Maintenance Manual

MG369xC Series
Synthesized Signal Generators

Anritsu Company
490 Jarvis Drive
Morgan Hill, CA 95037-2809
USA

Part Number: 10370-10376
Revision: B
Published: March 2012
Copyright 2012 Anritsu Company

Notes On Export Management

This product and its manuals may require an Export License or approval by the government of the product country of origin for re-export from your country.

Before you export this product or any of its manuals, please contact Anritsu Company to confirm whether or not these items are export-controlled.

When disposing of export-controlled items, the products and manuals need to be broken or shredded to such a degree that they cannot be unlawfully used for military purposes.

Trademark Acknowledgments

Windows, Windows XP, Microsoft Word, and Microsoft Excel are all registered trademarks of Microsoft Corporation.
Acrobat Reader is a registered trademark of Adobe Corporation.
NI is a trademark of the National Instruments Corporation.
Agilent is a trademark of Agilent Technologies
Dell is a trademark of Dell Computer Corporation

Notice

Anritsu Company has prepared this manual for use by Anritsu Company personnel and customers as a guide for the proper installation, operation and maintenance of Anritsu Company equipment and computer programs. The drawings, specifications, and information contained herein are the property of Anritsu Company, and any unauthorized use or disclosure of these drawings, specifications, and information is prohibited; they shall not be reproduced, copied, or used in whole or in part as the basis for manufacture or sale of the equipment or software programs without the prior written consent of Anritsu Company.

Updates

Updates, if any, can be downloaded from the Documents area of the Anritsu Website at:
http://www.anritsu.com

For the latest service and sales contact information in your area, please visit:
http://www.anritsu.com/contact.asp

Safety Symbols

To prevent the risk of personal injury or loss related to equipment malfunction, Anritsu Company uses the following symbols to indicate safety-related information. For your own safety, please read the information carefully *before* operating the equipment.

Symbols Used in Manuals

Danger

This indicates a very dangerous procedure that could result in serious injury or death, and possible loss related to equipment malfunction, if not performed properly.

Warning

This indicates a hazardous procedure that could result in light-to-severe injury or loss related to equipment malfunction, if proper precautions are not taken.

Caution

This indicates a hazardous procedure that could result in loss related to equipment malfunction if proper precautions are not taken.

Safety Symbols Used on Equipment and in Manuals

The following safety symbols are used inside or on the equipment near operation locations to provide information about safety items and operation precautions. Ensure that you clearly understand the meanings of the symbols and take the necessary precautions *before* operating the equipment. Some or all of the following five symbols may or may not be used on all Anritsu equipment. In addition, there may be other labels attached to products that are not shown in the diagrams in this manual.

This indicates a prohibited operation. The prohibited operation is indicated symbolically in or near the barred circle.

This indicates a compulsory safety precaution. The required operation is indicated symbolically in or near the circle.

This indicates a warning or caution. The contents are indicated symbolically in or near the triangle.

This indicates a note. The contents are described in the box.

These indicate that the marked part should be recycled.

Warning

Always refer to the operation manual when working near locations at which the alert mark, shown on the left, is attached. If the operation, etc., is performed without heeding the advice in the operation manual, there is a risk of personal injury. In addition, the equipment performance may be reduced.

Moreover, this alert mark is sometimes used with other marks and descriptions indicating other dangers.

Warning

or

When supplying power to this equipment, connect the accessory 3-pin power cord to a 3-pin grounded power outlet. If a grounded 3-pin outlet is not available, use a conversion adapter and ground the green wire, or connect the frame ground on the rear panel of the equipment to ground. If power is supplied without grounding the equipment, there is a risk of receiving a severe or fatal electric shock.

Warning

This equipment can not be repaired by the operator. Do not attempt to remove the equipment covers or to disassemble internal components. Only qualified service technicians with a knowledge of electrical fire and shock hazards should service this equipment. There are high-voltage parts in this equipment presenting a risk of severe injury or fatal electric shock to untrained personnel. In addition, there is a risk of damage to precision components.

Warning

Use two or more people to lift and move this equipment, or use an equipment cart. There is a risk of back injury if this equipment is lifted by one person.

Caution

Electrostatic Discharge (ESD) can damage the highly sensitive circuits in the instrument. ESD is most likely to occur as test devices are being connected to, or disconnected from, the instrument's front and rear panel ports and connectors. You can protect the instrument and test devices by wearing a static-discharge wristband. Alternatively, you can ground yourself to discharge any static charge by touching the outer chassis of the grounded instrument before touching the instrument's front and rear panel ports and connectors. Avoid touching the test port center conductors unless you are properly grounded and have eliminated the possibility of static discharge.

Repair of damage that is found to be caused by electrostatic discharge is not covered under warranty.

Table of Contents

Chapter 1—General Information

1-1 Scope of Manual . . . 1-1
1-2 Introduction . . . 1-1
1-3 Description . . . 1-1
1-4 Identification Number . . . 1-1
1-5 Online Manual . . . 1-1
1-6 Related Manuals . . . 1-2
Operation Manual . . . 1-2
GPIB Programming Manual . . . 1-2
SCPI Programming Manual . . . 1-2
1-7 Contacting Anritsu . . . 1-2
1-8 Options . . . 1-2
1-9 Level of Maintenance . . . 1-3
Preventive Maintenance . . . 1-3
Calibration . . . 1-3
Troubleshooting . . . 1-3
Repair . . . 1-3
1-10 ESD Requirements . . . 1-3
1-11 Preventive Maintenance . . . 1-3
1-12 Startup Configurations . . . 1-5
1-13 Test Equipment List . . . 1-6

Chapter 2—Functional Description

2-1 Introduction . . . 2-1
2-2 Major Subsystems . . . 2-1
Digital Control . . . 2-1
Front Panel Assembly . . . 2-1
Frequency Synthesis . . . 2-2
A9 YIG Assembly . . . 2-2
ALC/AM/Pulse Modulator . . . 2-2
RF Deck . . . 2-2
Power Supply . . . 2-2
Inputs/Outputs . . . 2-3
Motherboard/Interconnections . . . 2-3
2-3 Frequency Synthesis . . . 2-6
Phase Lock Loops . . . 2-6
Overall Operation . . . 2-6
RF Outputs 0.008 MHz to 70 GHz . . . 2-10
Frequency Modulation . . . 2-11
Phase Modulation . . . 2-11
Analog Sweep Mode . . . 2-11
Step Sweep Mode . . . 2-12

2-4 ALC/AM/Pulse Modulation . . . 2-12
ALC Loop Operation . . . 2-12
Pulse Generator Operation . . . 2-13
2-5 RF Deck Assemblies. . . . 2-14
RF Deck Configurations. . . . 2-14
YIG-tuned Oscillator . . . 2-14
RF Signal Filtering . . . 2-14
0.008 to 2 GHz Down Converter (Option 5). . . . 2-15
0.008 to 2.2 GHz Digital Down Converter (Option 4). . . . 2-15
Switched Doubler Module . . . 2-16
Source Quadrupler Module . . . 2-16
Step Attenuators . . . 2-17

Chapter 3—Performance Verification using N5531S Measuring Receiver

3-1 Introduction . . . 3-1
3-2 Test Records. . . . 3-1
3-3 Connector and Key Notation. . . . 3-1
3-4 Test Equipment List . . . 3-2
3-5 Measurement Uncertainty. . . . 3-6
Maximum Permissible Tolerance of Return Loss of Adapters, Attenuators and Cables . . . 3-6
3-6 Internal Time Base Aging Rate Test (Optional) . . . 3-9
Internal Time Base Aging Rate Test with Absolute Time Model 300. . . . 3-9
Internal Time Base Aging Rate Test with Symmetricom (Datum) Model 9390-9600 3-11
3-7 Spurious Signals Test. . . . 3-12
Harmonic Test Initial Setup . . . 3-12
Harmonic Test Procedure . . . 3-13
Non-Harmonic Test Initial Setup . . . 3-14
Non-Harmonic Test Procedure . . . 3-14
3-8 Single Sideband Phase Noise Test . . . 3-16
Test Setup . . . 3-17
Test Procedure . . . 3-18
3-9 Power Level Accuracy and Flatness. . . . 3-22
Power Level Log Conformity - Test Setup . . . 3-23
Power Level Log Conformity - Measurement . . . 3-25
Power Level Accuracy - Test Setup . . . 3-26
Power Level Accuracy - Measurement . . . 3-28
Power Level Flatness - Test Setup . . . 3-30
Power Level Flatness - Measurement . . . 3-32
Maximum Leveled Power - Test Setup . . . 3-33
Maximum Leveled Power - Measurement . . . 3-35
3-10 FM and ΦM Tests . . . 3-37
Test Methodology . . . 3-37
Test Setup - FM . . . 3-38
Locked FM Accuracy . . . 3-38
Internal FM Accuracy. . . . 3-40
ΦM Accuracy - Introduction . . . 3-42

Test Setup - ΦM Accuracy . . . 3-42
Wide External ΦM Accuracy at 5 GHz . . . 3-43
Narrow External ΦM Accuracy at 5 GHz . . . 3-43
Wide External ΦM Accuracy at 20 GHz . . . 3-44
Narrow External ΦM Accuracy at 20 GHz . . . 3-44
Wide Internal ΦM Accuracy at 5 GHz (Instruments with Internal ΦM) . . . 3-45
Narrow Internal ΦM Accuracy at 5 GHz (Instruments with Internal ΦM) . . . 3-45
Wide Internal ΦM Accuracy at 20 GHz (Instruments with Internal ΦM) . . . 3-46
Narrow Internal ΦM Accuracy at 20 GHz (Instruments with Internal ΦM) . . . 3-46
FM/ΦM Flatness and Bandwidth - Introduction . . . 3-47
Test Setup - FM/ΦM Flatness and Bandwidth . . . 3-47
Locked FM Flatness . . . 3-47
Narrow ΦM Flatness . . . 3-48
Wide ΦM Flatness . . . 3-50
Modulation Index Calculations . . . 3-51
Unlocked Narrow FM Accuracy . . . 3-53

3-11 Amplitude Modulation Tests . . . 3-55
External AM Accuracy - Test Setup . . . 3-56
External AM Accuracy - Measurement . . . 3-57
Internal AM Accuracy - Test Setup . . . 3-59
Internal AM Accuracy - Measurement . . . 3-60
External AM Flatness - Test Setup . . . 3-61
External AM Flatness - Measurement . . . 3-63

3-12 Pulse Modulation Tests . . . 3-65
Test Setup . . . 3-65
Pulse Rise Time, Fall Time and Overshoot Measurement . . . 3-66
Pulse Power Accuracy Measurement . . . 3-68
Pulse On/Off Ratio . . . 3-70

Chapter 4—Performance Verification using Standard Test Equipment

4-1 Introduction . . . 4-1

4-2 Automated Procedure . . . 4-1

4-3 Test Records . . . 4-1

4-4 Connector and Key Notation . . . 4-2

4-5 Test Equipment List . . . 4-2

4-6 Measurement Uncertainty . . . 4-7

4-7 Internal Time Base Aging Rate Test (Optional) . . . 4-7
Internal Time Base Aging Rate Test with Absolute Time Model 300 . . . 4-8
Internal Time Base Aging Rate Test with Symmetricom (Datum) Model 9390-9600 . . . 4-9

4-8 Spurious Signals Tests . . . 4-10
Harmonic Test Setup . . . 4-10
Harmonic Test Procedure . . . 4-11
Non-Harmonic Test Setup . . . 4-12
Non-Harmonic Test Procedure . . . 4-12

4-9 Single Sideband Phase Noise Test . . . 4-14
Test Setup . . . 4-14

Test Procedure 4-16
4-10 Power Level Accuracy and Flatness Tests 4-19
Initial Test Setup 4-19
Power Level Log Conformity 4-20
Power Level Accuracy (≥ –50 dBm) 4-21
Power Level Accuracy (< –50 dBm) 4-22
Power Level Flatness 4-25
Maximum Leveled Power 4-27
4-11 FM and ΦM Tests 4-29
Initial Test Setup 4-29
Locked FM Accuracy - Introduction 4-30
Locked External FM Accuracy at 5 GHz 4-30
Locked Low-Noise External FM Accuracy at 5 GHz 4-30
Locked External FM Accuracy at 20 GHz 4-31
Locked Low-Noise External FM Accuracy at 20 GHz 4-31
Locked Internal FM Accuracy at 5 GHz (Instruments with internal FM) 4-31
Locked Low-Noise Internal FM Accuracy at 5 GHz (Instruments with internal FM) 4-32
Locked Internal FM Accuracy at 20 GHz (Instruments with internal FM) 4-32
Locked Low-Noise Internal FM Accuracy at 20 GHz (Instruments with internal FM) 4-33
ΦM Accuracy - Introduction 4-33
Wide External ΦM Accuracy at 5 GHz. 4-33
Narrow External ΦM Accuracy at 5 GHz 4-34
Wide External ΦM Accuracy at 20 GHz. 4-34
Narrow External ΦM Accuracy at 20 GHz 4-35
Wide Internal ΦM Accuracy 5 GHz (Instruments with internal ΦM). 4-35
Narrow Internal ΦM Accuracy at 5 GHz (Instruments with internal ΦM) 4-35
Wide Internal ΦM Accuracy at 20 GHz (Instruments with internal ΦM). 4-36
Narrow Internal ΦM Accuracy at 20 GHz (Instruments with internal ΦM) 4-36
FM/ΦM Flatness and Bandwidth 4-37
Initial Test Setup 4-37
Locked FM Flatness 4-37
Narrow ΦM Flatness 4-38
Wide ΦM Flatness 4-39
Modulation Index Calculations 4-40
Unlocked Narrow FM Accuracy 4-42
4-12 Amplitude Modulation Tests 4-44
Test Setup 4-44
External AM Accuracy 4-45
Internal AM Accuracy. 4-46
AM Roll Off 4-47
AM Flatness. 4-49
4-13 Pulse Modulation Tests. 4-51
Test Setup 4-51
Pulse Rise Time, Fall Time and Overshoot 4-52
Pulse Power Accuracy. 4-54
Pulse On/Off Ratio. 4-56

Chapter 5—Calibration

5-1 Introduction 5-1

5-2 Test Equipment List 5-1

5-3 Test Records 5-5

5-4 Subassembly Replacement 5-5

5-5 Connector and Key Notation. 5-6

5-6 Initial Setup 5-6
- Interconnection 5-6
- PC Setup 5-7

5-7 Preliminary Calibration 5-9
- Equipment Setup 5-9
- Calibration Steps 5-9
- Alternate 10 MHz Reference Oscillator Calibration 5-11

5-8 Frequency Synthesis Tests 5-12
- Test Setup 5-13
- Coarse Loop/YIG Loop 5-13
- Fine Loop. 5-13

5-9 Switched Filter Shaper 5-15
- Equipment Setup 5-15
- Log Amplifier Zero Calibration 5-16
- Limiter DAC Adjustment 5-16
- Shaper DAC Adjustment 5-17

5-10 RF Level Calibration 5-18
- Equipment Setup 5-22

5-11 ALC Bandwidth Calibration 5-23
- Equipment Setup 5-23
- Bandwidth Calibration 5-23

5-12 ALC Slope Calibration (Option 6 only) 5-24
- Equipment Setup 5-24
- ALC Slope DAC Adjustment (only for units with Option 6 Analog Sweep) 5-25

5-13 AM Calibration 5-27
- Equipment Setup 5-27
- AM Calibration Procedure 5-28

5-14 FM and ΦM Calibration. 5-30
- Equipment Setup 5-30
- FM Calibration Procedure 5-31

Chapter 6—Troubleshooting

6-1 Introduction 6-1
6-2 Test Equipment List 6-1
6-3 Error Messages. 6-1
Self-Test Error Messages 6-1
Normal Operation Error and Warning/Status Messages 6-4
6-4 No Error Message. 6-6
6-5 Troubleshooting Tables 6-7

Chapter 7—Removal and Replacement Procedures

7-1 Introduction 7-1
7-2 Replaceable Parts. 7-1
7-3 Chassis Covers. 7-6
Tool Required 7-6
Preliminary. 7-6
Procedure 7-6
7-4 Front Panel Assembly. 7-8
Preliminary. 7-8
Procedure 7-8
7-5 A2 Microprocessor PCB Board 7-9
Preliminary. 7-9
Procedure 7-9
7-6 A3 Reference/Fine Loop PCB. 7-10
Preliminary. 7-10
Procedure 7-10
7-7 A4 Coarse Loop PCB 7-11
Preliminary. 7-11
Procedure 7-11
7-8 A5 to A9 PCB Removal. 7-13
Preliminary. 7-13
Card Cage Cover Removal 7-13
A5 Auxiliary PCB 7-14
A6 ALC PCB 7-14
A7 YIG Lock PCB 7-15
A9 YIG Assembly. 7-15
Card Cage Cover Installation. 7-15
7-9 Power Supply Assembly 7-17
Preliminary. 7-17
Power Supply Top Assembly. 7-17
12 Volt Standby Power Supply PCB 7-19
A20 Power Supply Regulator. 7-20

Appendix A—Test Records (N5531S Test Equipment)

A-1 Introduction A-1
A-2 Uncertainty Specifications A-1
A-3 Adapter, Attenuator and Cable Insertion Loss A-1
A-4 Test Record History A-1
Section 3-6 Internal Time Base Aging Rate Test (Optional) A-2
Section 3-7 Harmonic Testing (No Opt. 15) A-3
Section 3-7 Harmonic Testing (+Opt. 15) A-6
Section 3-7 Non-Harmonic Testing (Part 1) A-8
Section 3-7 Non-Harmonic Testing (Part2) A-11
Section 3-7 Non-Harmonic Testing (Footnote Reference) A-14
Section 3-8 SSB Phase Noise (S/N 103313 and Lower) (No Opt. 3 or 3x) A-15
Section 3-8 SSB Phase Noise: Power Line & Fan (S/N 103313 and Lower) A-19
Section 3-8 SSB Phase Noise (S/N 103313 and Lower) (+ Opt. 3) A-21
Section 3-8 SSB Phase Noise: Power Line & Fan (S/N 103313 and Lower) (+ Opt. 3) . . A-25
Section 3-8 SSB Phase Noise (S/N 103313 and Lower) (+ Opt. 3x) A-27
Section 3-8 SSB Phase Noise: Power Line & Fan (S/N 103313 and Lower) (+ Opt. 3x) . A-31
Section 3-8 SSB Phase Noise (S/N 103314 and Higher) (No Opt. 3 or 3x) A-33
Section 3-8 SSB Phase Noise: Power Line & Fan (S/N 103314 and Higher) A-37
Section 3-8 SSB Phase Noise (S/N 103314 and Higher) (+ Opt. 3) A-39
Section 3-8 SSB Phase Noise: Power Line & Fan (S/N 103314 and Higher) (+ Opt. 3) . . A-43
Section 3-8 SSB Phase Noise (S/N 103314 and Higher) (+ Opt. 3x) A-45
Section 3-8 SSB Phase Noise: Power Line & Fan (S/N 103314 and Higher) (+ Opt. 3x) . A-49
Section 3-9 Power Level Log Conformity (Non-pulse Mode) A-51
Section 3-9 Power Level Log Conformity (Pulse Mode) A-53
Section 3-9 Power Level Log Conformity (Non-pulse Mode) (MG3695C Only) A-55
Section 3-9 Power Level Log Conformity (Pulse Mode - MG3695C Only) A-57
Section 3-9 Power Level Accuracy Test - Introduction A-59
Section 3-9 Power Level Accuracy Test (10 MHz) A-60
Section 3-9 Power Level Accuracy Test (15 MHz) A-61
Section 3-9 Power Level Accuracy Test (60 MHz) A-62
Section 3-9 Power Level Accuracy Test (500 MHz) A-63
Section 3-9 Power Level Accuracy Test (600 MHz) A-64
Section 3-9 Power Level Accuracy Test (1.0 GHz) A-65
Section 3-9 Power Level Accuracy Test (2.0 GHz) A-66
Section 3-9 Power Level Accuracy Test (4.0 GHz) A-67
Section 3-9 Power Level Accuracy Test (6.0 GHz) A-68
Section 3-9 Power Level Accuracy Test (8.0 GHz) A-69
Section 3-9 Power Level Accuracy Test (10.0 GHz) A-70
Section 3-9 Power Level Accuracy Test (12.0 GHz) A-71
Section 3-9 Power Level Accuracy Test (14.0 GHz) A-72
Section 3-9 Power Level Accuracy Test (16.0 GHz) A-73
Section 3-9 Power Level Accuracy Test (18.0 GHz) A-74
Section 3-9 Power Level Accuracy Test (20.0 GHz) A-75
Section 3-9 Power Level Accuracy Test (22.0 GHz) A-76
Section 3-9 Power Level Accuracy Test (24.0 GHz) A-77

Section 3-9 Power Level Accuracy Test (26.0 GHz) A-78
Section 3-9 Power Level Accuracy Test (28.0 GHz) A-79
Section 3-9 Power Level Accuracy Test (30.0 GHz) A-80
Section 3-9 Power Level Accuracy Test (32.0 GHz) A-81
Section 3-9 Power Level Accuracy Test (34.0 GHz) A-82
Section 3-9 Power Level Accuracy Test (36.0 GHz) A-83
Section 3-9 Power Level Accuracy Test (38.0 GHz) A-84
Section 3-9 Power Level Accuracy Test (40.0 GHz) A-85
Section 3-9 Power Level Accuracy Test - MG3695C Only - Introduction A-86
Section 3-9 Power Level Accuracy Test - MG3695C Only (10 MHz) A-87
Section 3-9 Power Level Accuracy Test - MG3695C Only (15 MHz) A-88
Section 3-9 Power Level Accuracy Test - MG3695C Only (60 MHz) A-89
Section 3-9 Power Level Accuracy Test - MG3695C Only (500 MHz) A-90
Section 3-9 Power Level Accuracy Test - MG3695C Only (600 MHz) A-91
Section 3-9 Power Level Accuracy Test - MG3695C Only (1.0 GHz) A-92
Section 3-9 Power Level Accuracy Test - MG3695C Only (2.0 GHz) A-93
Section 3-9 Power Level Accuracy Test - MG3695C Only (4.0 GHz) A-94
Section 3-9 Power Level Accuracy Test - MG3695C Only (6.0 GHz) A-95
Section 3-9 Power Level Accuracy Test - MG3695C Only (8.0 GHz) A-96
Section 3-9 Power Level Accuracy Test - MG3695C Only (10.0 GHz) A-97
Section 3-9 Power Level Accuracy Test - MG3695C Only (12.0 GHz) A-98
Section 3-9 Power Level Accuracy Test - MG3695C Only (14.0 GHz) A-99
Section 3-9 Power Level Accuracy Test - MG3695C Only (16.0 GHz) A-100
Section 3-9 Power Level Accuracy Test - MG3695C Only (18.0 GHz) A-101
Section 3-9 Power Level Accuracy Test - MG3695C Only (20.0 GHz) A-102
Section 3-9 Power Level Accuracy Test - MG3695C Only (22.0 GHz) A-103
Section 3-9 Power Level Accuracy Test - MG3695C Only (24.0 GHz) A-104
Section 3-9 Power Level Accuracy Test - MG3695C Only (26.0 GHz) A-105
Section 3-9 Power Level Accuracy Test - MG3695C Only (28.0 GHz) A-106
Section 3-9 Power Level Accuracy Test - MG3695C Only (30.0 GHz) A-107
Section 3-9 Power Level Accuracy Test - MG3695C Only (32.0 GHz) A-108
Section 3-9 Power Level Accuracy Test - MG3695C Only (34.0 GHz) A-109
Section 3-9 Power Level Accuracy Test - MG3695C Only (36.0 GHz) A-110
Section 3-9 Power Level Accuracy Test - MG3695C Only (38.0 GHz) A-111
Section 3-9 Power Level Accuracy Test - MG3695C Only (40.0 GHz) A-112
Section 3-9 Power Level Accuracy Test - MG3695C Only (50.0 GHz) A-113
Section 3-9 Power Level Flatness Test (No Opt.2) A-114
Section 3-9 Power Level Flatness Test (No Opt.2) A-115
Section 3-9 Power Level Flatness Test (+ Opt.2) A-117
Section 3-9 Power Level Flatness Test (+ Opt.2) A-118
Section 3-9 Maximum Leveled Power Test (No Opt. 15) A-120
Section 3-9 Maximum Leveled Power Test (+ Opt. 15, No Opt. 4, 5) A-123
Section 3-9 Maximum Leveled Power Test (+ Opt. 15, + Opt. 4, 5) A-126
Section 3-10 Frequency Modulation Tests (+ Opt.12 or 28x) A-129
Section 3-10 Frequency Modulation Tests (+ Opt.12 or 28x) A-130
Section 3-10 Frequency Modulation Tests (+ Opt.12 or 28x) A-131
Section 3-10 Frequency Modulation Tests (+ Opt.12 or 28x) A-132
Section 3-10 Frequency Modulation Tests (+ Opt.12 or 28x) A-133

Section 3-11 Amplitude Modulation Test (+ Opt. 14 or 28x) A-135
Section 3-12 Pulse Modulation Tests (+ Opt. 26x or 27). A-138
Section 5-7 Preliminary Calibration A-141
Section 5-8 Frequency Synthesis Test (1 of 3) A-142
Section 5-9 Switched Filter Shaper Calibration A-145
Section 5-10 RF Level Calibration. A-145
Section 5-11 ALC Bandwidth Calibration A-145
Section 5-12 ALC Slope Calibration A-145
Section 5-13 AM Calibration A-146
Section 5-14 FM Calibration A-146

Appendix B—Test Records (Standard Test Equipment)

B-1 Introduction. B-1
B-2 Uncertainty Specifications B-1
B-3 Test Records B-1
Section 4-7 Internal Time Base Aging Rate Test (Optional) B-2
Section 4-8 Harmonic Testing (Models without Opt. 15). B-3
Section 4-8 Harmonic Testing (Models with Opt. 15) B-5
Section 4-8 Non-Harmonic Testing (Part1) B-7
Section 4-8 Non-Harmonic Testing (Part 2) B-10
Section 4-8 Non-Harmonic Testing (Footnote Reference) B-12
Section 4-9 SSB Phase Noise (S/N 103313 and Lower) (No Opt. 3 or 3x). B-13
Section 4-9 SSB Phase Noise: Power Line & Fan (S/N 103313 and Lower) B-17
Section 4-9 SSB Phase Noise (S/N 103313 and Lower) (+ Opt. 3) B-19
Section 4-9 SSB Phase Noise: Power Line & Fan (S/N 103313 and Lower) (+ Opt. 3) . . B-23
Section 4-9 SSB Phase Noise (S/N 103313 and Lower) (+ Opt. 3x). B-25
Section 4-9 SSB Phase Noise: Power Line & Fan (S/N 103313 and Lower) (+ Opt. 3x) . B-29
Section 4-9 SSB Phase Noise (S/N 103314 and Higher) (No Opt. 3 or 3x) B-31
Section 4-9 SSB Phase Noise: Power Line & Fan (S/N 103314 and Higher). B-35
Section 4-9 SSB Phase Noise (S/N 103314 and Higher) (+ Opt. 3) B-37
Section 4-9 SSB Phase Noise: Power Line & Fan (S/N 103314 and Higher) (+ Opt. 3). . B-41
Section 4-9 SSB Phase Noise (S/N 103314 and Higher) (+ Opt. 3x) B-43
Section 4-9 SSB Phase Noise: Power Line & Fan (S/N 103314 and Higher) (+ Opt. 3x). B-47
Section 4-10 Power Level Log Conformity Test B-49
Section 4-10 Power Level Accuracy Test (No Opt. 2). B-51
Section 4-10 Power Level Flatness Test (No Opt. 2) B-65
Section 4-10 Maximum Leveled Power Test. B-69
Section 4-11 Frequency Modulation Tests (+ Opt. 12 or 28x). B-76
Section 4-12 Amplitude Modulation Test (+ Opt. 14 or 28x) B-82
Section 4-13 Pulse Modulation Tests (+ Opt. 26x or 27). B-86
Section 5-7 Preliminary Calibration B-89
Section 5-8 Frequency Synthesis Test (1 of 3) B-90
Section 5-9 Switched Filter Shaper Calibration B-93
Section 5-10 RF Level Calibration. B-93
Section 5-11 ALC Bandwidth Calibration B-93
Section 5-12 ALC Slope Calibration B-93
Section 5-13 AM Calibration B-94
Section 5-14 FM Calibration B-94

Appendix C—Technical Data Sheet

C-1 MG369xC Technical Data Sheet C-1

Index

Chapter 1 — General Information

1-1 Scope of Manual

This manual provides service information for the model MG369xC Signal Generators. The service information includes replaceable parts information, troubleshooting, performance verification tests, calibration procedures, functional circuit descriptions and block diagrams, and assembly/subassembly removal and replacement.

Performance verification tests are included in two separate chapters to accommodate separate test equipment configurations: Chapter 3 provides test procedures using the Agilent N5531S Measuring Receiver, among other standard test equipment. Chapter 4 provides test procedures using standard test equipment. There are two separate test record appendices, each associated with its respective performance verification chapter.

Throughout this manual, the terms *MG369xC* or *synthesizer* are used to refer to the instrument. Otherwise, the full model number is used where applicable. Manual organization is shown in the table of contents.

1-2 Introduction

This chapter provides a general description of the MG369xC identification numbers, related manuals, and options. Information is included concerning level of maintenance, replaceable subassemblies and RF components, exchange assembly program, and preventive maintenance. Static-sensitive component handling precautions and lists of exchangeable subassemblies and recommended test equipment are also provided.

1-3 Description

The series MG369xC is a microprocessor-based, synthesized signal source with high resolution phase-lock capability. It generates both discrete CW frequencies and broad (full range) and narrow band step sweeps across the frequency range of 2 GHz to 70 GHz.

Options are available to extend the low end of the frequency range to 0.1 Hz. All functions of the CW generator are fully controllable locally from the front panel or remotely (except for power on/standby) via the IEEE-488 General Purpose Interface Bus (GPIB). The technical data sheet in Appendix B of the printed version of this manual contains a list of all models and specifications. This data sheet (PN: 11410-00515) is also available online. Updates to this manual and the technical data sheet, if any, may be downloaded from the Anritsu Internet site at: http://www.anritsu.com.

1-4 Identification Number

All Anritsu instruments are assigned a unique six-digit ID number, such as “050101.” The ID number is imprinted on a decal that is affixed to the rear panel of the instrument. Special-order instrument configurations also have an additional special number tag attached to the rear panel of the instrument, such as SM1234.

When ordering parts or corresponding with Anritsu customer service, please use the correct serial number with reference to the specific instrument’s model number (i.e., model MG3692C Signal Generator, Serial No. 050101, and the special’s number, if appropriate).

1-5 Online Manual

This manual is available on CD ROM as an Adobe Acrobat Portable Document Format (*.pdf) file. The file can be viewed using Acrobat Reader, a free program that is also included on the CD ROM. The file is “linked” such that the viewer can choose a topic to view from the displayed “bookmark” list and “jump” to the manual page on which the topic resides. The text can also be searched.

1-6 Related Manuals

This is one of a four manual set that consists of an operation manual, a GPIB programming manual, a SCPI programming manual, and this maintenance manual.

Operation Manual

The operation manual provides instructions for operating the MG369xC using the front panel controls. It also includes general information, performance specifications, installation instructions, and operation verification procedures. The Anritsu part number for the model MG369xC Operation Manual is 10370-10373.

GPIB Programming Manual

The GPIB programming manual provides information for remotely operating the MG369xC using product specific commands sent from an external controller via the IEEE 488 General Purpose Interface Bus (GPIB). It contains a complete listing and description of all MG369xC GPIB product specific commands and several programming examples. The Anritsu part number for the model MG369xC GPIB Programming Manual is 10370-10374.

SCPI Programming Manual

The SCPI programming manual provides information for remotely operating the MG369xC using Standard Commands for Programmable Instruments (SCPI) commands. SCPI commands are a set of standard programming commands for use by all SCPI compatible instruments. SCPI is intended to give the ATE user a consistent environment for program development. It does so by defining controller messages, instrument responses, and message formats for all SCPI compatible instruments. The IEEE-488 (GPIB) interface for the MG369xC was designed to conform to the requirements of SCPI 1993.0. The set of SCPI commands implemented by the MG369xC GPIB interface provides a comprehensive set of programming functions covering all the major functions of the MG369xC signal generator. The Anritsu part number for the model MG369xC SCPI Programming Manual is 10370-10375.

1-7 Contacting Anritsu

To contact Anritsu, please visit:

http://www.anritsu.com/contact.asp

From here, you can select the latest sales, select service and support contact information in your country or region, provide online feedback, complete a "Talk to Anritsu" form to have your questions answered, or obtain other services offered by Anritsu.

Updated product information can be found on the Anritsu web site:

http://www.anritsu.com/

Search for the product model number. The latest documentation is on the product page under the Library tab.

Example URL for MS2035B:

http://www.anritsu.com/en-us/products-solutions/products/MS2035B.aspx

1-8 Options

The options available for the Anritsu MG369xC series signal generators are described in the technical data sheet (PN: 11410-00515), located in Appendix B of the print manual and online at the Anritsu web site:

http://www.anritsu.com

1-9 Level of Maintenance

Maintenance of the MG369xC consists of:

- Preventive maintenance
- Calibration
- Troubleshooting the instrument to a replaceable subassembly or RF component
- Repair by replacing the failed subassembly or RF component.

Preventive Maintenance

Preventive maintenance on the MG369xC consists of cleaning the fan honeycomb filter, described in Section 1-11.

Calibration

The MG369xC may require calibration after repair. Refer to Chapter 5, "Calibration" for a listing of requirements and procedures.

Troubleshooting

The MG369xC firmware includes internal diagnostics that self-test most of the internal assemblies. When the MG369xC fails self-test, one or more error messages appear on screen to aid in isolating the failure to a replaceable subassembly or RF component. Chapter 6, "Troubleshooting" lists and describes the self-test error messages and provides procedures for isolating MG369xC failures to a replaceable subassembly or RF component.

Repair

Most instrument failures are field repairable by replacing the failed subassembly or RF component. Detailed instructions for removing and replacing failed subassemblies and components are provided in Chapter 7, "Removal and Replacement Procedures".

1-10 ESD Requirements

The MG369xC contains components that can be easily damaged by electrostatic discharge (ESD). An ESD safe work area and proper ESD handling procedures that conform to ANSI/ESD S20.20-1999 or ANSI/ESD S20.20-2007 is mandatory to avoid ESD damage when handling subassemblies or components found in the MG369xC instrument.

1-11 Preventive Maintenance

The MG369xC must always receive adequate ventilation. A blocked fan filter can cause the instrument to overheat and shut down. Check and clean the rear panel fan honeycomb filter periodically, especially in dusty environments. Clean the filter as follows.

1. Turn off the synthesizer and disconnect the power cord from the instrument.
2. Use a #3 screwdriver to remove the four screws that fasten the filter guard to the rear panel (see Figure 1-1). Retain the screws for reassembly.
3. Vacuum the honeycomb filter to clean it.
4. Reinstall the filter guard.
5. Fasten the filter guard to the rear panel using the four screws that were removed in step 1.

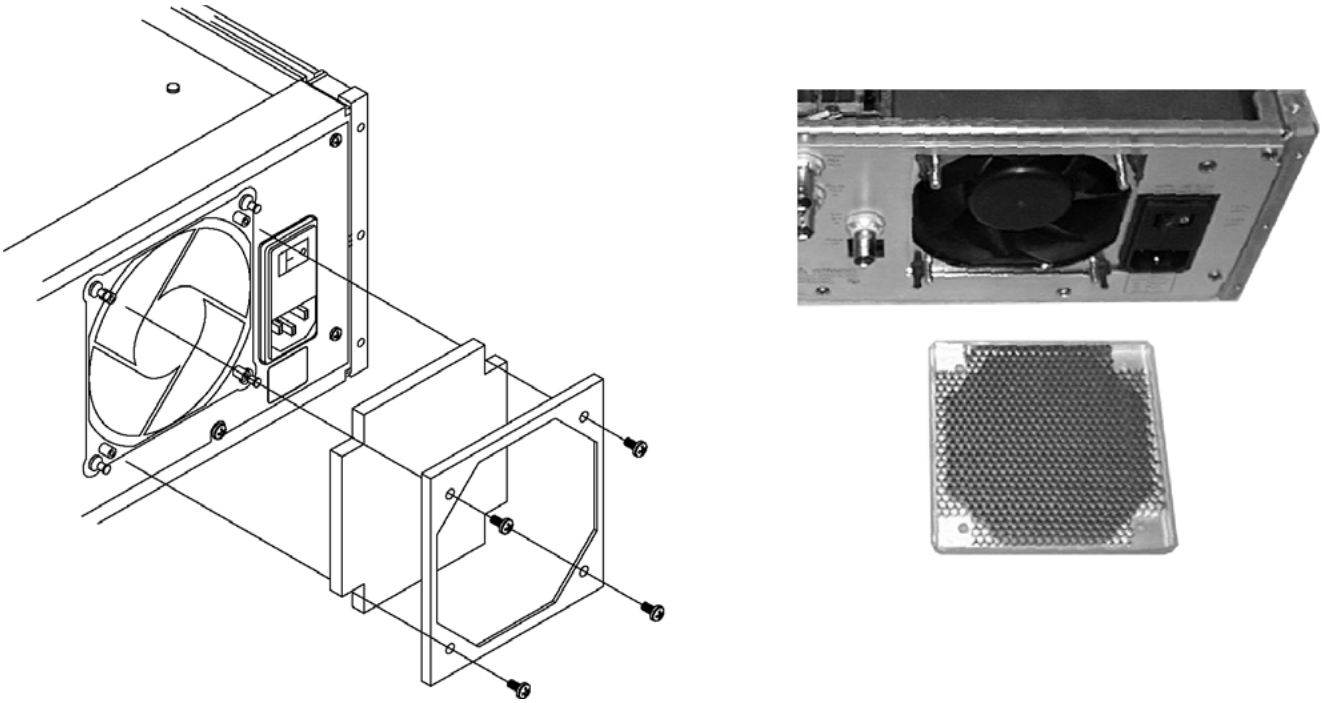

Figure 1-1. Removal/Replacement of the Fan Filter Guard

1-12 Startup Configurations

The MG369xC comes from the factory with a jumper across pins 2 and 3 of the A2 microprocessor PCB connector JP1 (see Figure 1-2). In this configuration, connecting the instrument to line power automatically places it in operate mode (front panel OPERATE LED on).

The startup configuration can be changed so that the signal generator comes up in standby mode (front panel STANDBY LED on) when it is connected to line power. Change the startup configuration as follows:

1. Disconnect the instrument from line power.
2. Remove the top cover from the MG369xC by following the instructions in Section 7-3.
3. Remove the A2 PCB cover by following the instructions in Section 7-5.
4. On A2 PCB, locate connector JP1.
5. Remove the jumper from across pins 2 and 3 and install it across pins 1 and 2 of JP1.
6. Install the top covers and connect the signal generator to line power.

   The instrument should power up to standby mode.

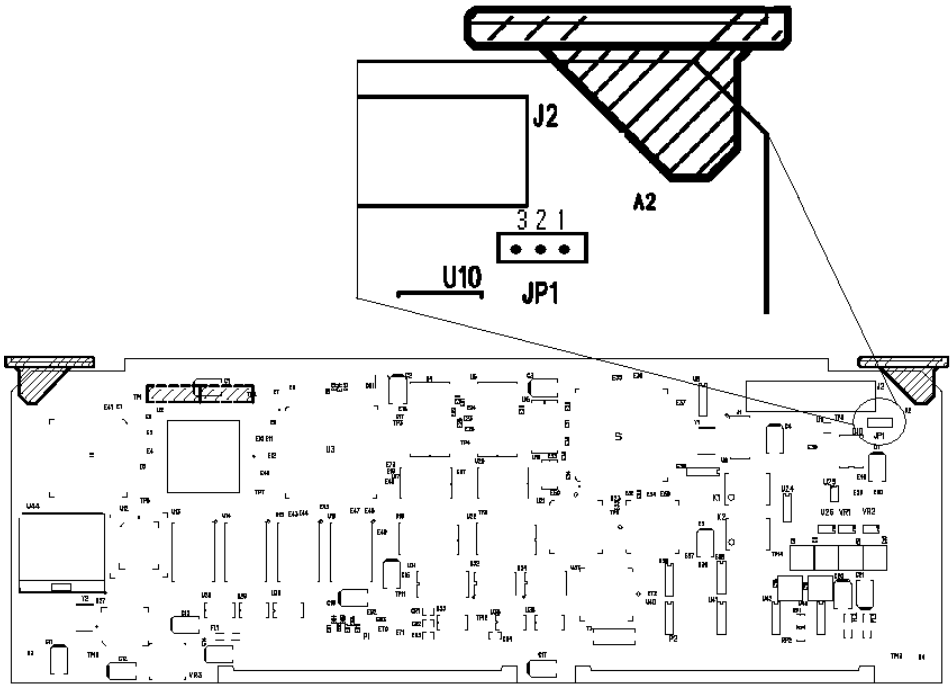

Figure 1-2. Startup Configuration of A2 Connector JP1

1-13 Test Equipment List

Table 1-1 provides a list of the test equipment used for the performance verification tests and adjustments of the instrument. The test equipment setup is critical to making accurate measurements. In some cases, you may substitute certain test equipment having the same critical specifications as the test equipment indicated in the test equipment list (refer to "Measurement Uncertainty" on page 4-7).

Table 1-1. Test Equipment List (1 of 6)

Instrument	Critical Specification	Manufacturer/Model	Test Application[a]	Test Equipment Usage[b]
Computer running Windows XP	Can not exceed the following configuration: Pentium 4 2.8 GHz 1 GB RAM 2 Serial ports CDROM Mouse Keyboard Monitor Network The computer must be dedicated during calibration and verification activities.	Dell or other common source	C, P	S, N
Phase noise measurement system	Frequency range: 5 MHz to 26.5 GHz	Agilent Phase Noise Station: Anritsu K222B Insertable F-F Anritsu 34NKF50 N Male to K Female Adapter Anritsu K241C Power Splitter Anritsu SC3855 3670K50-2 KM-KM flex cable Agilent E5052B Signal Source Analyzer Agilent E5053A Down Converter Two Anritsu K120MM-20CM Semi ridged cables Two Anritsu K120MM0-20CM Semi ridged cables (will need to be bent on site to fit Optical Mouse, PS2/USB for E5052B USB Keyboard for E5052B	P	S, N

Table 1-1. Test Equipment List (2 of 6)

Instrument	Critical Specification	Manufacturer/Model	Test Application[a]	Test Equipment Usage[b]
National Instrument PCI GPIB card	PCI GPIB card for computer	National Instrument	C, P	S, N
Anritsu RF verification and calibration software		Anritsu 2300-497	C, P	S
Spectrum Analyzer	Frequency: 100 kHz to 50 GHz Resolution bandwidth: 10 Hz	Agilent 8565EC	C, P	S
Modulation analyzer	AM and FM measurement capability to > 500 MHz and –20 dBm	HP8901A	P	S
Frequency counter *For use in calibration and performance verification.* *For use with performance verification only.*	 Frequency range: 0.01 to 20 GHz Input impedance: 50 ohms Resolution: 1 Hz Other: External time base input Frequency range: 0.01 to 6 GHz Input impedance: 50 ohms Resolution: 1 Hz Other: External time base input	 For calibration and performance verification the recommendation is Anritsu model MF2414B For performance verification the recommendation is Anritsu model MF2412B	C, P	S, N
Power meter	Frequency: 100 kHz to 67 GHz Power range: –70 to +20 dBm	Anritsu model ML2437A/38A	C, P	S
Power sensor for power meter	Frequency: 0.01 GHz to 40 GHz (K) Connector Power range: –70 to +20 dBm	Anritsu model MA2474D	C, P	S
Power sensor for power meter	Frequency: 0.01 GHz to 50 GHz (V) Connector Power range: –70 to +20 dBm	Anritsu model MA2475D	C, P	S
Power sensor for power meter	Frequency: 0.01 GHz to 67 GHz (V) Connector Power range: –30 to +20 dBm	Anritsu model SC7430 **or** Anritsu model SC7570	C, P	S
Power sensor for power meter	Frequency:100 kHz to 18 GHz (N) Connector Power range: –55 +20 dBm	Anritsu model SC7400	C, P	S
Adapter for power sensor calibration	N(m) to K(f)	Anritsu model 34NKF50	C, P	S
Adapters for power sensor calibration	N(m) to V(f)	Common source **or** Alternate to achieve N(m) to V(f): Anritsu model 34NK50 + 34VKF50 **or** Anritsu model 34NKF50 + 34VK50	C, P	S
Special AUX I/O cable assembly	Provides interface between the MG369xC and the power meter	Anritsu PN: 806-97	P	S

Table 1-1. Test Equipment List (3 of 6)

Instrument	Critical Specification	Manufacturer/Model	Test Application[a]	Test Equipment Usage[b]
Digital multimeter	Minimum 1% RMS ACV accuracy at 100 kHz	Fluke 8840A or Agilent 34401A	P	S, N
Function generator	Frequency: 0.1 Hz to 15 MHz	Agilent 33120A	C, P	S, N
Digital sampling oscilloscope	Frequency: 50 GHz	Agilent 86100A with 83484A 50 GHz module	P	S, N
Frequency reference	Frequency: 10 MHz Accuracy: 5 x 10^{-12} parts/day	Absolute Time Corp., model 300 **or** Symmetricom (Datum) model 9390-9600	C, P	S, N
Measuring receiver See footnote [c]	Noise floor: < –140 dBm @ 500 MHz	Anritsu model ML2530A	C, P	S
Local oscillator	Frequency: 0.01 to 40 GHz	Anritsu Model MG3694C with options: 3, 4, and 16 (unit must not have options 2B, 15B, or 22) **Note:** If the T2579 mixer box is ordered, then special SM6191 must be added to the LO.	C, P	S
Mixer	Frequency range: 500 MHz to 40 GHz Conversion loss: 10 dBm (typical)	Anritsu PN: 60-114	P	S
K(m) to K(m) Adapter	K(m) to K(m) connectors	Anritsu PN: K220B	P	S
Mixer box (for low level calibration) See footnote [c]	Frequency range: 0.01 GHz to 40 GHz	Anritsu PN: T2579	C, P	S
Low pass filter (Qty = 2) See footnote [c]	1.9 GHz LPF	Mini-Circuits BPL-1.9 **or** Anritsu PN: 1030-104	C, P	S
Scalar network analyzer with RF detector	Frequency: 0.01 to 40 GHz	Anritsu model 56100A with RF detector: 560-7K50 (0.01 to 40 GHz) **or** 560-7VA50 (0.01 to 50 GHz)	C, P, T	N/A
AUX I/O interface cable (for Scalar network analyzer)	Provides interface between the instrument under test and the 56100A Scalar Network Analyzer	Anritsu PN: 806-7	C	N/A

Table 1-1. Test Equipment List (4 of 6)

Instrument	Critical Specification	Manufacturer/Model	Test Application[a]	Test Equipment Usage[b]
Attenuator for instrument model numbers MG3691C through MG3694C	Frequency range: DC to 40 GHz Attenuation: 3, 6, 10, and 20 dB (Sizes and counts are determined depending on options and maximum output power of instrument.)	Anritsu part number SC7879 K set of attenuators (41KC-3, 41KC-6, 41KC-10, 41KC-20) (Must be calibrated - See footnote [d]) **or** Anritsu, model 41KC-3, 41KC-6, 41KC-10 or 41KC-20 (Must be calibrated - See footnote [d])	C, P	S, N
Attenuator for instrument model numbers MG3695C through MG3697C	Frequency Range: DC to 65 GHz Attenuation: 3, 6, 10, and 20 dB (Sizes and counts are determined depending on options and maximum output power of instrument.)	Anritsu part number SC7880 V set of attenuators (41V-3, 41V-6, 41V-10, 41V-20) (Must be calibrated - See footnote [e]) **or** Anritsu, model 41V-3, 41V-6, 41V-10 and 41V-20 (Must be calibrated - See footnote [e])	C, P	S, N
BNC Tee	Connectors: 50 Ohm BNC	Any common source	C, P	S, N
Generic 50 Ohm BNC RF cables and connectors		Any common source	C, P	S, N
Generic GPIB cables		Any common source	C, P	S, N
BNC to SMA adapter	BNC to SMA Adapter	Any common source	P	S, N
Armored Semi Rigid Test Port Cable K(m) to K(m) or semi-rigid cables	K(m) to K(m) flex cables **or** Semi-rigid cables	Anritsu SC3855 K(m) to K(m) flex cable (Must be calibrated - See footnote [d] [f]) **or** Anritsu K120mm-60CM custom semi-rigid cable (Must be calibrated - See footnote [d] [f]	C, P	S
Anritsu Cal Data Save/Recall software		Anritsu P/N 2300-478	C	N/A
Special Serial I/O Cable Assembly	Provides interface between the MG369xC and the PC	Anritsu P/N: T1678	C, P	S, N

Table 1-1. Test Equipment List (5 of 6)

Instrument	Critical Specification	Manufacturer/Model	Test Application[a]	Test Equipment Usage[b]
N5531S which contains: AT-E4448A PSA Spectrum Analyzer 3 Hz -50 GHz with Options: AT-E4448A-107 Audio input 100 kOhm AT-E4448A-110 RF/uW internal preamplifier AT-E4448A-111 USB device side I/O interface AT-E4448A-115 512 MB user memory AT-E4448A-123 Switchable MW Preselector Bypass AT-E4448A-233 Built-in measuring receiver personality AT-N1912A Power meters -P-series, dual channel with options: AT-N1912A-101 Front panel sensor and power ref connectors AT-N1912A-903 Power cord, United States and Canada 120v, NEMA 5-15P male plug		Agilent N5531S	P	N
AT-N5532B Sensor Module with option: AT-N5532B-550 30 MHz to 50 GHz, APC 2.4(M) input connector		Agilent N5532B option 550	P	N
AT-N5532B Sensor Module with option: AT-N5532B-504 100 kHz to 4.2 GHz, type N(m) input connector		Agilent N5532B option 504	P	N
AT-N5532B-019 Output adapter for N191xA P-series power meter (Qty 2, one per power sensor)		Agilent N5532B-019	p	N
LAN cross over cable to Connect Power Meter (N1912A) to PSA (E4448A)	Cross over cable	Common Source or Anritsu part number 3-806-152	P	N
Adapter V male to K female	Adapter V(m) to K(f)	Anritsu 34VKF50 (Must be calibrated - See footnote [d])	P, C	S, N
Adapter 2.4 mm(f) to 2.92 mm K(f)	Adapter 2.4 mm (f) to 2.92 mm (K)(f)	Agilent 1250-3782 (Must be calibrated - See footnote [d]) Used with power sensor N5532B option 504	P	N

Table 1-1. Test Equipment List (6 of 6)

Instrument	Critical Specification	Manufacturer/Model	Test Application[a]	Test Equipment Usage[b]
Adapter 2.4 mm female to 2.92 mm (K) male	Adapter 2.4 mm(f) to 2.92 mm (K)(m)	Agilent 11904D (Must be calibrated - See footnote [d])	P	N
Adapter 2.4 mm female to N male	Adapter 2.4 mm (f) to N (m)	Agilent 11903-60002 (Must be calibrated - See footnote [g]	P	N
Adapter K male to N female (For power sensor SC7400 and N5532B opt 504)	Adapter K (m) to N (f)	Anritsu 34NFK50 (Must be calibrated - See footnote [g])	P, C	S, N
Adapter N male to K female	Adapter N male to K female	Anritsu 34NKF50 (Must be calibrated - See footnote [g])	P, C	S, N
Adapter 2.4 mm female to 2.4 mm female	Adapter 2.4 mm (f) to 2.4 mm (f)	Aglient 11900B (Must be calibrated - See footnote [h]) Used with power sensor N5532B option 550	P	N
Adapter 1.85 mm (V) male to 2.4 mm female	Adapter 1.85 mm (V) m to 2.4 mm (f)	Pasternack PE9673 (Must be calibrated - See footnote [h])	P	N
Armored Semi Rigid Test Port Cable (K Connector Female to K Connector Male)	Armored Semi Rigid Test Port Cable (K Connector Female to K Connector Male)	Anritsu 3670K50-2 (Must be calibrated - See footnote [d] [f])	P, C	S, N
Armored Semi Rigid Test Port Cable (V Connector Female to V Connector Male)	Armored Semi Rigid Test Port Cable (V Connector Female to V Connector Male)	Anritsu 3670V50A-2 (Must be calibrated - See footnote [e] [f])	P, C	S, N

a. P = Performance Verification Tests, C = Calibration, T = Troubleshooting
b. S = Standard Test Equipment, N = N5531S Measurement Receiver equipment
c. Only needed if option 2X is installed.
d. Calibrated at the following data points: 100 kHz, 1 MHz, 10 MHz, 100 MHz, 500 MHz to 40 GHz in 500 MHz steps
e. Calibrated at the following data points: 100 kHz, 1 MHz, 10 MHz, 100 MHz, 500 MHz to 67 GHz in 500 MHz steps
f. These cables are not designed for repeated bending. Bend them into the desired shape, then avoid further bending.
g. Calibrated at the following data points: 100 kHz, 1 MHz, 10 MHz, 100 MHz, 500 MHz to 4 GHz in 500 MHz steps.
h. Calibrated at the following data points: 100 kHz, 1 MHz, 10 MHz, 100 MHz, 500 MHz to 50 GHz in 500 MHz steps.

Chapter 2 — Functional Description

2-1 Introduction

This chapter provides brief functional descriptions of the major subsystems that are contained in each model of the MG369xC. In addition, the operation of the frequency synthesis, automatic level control (ALC), and RF deck subsystems is described so that the instrument operator may better understand the overall operation of the MG369xC. Block diagrams are included to supplement the written descriptions.

2-2 Major Subsystems

The MG369xC circuitry consists of various distinct subsystems that are contained on one or more printed circuit board (PCB) assemblies or in microwave components located on the RF deck. The following paragraphs identify the subsystems that make up the instrument and provide a brief description of each.
Figure 2-1 on page 2-4 is an overall block diagram of a typical MG369xC synthesizer.

Digital Control

This circuit subsystem consists of the A2 Microprocessor PCB. The central processor unit (CPU) located on this PCB is the main controller for the MG369xC. This controller directly or indirectly controls all functions of the instrument. The CPU contains memory that stores the main operating system components and instrument firmware, instrument calibration data, and front panel setup data during the power-off condition. It has a GPIB interface that allows it to communicate with external devices over the GPIB and a serial interface to a serial terminal port on the rear panel. The CPU is directly linked via a dedicated data and address bus to the front panel assembly, the A5 Auxiliary/Analog Instruction PCB, the A6 ALC PCB, the A7 YIG-lock PCB, and the A9 YIG assembly.

Interface circuits on the A2 PCB indirectly link the CPU to the A3 reference/fine loop PCB, and the A4 coarse loop PCB. The A2 PCB contains circuits that perform parallel-to-serial and serial-to-parallel data conversion. The A2 also contains circuitry for many of the rear panel signals and a 14-bit resolution digital volt meter (DVM).

Front Panel Assembly

This circuit subsystem consists of the front panel, the front panel rotary data knob, the front panel control PCB, and the liquid crystal display (LCD). The subsystem interfaces the front panel LCD, light emitting diodes (LEDs), and keys to the CPU via the dedicated data and address bus. The front panel rotary data knob is also linked to the CPU via the data and address bus.

The front panel PCB contains the keyboard matrix conductive rubber switches. It has circuits to control the LCD, turn the front panel LEDs on and off, and convert keyboard switch matrix signals to parallel key code. It also contains the standby/operate line switch and the optical encoder for the rotary data knob.

Frequency Synthesis

The frequency synthesis subsystem consists of the A3 reference/fine loop PCB, the A4 coarse loop PCB, the A7 YIG lock PCB, and the A9 YIG assembly. It provides the reference frequencies and phase lock circuits for precise control of the YIG-tuned oscillator frequencies, as follows:

- The reference loop circuitry located on the A3 PCB supplies the stable 10 MHz and 500 MHz reference frequency signals for the rest of the frequency synthesis system.
- The A4 coarse loop PCB generates coarse tuning frequencies of 219.5 to 245 MHz for use by the YIG lock PCB.
- The fine loop circuitry located on the A3 PCB provides fine tuning frequencies of 21.5 to 40 MHz for use by the YIG lock PCB.
- The A7 YIG lock PCB performs phase detection of the YIG-tuned oscillator's output frequency and provides a YIG loop error voltage signal. This error signal is further conditioned, producing a correction signal that is used to fine tune and phase lock the YIG-tuned oscillator.

The CPU sends control data to the A3 reference/fine loop PCB and the A4 coarse loop PCB as serial data words. Refer to Section 2-3 for a functional overview of the frequency synthesis subsystem.

A9 YIG Assembly

The A9 YIG assembly contains the YIG-tuned oscillator and associated PCB assembly. The PCB assembly contains the driver circuitry that provides the tuning current and bias voltages for the YIG-tuned oscillator. The CPU controls the A9 YIG assembly via the serial bus.

ALC/AM/Pulse Modulator

This ALC circuit subsystem consists of the A6 ALC PCB, the A6A1 AM module, output coupler, and switched filter. It provides the following:

- Level control of the RF output power
- Current drive signals to the PIN switches located in the A10 switched filter assembly (SWF), the A12 switched doubler module (SDM), and the source quadrupler module (SQM)
- Drive signals for the step attenuator (Option 2) and the diplexers (used with Option 22)

The CPU controls the A6 ALC PCB (and the A6A1 AM module via the A6 PCB) via the dedicated data and address bus. Refer to Section 2-4 for a functional overview of the ALC subsystem.

RF Deck

This subsystem contains those elements related to the generation, modulation, and control of the sweep- and CW-frequency RF signals. These elements include the A9 YIG-tuned oscillator/PCB assembly, the 0.008 to 2 GHz down converter assembly (A11), the A10 switched filter assembly, the A12 switched doubler module, the source quadrupler module, the directional coupler/level detector, and the optional step attenuator. Refer to Section 2-5 for a functional overview of the RF deck subsystem.

Power Supply

The power supply subsystem consists of the power input connector/filter module, the regulator PCB, the power supply PCB, the standby power supply PCB, and the power module fan unit. It supplies all the regulated DC voltages used by the MG369xC circuits. The voltages are routed throughout the instrument via the motherboard PCB.

Inputs/Outputs

The A21 rear panel PCB and the A2 microprocessor PCB contain the interface circuits for the majority of the rear panel input and output connectors, including the AUX I/O connector.

The A5 Auxiliary PCB (or the optional A5 Analog Instruction PCB) provides a 0V to +10V ramp signal to the rear panel HORIZ OUT connector, a V/GHz signal to the rear panel AUX I/O connector, and a SLOPE signal to the A6 ALC PCB for slope-vs-frequency correction of the RF output power.

The rear panel EXT ALC IN, AM IN, and AM OUT are routed through the A21 rear panel PCB and then through the motherboard PCB to the A6 ALC PCB. The rear panel connectors, 10 MHz REF OUT and 10 MHz REF IN, are routed through the A21 PCB and coupled to the A3 Reference/Fine Loop PCB via coaxial cables.

The rear panel FM/ΦM IN and FM/ΦM OUT connectors are routed through the A21 rear panel PCB, and then through the Motherboard PCB to the A7 YIG-lock PCB. The rear panel PULSE TRIG IN connector is routed through the A21 rear panel PCB, and then to the A6 ALC PCB (or optional Pulse Generator, if installed). The rear panel PULSE SYNC OUT and PULSE VIDEO OUT connectors are routed through the A21 rear panel PCB and then to the optional Pulse Generator via coaxial cables. The rear panel EFC IN connector is routed to the A3 Reference/Fine Loop PCB via coaxial cables.

The rear panel IEEE-488 GPIB and SERIAL I/O connectors are routed through the A21 rear panel PCB and then through the motherboard to the A2 microprocessor PCB.

Motherboard/Interconnections

The motherboard PCB and associated cables provide the interconnections for the flow of data, signals, and DC voltages between all internal components and assemblies throughout the MG369xC.

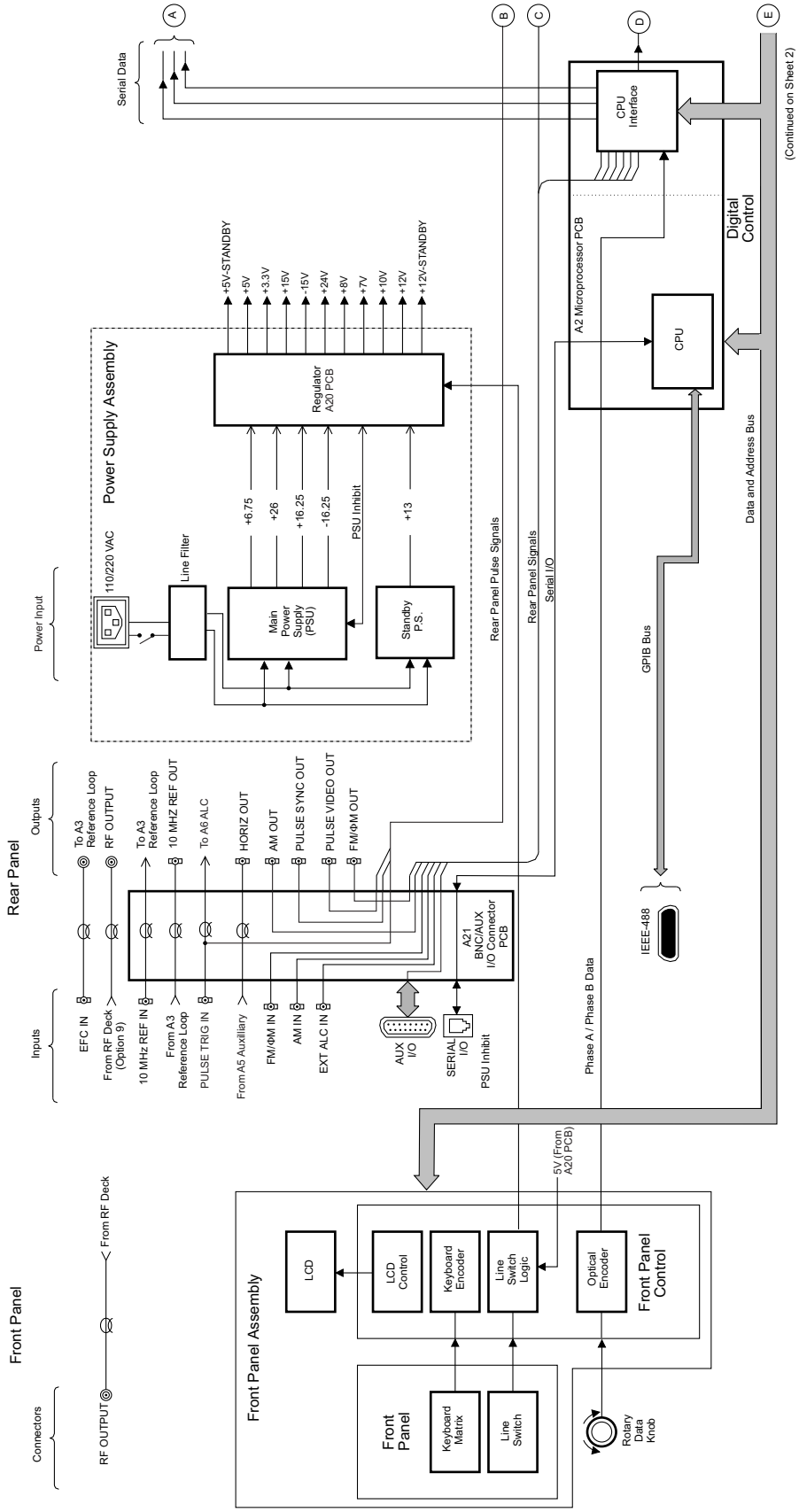

Figure 2-1. Block Diagram of a Typical MG369xC Synthesized Signal Generator (1 of 2)

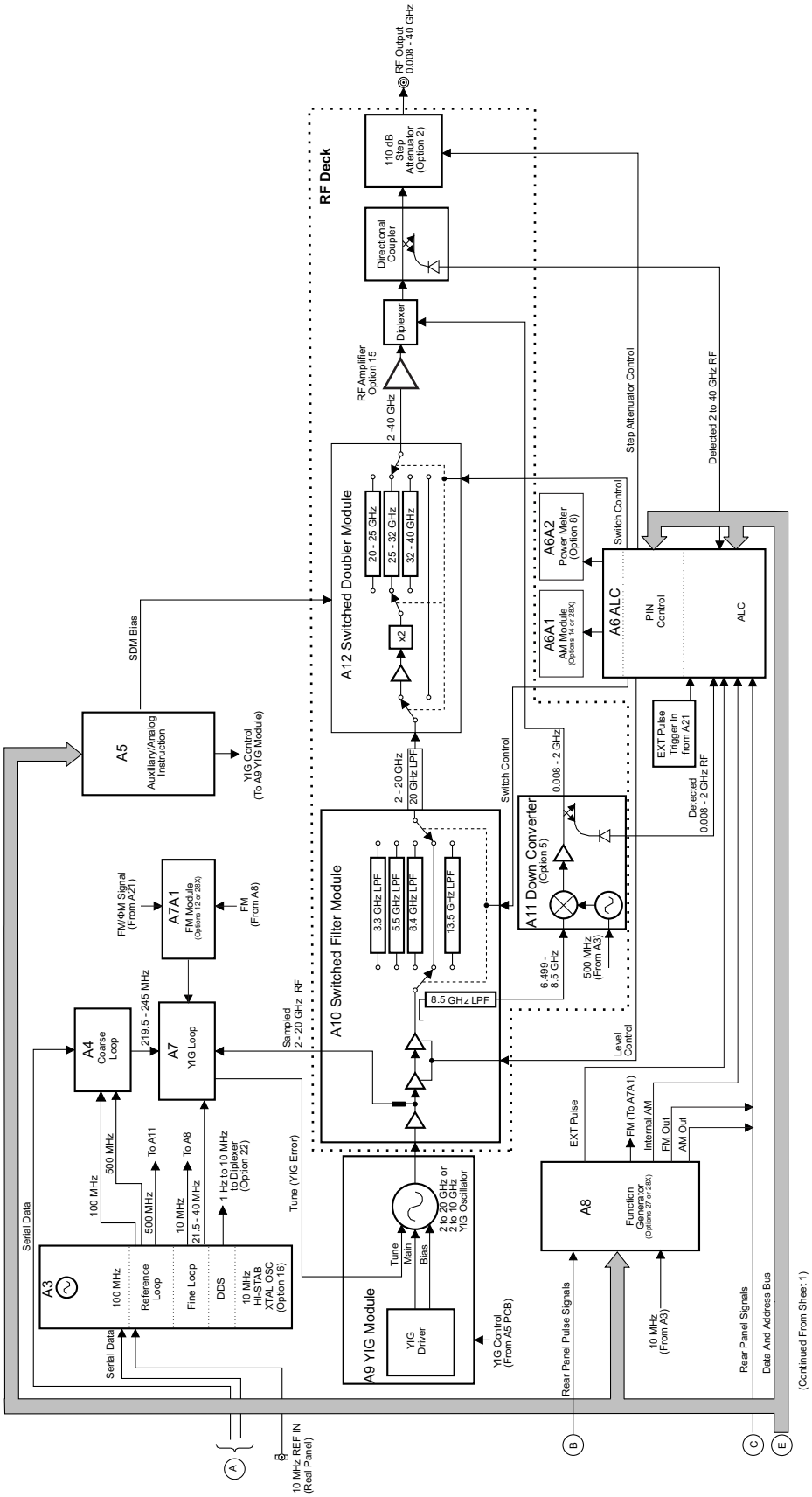

Figure 2-1. Block Diagram of a Typical MG369xC Synthesized Signal Generator (2 of 2)

2-3 Frequency Synthesis

The frequency synthesis subsystem provides phase-lock control of the MG369xC output frequency. It consists of four phase-lock loops, the reference loop, the coarse loop, the fine loop, and the YIG loop. The four phase-lock loops, operating together, produce an accurately synthesized, low-noise RF output signal.
Figure 2-2 on page 2-7 is an overall block diagram of the frequency synthesis subsystem. The following paragraphs describe phase-lock loops and the overall operation of the frequency synthesis subsystem.

Phase Lock Loops

The purpose of a phase-lock loop is to control the frequency of a variable oscillator in order to give it the same accuracy and stability as a fixed reference oscillator. It works by comparing two frequency inputs, one fixed and one variable, and supplying a correction signal to the variable oscillator to reduce the difference between the two inputs. For example, suppose we have a 10 MHz reference oscillator with a stability of 1×10^{-7}/day, and we wish to transfer that stability to a voltage controlled oscillator (VCO). The 10 MHz reference signal is applied to the reference input of a phase-lock loop circuit. The signal from the VCO is applied to the variable input. A phase detector in the phase-lock loop circuit compares the two inputs and determines whether the variable input waveform is leading or lagging the reference. The phase detector generates a correction signal that (depending on polarity) causes the VCO frequency to increase or decrease to reduce any phase difference. When the two inputs match, the loop is said to be *locked*. The variable input from the VCO then equals the reference input in phase, frequency, accuracy, and stability.

In practical applications a frequency divider is placed between the output of the variable oscillator and the variable input to the phase-lock loop. The circuit can then be used to control a frequency that is an exact multiple of the reference frequency. In this way, the variable oscillator acquires the stability of the reference without equaling its frequency. In the A3 reference loop, the 100 MHz VCXO can be controlled by the phase-lock loop using a 10 MHz reference. This is because a divide-by-ten circuit is between the VCXO's output and the variable input to the phase-lock loop. Both inputs to the phase detector will be 10 MHz when the loop is locked.

If a programmable frequency divider is used, a number of frequencies can be phase-locked to the same reference. The limitation is that all must be exact multiples of the reference. The A4 coarse loop and A3 fine loop section both use programmable frequency dividers.

Overall Operation

The YIG-tuned oscillator generates a high-power RF output signal that has low broadband noise and low spurious content. The frequency of the YIG-tuned oscillator is controlled by means of (1) its main tuning coil and (2) its FM (fine tuning) coil. The main tuning coil current from the YIG-driver PCB coarsely tunes the YIG-tuned oscillator to within a few megahertz of the final output frequency. The YIG phase-lock loop is then used to fine tune the YIG-tuned oscillator to the exact output frequency and to reduce FM noise close to the carrier.

One input to the YIG loop is the 219.5 to 245 MHz signal from the coarse loop. This signal is amplified to drive the step-recovery diode (located on the A7 PCB). The step-recovery diode produces harmonics of the coarse loop signal (≥ 1.9755 to > 20 GHz). These harmonics are used by the sampler.

The other input to the sampler is a sampled RF output signal from the YIG-tuned oscillator. Mixing this RF output signal sample with the adjacent coarse-loop harmonic produces a low frequency difference signal that is the 21.5 to 40 MHz YIG IF signal.

The MG369xC CPU programs the coarse-loop oscillator's output frequency so that one of its harmonics will be within 21.5 to 40 MHz of the desired YIG-tuned oscillator's output frequency. The YIG loop phase detector compares the YIG IF signal to the 21.5 to 40 MHz reference signal from the fine loop. If there is a difference, the YIG phase detector fine tunes the YIG-tuned oscillator (via the FM circuitry and the FM coil drivers) to eliminate any frequency difference between the two signals.

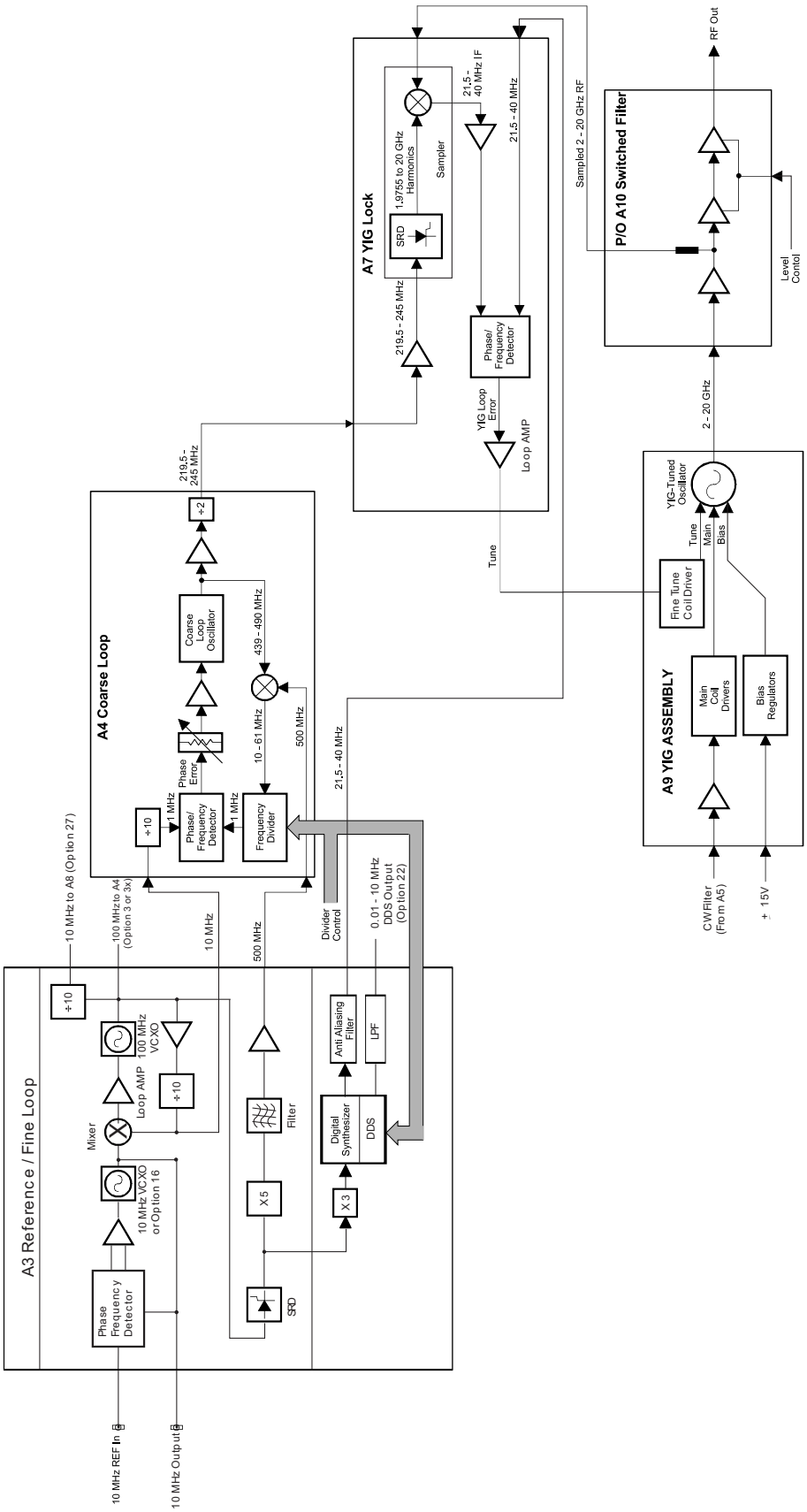

Figure 2-2. Block Diagram of the Frequency Synthesis Subsystem

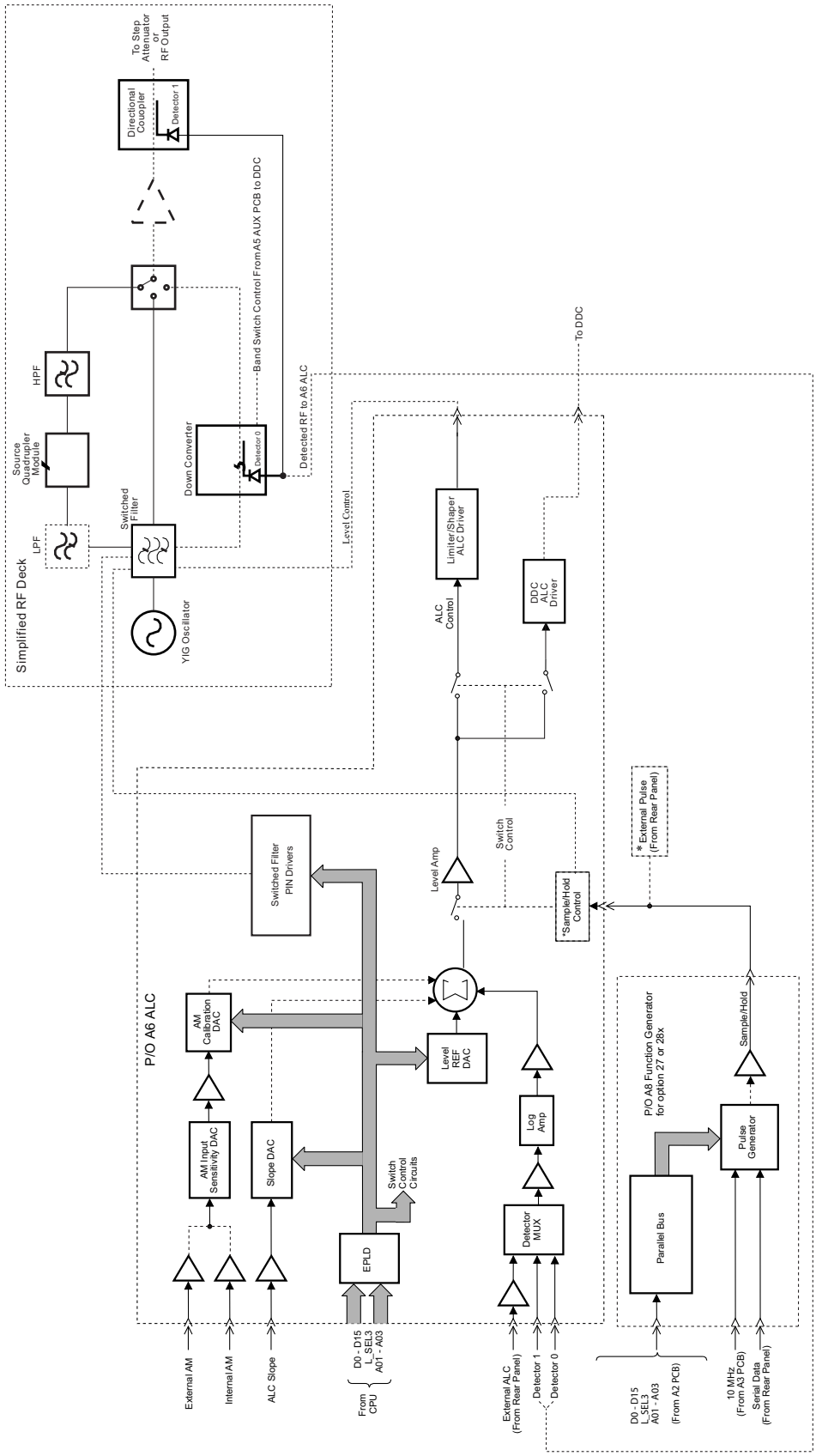

Figure 2-3. Block Diagram of the ALC Subsystem

Phase locking the instrument's output frequency over a broad frequency range is accomplished by programming the coarse-loop oscillator's output to various frequencies that have harmonics close to the desired operating frequencies. Exact frequency tuning for each desired operating frequency is accomplished by programming the fine-loop oscillator. In each case, the YIG-tuned oscillator is first tuned via the main tuning coil to the approximate desired operating frequency. Table 2-1 shows the coarse-loop and fine-loop frequencies for specific RF output frequencies.

The coarse-loop oscillator has a programming (tuning) range of 219.5 to 245 MHz and a resolution of 1 MHz. This provides harmonics from ≥ 1.9755 GHz to > 20 GHz. This allows any YIG-tuned oscillator output frequency to be down converted to a YIG IF signal of 21.5 to 40 MHz.

The YIG loop is fine tuned by varying the 21.5 to 40 MHz reference signal applied to the YIG loop phase detector. By programming the fine-loop oscillator, this signal can be adjusted in 0.01 Hz increments over the 21.5 to 40 GHz range. The resolution of the fine-loop oscillator (hence the resolution of the RF output signal) is 0.01 Hz, which is much finer than is available from the coarse loop alone.

The coarse loop and fine loop outputs are derived from high-stability 10 MHz and 500 MHz signals generated by the A3 reference loop. For applications requiring even greater stability, the 100 MHz oscillator can be phase locked to an optional 10 MHz high stability reference (internal or external).

Table 2-1. RF Output and Loop Frequencies

	Coarse Loop in MHz		Fine Loop in MHz	
RF Out in MHz	**Standard**	**Opt. 3 & 3x**	**Standard**	**Opt. 3 & 3x**
2000	245.61	245.31	35.11	37.50
3000	216.78	211.61	34.93	37.50
4000	212.35	212.63	34.72	40
5000	419.58	420	34.93	40
6000	431.09	402.66	35.20	40
7000	469.01	414.12	35.21	40
8000	472.64	472.9	34.91	40
9000	821.45	821.8	36.00	40
10000	836.28	836.7	35.40	40
11000	848.82	849.2	34.60	40
12000	859.63	802.67	34.77	40
13000	869.01	815.00	35.15	40
14000	935.64	825.88	34.65	40
15000	939.71	835.56	35.29	40
16000	943.20	943.5	34.40	40
17000	946.35	946.7	34.33	40
18000	858.78	949.47	34.35	40
19000	865.22	952.00	34.78	40
20000	954.00	954.29	34.00	40

RF Outputs 0.008 MHz to 70 GHz

Refer to the block diagrams of the RF Deck shown in Figure 2-4 on page 2-18 through Figure 2-15 on page 2-29 for the following descriptions. The MG369xC uses one YIG-tuned oscillator capable of generating RF signals in the frequency range of 2.0 to 20 GHz (the MG3691C YIG-tuned oscillator generates RF signals in the frequency range of 2.0 to 10.0 GHz). All other frequencies output by the instrument, except for 0.1 Hz to 10 MHz (Option 22) are derived from the fundamental frequencies generated by the YIG-tuned oscillator.

0.1 Hz to 10 MHz (Option 22)

Output frequencies of 0.1 Hz to 10 MHz are produced by models with Option 22. The 0.1 Hz to 10 MHz signal is generated by a direct digital synthesizer (DDS) located on the A3 PCB. Precise control of the output frequencies to a 0.1 Hz resolution is achieved by phase-lock control of the 300 MHz signal generated by the fine loop circuitry on the A3 PCB.

0.008 to 2.2 GHz (Option 4)

RF output frequencies of 0.008 to 2.2 GHz are developed by down converting the fundamental frequencies of 2 to 4.4 GHz. This is achieved by using a series of dividers and 16 bandpass filters. Precise control of the 0.008 to 2.2 GHz frequencies to 0.01 Hz resolution is achieved through phase-lock control of the fundamental frequencies prior to division.

0.008 to 2 GHz (Option 5)

RF output frequencies of 0.008 to 2 GHz are developed by down converting the fundamental frequencies of 6.508 to 8.5 GHz. This is achieved by mixing the fundamental RF output with a 6.5 GHz local oscillator signal that is phase locked to the 500 MHz output of the reference loop. Precise control of the 0.008 to 2 GHz frequencies to 0.01 Hz resolution is accomplished by phase-lock control of the 6.508 to 8.5 GHz fundamental frequencies prior to down conversion.

20 to 31.8 GHz (Model MG3693C)

RF output frequencies of 20 to 31.8 GHz are produced by doubling the 10 to 15.9 GHz fundamental frequencies. Phase-lock control of the 10 to 15.9 GHz fundamental frequencies, accomplished prior to doubling, ensures precise control of the 20 to 31.8 GHz frequencies to 0.01 Hz resolution.

20 to 40 GHz (Model MG3694C)

RF output frequencies of 20 to 40 GHz are produced by doubling the 10 to 20 GHz fundamental frequencies. Phase-lock control of the 10 to 20 GHz fundamental frequencies, accomplished prior to doubling, ensures precise control of the 20 to 40 GHz frequencies to 0.01 Hz resolution.

40 to 50 GHz (Model MG3695C)

RF output frequencies of 40 to 50 GHz are produced by quadrupling the 10 to 12.5 GHz fundamental frequencies. Phase-lock control of the 10 to 12.5 GHz fundamental frequencies is accomplished prior to doubling. This ensures precise control of the 40 to 50 GHz frequencies to a 0.01 Hz resolution.

40 to 70 GHz (Model MG3697C)

RF output frequencies of 40 to 70 GHz are produced by quadrupling the 10 to 17.5 GHz fundamental frequencies. Phase-lock control of the 10 to 17.5 GHz fundamental frequencies is accomplished prior to doubling. This ensures precise control of the 40 to 70 GHz frequencies to a 0.01 Hz resolution.

Table 2-2. Digital Down Converter Frequency Bands

Band	Frequency Range (in MHz)
0	8 to 12.5
1	12.5 to 17.5
2	17.5 to 22.5
3	22.5 to 31.25
4	31.25 to 43.75
5	43.75 to 62.5
6	62.5 to 87.5
7	87.5 to 125
8	125 to 175
9	175 to 250
10	250 to 350
11	350 to 500
12	500 to 700
13	700 to 1050
14	1050 to 1500
15	1500 to 2200

Frequency Modulation

Frequency modulation (FM) of the YIG-tuned oscillator RF output is achieved by summing an external or internal modulating signal into the FM control path of the YIG loop (refer to Figure 2-1 and Figure 2-2).

The external modulating signal comes from the rear panel FM/ΦM IN input connector; the internal modulating signal comes from the A8 Function Generator PCB. Circuits on the A7A1 FM Module adjust the modulating signal for the FM sensitivity selected, then sum it into the YIG loop FM control path. There, it frequency modulates the RF output signal by controlling the YIG-tuned oscillator's FM (fine tuning) coil current.

Phase Modulation

Phase modulation (ΦM) of the YIG-tuned oscillator RF output is achieved by summing an external or internal modulating signal into the FM control path of the YIG loop. The external modulating signal comes from the rear panel FM IN/ΦM IN input connector; the internal modulating signal comes from the A8 Function Generator PCB.

Circuits on the A7A1 FM Module adjust the modulating signal for the ΦM sensitivity selected, convert the modulating signal to a ΦM signal by differentiation, and then sum it into the YIG loop FM control path. There, it phase modulates the RF output signal by controlling the YIG-tuned oscillator's FM (fine tuning) coil current.

Analog Sweep Mode

Broad-band analog frequency sweeps (> 100 MHz wide) of the YIG-tuned oscillator RF output are accomplished by applying appropriate analog sweep ramp signals, generated by the A5 Analog Instruction PCB, to the YIG-tuned oscillator's main tuning coil. In this mode, the start, stop, and band switching frequencies are phase-lock-corrected during the sweep.

Note	For instruments with Option 4 at frequencies of ≤ 2.2 GHz, broad-band analog frequency sweeps are > 25 MHz wide; narrow-band analog frequency sweeps are ≤ 25 MHz.

Narrow-band analog frequency sweeps (≤ 100 MHz wide) of the YIG-tuned oscillator RF output are accomplished by summing appropriate analog sweep ramp signals, generated by the A5 Analog Instruction PCB, into the YIG-tuned oscillator's FM tuning coil control path. The YIG-tuned oscillator's RF output is then swept about a center frequency. The center frequency is set by applying a tuning signal (also from the A5 PCB) to the YIG-tuned oscillator's main tuning coil. In this mode, YIG loop phase locking is disabled except during center frequency correction, which occurs during sweep retrace.

Step Sweep Mode

Step (digital) frequency sweeps of the YIG-tuned oscillator RF output consist of a series of discrete, synthesized steps between a start and stop frequency. Each frequency step is generated by applying the tuning signal (from the A9 module PCB) to the YIG-tuned oscillator's main tuning coil, then phase-locking the RF output. Every frequency step in the sweep range is phase-locked.

2-4 ALC/AM/Pulse Modulation

The MG369xC ALC, AM, and pulse modulation subsystems provide automatic level control (ALC), amplitude modulation (AM), and pulse modulation of the RF output signal. The ALC loop consists of circuits located on the A6 ALC PCB, and the A9 YIG PCB assembly. These circuits interface with the A10 switched filter assembly, the A11 down converter assembly and the directional coupler/level detector (all located on the RF deck). AM circuits located on the A6 ALC PCB and A6A1 AM Module are also included in this loop. Pulse modulation of the RF output signal is provided by circuits on the A6 ALC PCB. These circuits interface directly with the switched filter assembly located on the RF deck via coaxial cables. (In instruments with Option 4, these circuits interface directly with the digital down converter and are looped through the digital down converter to the switched filter assembly.)

The ALC subsystem is shown in Figure 2-3 on page 2-8. The following paragraphs describe the operation of the subsystem components.

ALC Loop Operation

In the MG369xC, a portion of the RF output is detected and coupled out of the directional coupler/level detector as the feedback input to the ALC loop. The feedback signal from the detector is routed to the A6 ALC PCB where it is compared with a reference voltage that represents the desired RF power output level. If the two voltages do not match, an error correction signal is fed to the modulator shaper amplifier circuits located on the A6 PCB. The resulting ALC control voltage output causes the level control circuits, located on the A10 switched filter assembly, to adjust the RF output level. Thus, the feedback signal voltage from the level detector will be set equal to the reference voltage.

Note	The instrument uses two internal level detection circuits. For frequencies < 2 GHz, the level detector is part of the down converter. The signal from this detector is routed to the A6 ALC PCB as the Detector 0 input. For frequencies ≥ 2 GHz, the level detector is part of the main directional coupler. The signal from this detector is routed to the A6 ALC PCB as the Detector 1 input.

The level reference DAC, under the control of the CPU, provides the RF level reference voltage. By setting the output of this DAC to the appropriate voltage, the CPU adjusts the RF output power to the level selected by the user.

External Leveling

In the external leveling mode, an external detector or power meter monitors the RF output level of the MG369xC instead of the internal level detector. The signal from the external detector or power meter goes to the A6 ALC PCB assembly from the rear panel input. The ALC controls the RF power output level as previously described.

ALC Slope

During analog sweeps, a slope-vs-frequency signal, from the A5 Analog Instruction PCB, is summed with the level reference and detector inputs into the ALC loop. The Slope DAC, under the control of the CPU, adjusts this ALC slope signal to compensate for an increasing or decreasing output power-vs-frequency characteristic caused by the level detectors and (optional) step attenuator. In addition, the Slope DAC lets the user adjust for the slope-vs-frequency characteristics of external components.

Power Sweep

In this mode, the CPU has the ALC step the RF output through a range of levels specified by the user. This feature can be used in conjunction with the sweep mode to produce a set of identical frequency sweeps, each with a different RF power output level.

Amplitude Modulation

Amplitude modulation (AM) of the RF output signal is accomplished by summing an external or internal modulating signal into the ALC loop. External modulating signals come from the rear panel AM IN inputs, the internal modulating signal comes from the A8 Function Generator PCB.

The AM Input Sensitivity DAC and the AM Calibration DAC, under the control of the CPU, adjust the modulating signal for the proper amount of AM in both the linear and the log modes of operation. The adjusted modulating signal is summed with the level reference, slope, and detector inputs into the ALC loop. This produces an ALC control signal that varies with the modulating signal. The action of the ALC loop then causes the envelope of the RF output signal to track the modulation signal.

Pulse Modulation Operation

During pulse modulation, the ALC level amplifier (A6 ALC PCB) is operated as a sample/hold amplifier. The level amplifier is synchronized with the modulating pulses from the A8 Function Generator PCB so that the ALC loop effectively operates only during the ON portion of the pulsed modulated RF output.

Pulse Generator Operation

The A8 Function Generator PCB provides the internal pulse generating function for the MG369xC. It also interfaces external pulse inputs from the rear panel connector to the pulse modulator driver in the external mode.

The pulse generator produces a pulse modulation waveform consisting of single, doublet, triplet, or quadruplet pulse trains at variable pulse rates, widths, and delays. It operates at two selectable clock rates — 10 MHz and 100 MHz. In addition, the pulse generator produces a sync pulse and video pulse output that goes to the rear panel and a sample/hold signal that goes to the A6 ALC PCB. The sync pulse output is for synchronizing auxiliary instruments to the internally generated pulse; the video pulse is a TTL level copy of the RF output pulse; and the sample/hold signal synchronizes the ALC loop to the ON portion of the pulse modulating waveform.

The MG369xC has five pulse modulation modes:

- Internal pulse modulation mode—The pulse modulation waveform is generated and timed internally.
- External pulse mode—The external pulse source signal from the rear panel connectors is interfaced by the pulse generator to the pulse modulation driver.
- External triggered mode—The pulse generator is triggered by the external pulse source signal to produce the pulse modulation waveform.
- External gated mode—The external pulse source signal gates the internal pulse generator on and off.
- Composite mode—The external pulse source signal triggers the internal pulse generator and also modulates the RF output signal. The pulse generator produces a delayed, single pulse waveform that also modulates the RF output signal.

2-5 RF Deck Assemblies

The primary purpose of the RF deck assembly is to generate CW RF signals and route these signals to the front panel RF OUTPUT connector. It is capable of generating RF signals in the frequency range of 0.008 to 70 GHz (0.1 Hz to 70 GHz with Option 22).

The series MG369xC use a single YIG-tuned oscillator. All other frequencies (except for 0.1 Hz to 10 MHz), are derived from the fundamental frequencies generated by this oscillator, as follows:

- RF output frequencies of 0.1 Hz to 10 MHz (Option 22) are generated by the A3 Reference Loop PCB.
- RF output frequencies of 0.008 to 2 GHz are developed by down converting the fundamental frequencies of 6.508 to 8.5 GHz (for option 5).
- RF output frequencies of 0.008 to 2.2 GHz are developed by successively dividing the fundamental frequencies of 2 to 4.4 GHz (for option 4).
- RF output frequencies of 2 (2.2 GHz with option 4) to 20 GHz are produced directly from the YIG-tuned Oscillator.
- RF output frequencies of 20 to 31.8 GHz are produced by doubling the fundamental frequencies of 10 to 15.9 GHz.
- RF output frequencies of 20 to 40 GHz are produced by doubling the fundamental frequencies of 10 to 20 GHz.
- RF output frequencies of 40 to 50 GHz are produced by quadrupling the fundamental frequencies of 10 to 12.5 GHz.
- RF output frequencies of 40 to 70 GHz are produced by quadrupling the fundamental frequencies of 10 to 17.5 GHz.

RF Deck Configurations

All MG369xC RF deck assemblies contain a YIG-tuned oscillator, a switched filter assembly, and a directional coupler. Beyond that, the configuration of the RF deck assembly varies according to the particular instrument model and options installed.

Refer to the block diagrams in Figure 2-4 on page 2-18 through Figure 2-15 on page 2-29, which show the various RF deck configurations and include all of the common RF components found in the series MG369xC RF deck assemblies. Refer to these block diagram while reading the following paragraphs.

YIG-tuned Oscillator

There are two YIG-tuned oscillator configurations. The MG3691C uses a single-band, 2 to 10 GHz, YIG-tuned oscillator. All other MG369xC models use a dual-band, 2 to 20 GHz YIG-tuned oscillator. The dual-band YIG-tuned oscillator contains two oscillators-one covering the frequency range of 2.0 to 10.0 GHz and one covering the frequency range of 10.0 to 20.0 GHz. Both of these oscillators use a common internal amplifier.

The YIG-tuned oscillator generates RF output signals that have low broadband noise and low spurious content. It is driven by the main tuning coil current and bias voltages from the A9 YIG PCB assembly and the fine tuning coil current from the A7 YIG lock PCB. During CW mode, the main tuning coil current tunes the oscillator to within a few megahertz of the final output frequency. The phase-lock circuitry of the YIG loop then fine adjusts the oscillator's fine tuning coil current to make the output frequency exact.

RF Signal Filtering

The RF signal from the YIG-tuned oscillator is routed to the level control circuits located on the A10 switched filter assembly and then, via PIN switches, to switched low-pass filters. The PIN switch drive current signals are generated on the A6 ALC PCB and routed to the switch control input on the A10 assembly.

The switched low-pass filters provide rejection of the harmonics that are generated by the YIG-tuned oscillator. In MG369xC models, the 2 to 20 GHz RF signal from the level control circuits has four filtering paths and a through path. The four filtering paths are 3.3 GHz, 5.5 GHz, 8.4 GHz, and 13.5 GHz. Signals above 13.5 GHz are routed via the through path.

To generate RF signals from 0.008 to 2 GHz, the MG369xC couples the RF signal to the A11 down converter. A coupler in the A10 switched filter path provides this RF signal, which is routed through a 8.5 GHz low-pass filter to connector J3, and then to the down converter. The 0.008 to 2 GHz RF signal output from the down converter is routed back to the A10 assembly (connector J1) and then multiplexed through the same path to the switched filter output.

After routing through the appropriate path, the RF signal is multiplexed by the PIN switches and goes via a 20 GHz low-pass filter to the A10 switched filter assembly output connector J2. From J2, the RF signal goes to the input of the directional coupler (model MG3692C), the input connector J1 of the A11 switched doubler module (models MG3693C/4C), or to an amplifier if the instrument is fitted with Option 15.

Instruments fitted with option 15A, 15B, 15C, or 15D all use a fixed gain amplifier before the directional coupler.

For models with Option 22, the RF signal from J2 goes to either input connector A of the diplexers (≤ 20 GHz models) or the input connector J1 of the switched doubler module (> 20 GHz models).

0.008 to 2 GHz Down Converter (Option 5)

The 0.008 to 2 GHz down converter assembly (shown in Figure 2-4) contains a 6.5 GHz VCO that is phase-locked to the 500 MHz reference signal from the A3 reference loop PCB. The 6.5 GHz VCO's phase-lock condition is monitored by the CPU. The 6.5 GHz VCO is on at all times; however, the down converter amplifier is powered on by the A5 AUX PCB only when the 0.008 to 2 GHz frequency range is selected.

For models with Option 22 and without an optional step attenuator, the 0.008 to 2 GHz (0.008 to 2.2 GHz with Option 4) RF output of the down converter is diplexed with the 0.1 Hz to 10 MHz output of the A3 DDS section. The resulting 0.1 Hz to 2 GHz signal is then diplexed with the RF signal from the switched filter assembly (or switched doubler module for > 20 GHz models) into the RF path to the directional coupler.

During CW or step frequency operations in the 0.008 to 2 GHz frequency range, the 6.508 to 8.5 GHz RF signal output from J3 of the switched filter assembly goes to input connector J1 of the down converter. This signal is then mixed with the 6.5 GHz VCO signal resulting in a 0.008 to 2 GHz RF signal. The resultant RF signal is fed through a 2 GHz low-pass filter, then amplified and routed to the output connector J3. A portion of the down converter's RF output signal is detected, amplified, and coupled out for use in internal leveling. This detected RF sample is routed to the A6 ALC PCB.

The 0.008 to 2 GHz RF output from the down converter goes to input connector J1 of the switched filter assembly. There, the 0.008 to 2 GHz RF signal is multiplexed into the switched filter's output.

0.008 to 2.2 GHz Digital Down Converter (Option 4)

The 0.008 to 2.2 GHz digital down converter assembly maintains the same basic functionality and control as the 0.008 to 2 GHz down converter. During CW or step frequency operations in the 0.008 to 2.2 GHz frequency range, a 2 to 4.4 GHz RF signal output from J3 of the switched filter assembly goes to the input connector J1 of the down converter.

This signal is then down converted through a series of dividers resulting in a 0.008 to 2.2 GHz RF signal output. The resultant RF signal is fed through a series of band-pass filters, then detected, amplified, and coupled out for use in internal leveling before being routed to the output connector J3. The detected RF sample is routed to the A6 ALC PCB. Digital control signals from the A2 CPU PCB are routed through the A5 auxiliary PCB.

Switched Doubler Module

The A11 switched doubler module is used on all MG369xC models with RF output frequencies > 20 GHz. Model MG3693C uses an SDM to double the fundamental frequencies of 10 to 15.9 GHz to produce RF output frequencies of 20 to 31.8 GHz. Similarly, model MG3694C uses a SDM to double the fundamental frequencies of 10 to 20 GHz to produce RF output frequencies of 20 to 40 GHz.

The RF signal from the switched filter assembly is input to the SDM at J1. During CW or step frequency operations in the 20 to 40 GHz frequency range, the 10 to 20 GHz RF signal input is routed by PIN switches to the doubler/amplifiers. PIN switch drive current is provided by the A6 ALC PCB and bias voltage is provided for the doubler/amplifiers by the A5 AUX PCB assembly. The RF signal is amplified, then doubled in frequency. From the doubler, the 20 to 40 GHz RF signal is routed by PIN switches to the bandpass filters. The A11 SDM has three bandpass filter paths that provide good harmonic performance. The filter frequency ranges are 20 to 25 GHz, 25 to 32 GHz, and 32 to 40 GHz.

After routing through the appropriate bandpass filter, the 20 to 40 GHz RF signal is multiplexed by the PIN switches to the SDM output at connector J2. RF signals input to the SDM of ≤ 20 GHz are multiplexed through by the PIN switches of the SDM to the output connector J2. From J2, the RF signal goes to the directional coupler. Option 15 adds an amplifier between the SDM J2 output and the directional coupler.

For models with Option 22, two diplexers are added that switch the 0.1 Hz to 10 MHz DDS signal, 10 MHz to 2 GHz signal, and 2 GHz to 40 GHz signal into the directional coupler when those respective bands are active.

Source Quadrupler Module

The source quadrupler module, found in > 40 GHz models (see Figure 2-8 through Figure 2-15), is used to quadruple the fundamental frequencies of 10 to 17.5 GHz to produce RF output frequencies of 40 to 70 GHz. The RF signal inputs for the SQM come from the switched filter assembly. The modulator control signal for the SQM is received from the A6 ALC PCB where it is developed from the ALC control signal. The A6 PCB also supplies the amplifier bias voltage(s) for the SQM.

Model MG3695C SQM Operation

During CW and swept frequency operations in the 40 to 50 GHz frequency range, the 10 to 12.5 GHz RF signal input is quadrupled and amplified, then goes to the modulator. The modulator provides for power level control. From the modulator, the 40 to 50 GHz RF signals goes via a band-pass filter to output connector J3 of the forward coupler. The 0.008 to 40 GHz RF output signals from the SDM (0.1 Hz to 40 GHz RF output signals from the diplexers for MG3695C with Option 22) are routed to input connector J2 of the SQM forward coupler. The 0.008 to 50 GHz (0.1 Hz to 50 GHz for MG3695C with Option 22) RF output signals go from J3 of the SQM forward coupler to the directional coupler.

Model MG3697C SQM Operation

During CW or swept frequency operations in the 40 to 70 GHz frequency range, the 10 to 17.5 GHz RF signal input is qaudrupled and amplified, then goes to the modulator. The modulator provides for power level control of the RF output signals. From the modulator, the 40 to 70 GHz. RF signals go via a band-pass filter to the output connector of the SQM. From the SQM, the 40 to 70 GHz RF output signals go through a 37 GHz high pass filter, and then to the input connector J1 of the forward coupler. From the SDM, the 0.008 to 40 GHz RF output signals (0.1 Hz to 40 GHz RF output signals from the diplexers for MG3697C with Option 22) are routed to input connector J2 of the forward coupler. The 0.008 to 70 GHz (0.1 Hz to 70 GHz for MG3697C with Option 22) RF output signals go from the output connector J3 of the forward coupler to the directional coupler.

Step Attenuators

The optional step attenuators available for use with the MG369xC models are as follows:

- Mechanical Step Attenuator, 110 dB for MG3691C and MG3692C (Option 2A)
- Mechanical Step Attenuator, 110 dB for MG3693C or MG3694C (Option 2B)
- Mechanical Step Attenuator, 90 dB for MG3695C and MG3697C (Option 2C)
- Electronic Step Attenuator, 120 dB for MG3691C (Option 2E)

Step attenuators provide attenuation of the RF output in 10 dB steps. Maximum rated RF output power is reduced. The step attenuator drive current for Option 2 is supplied by the A6 PCB.

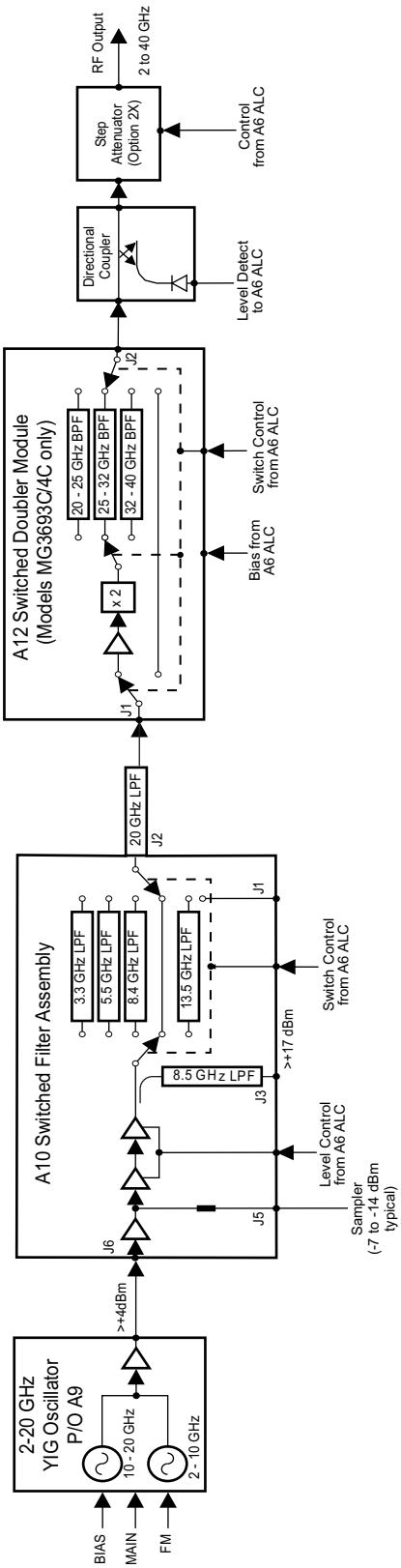

Figure 2-4. Block Diagram of the RF Deck Assembly for Models MG3691C, MG3692C, MG3693C, and MG3694C with No Options

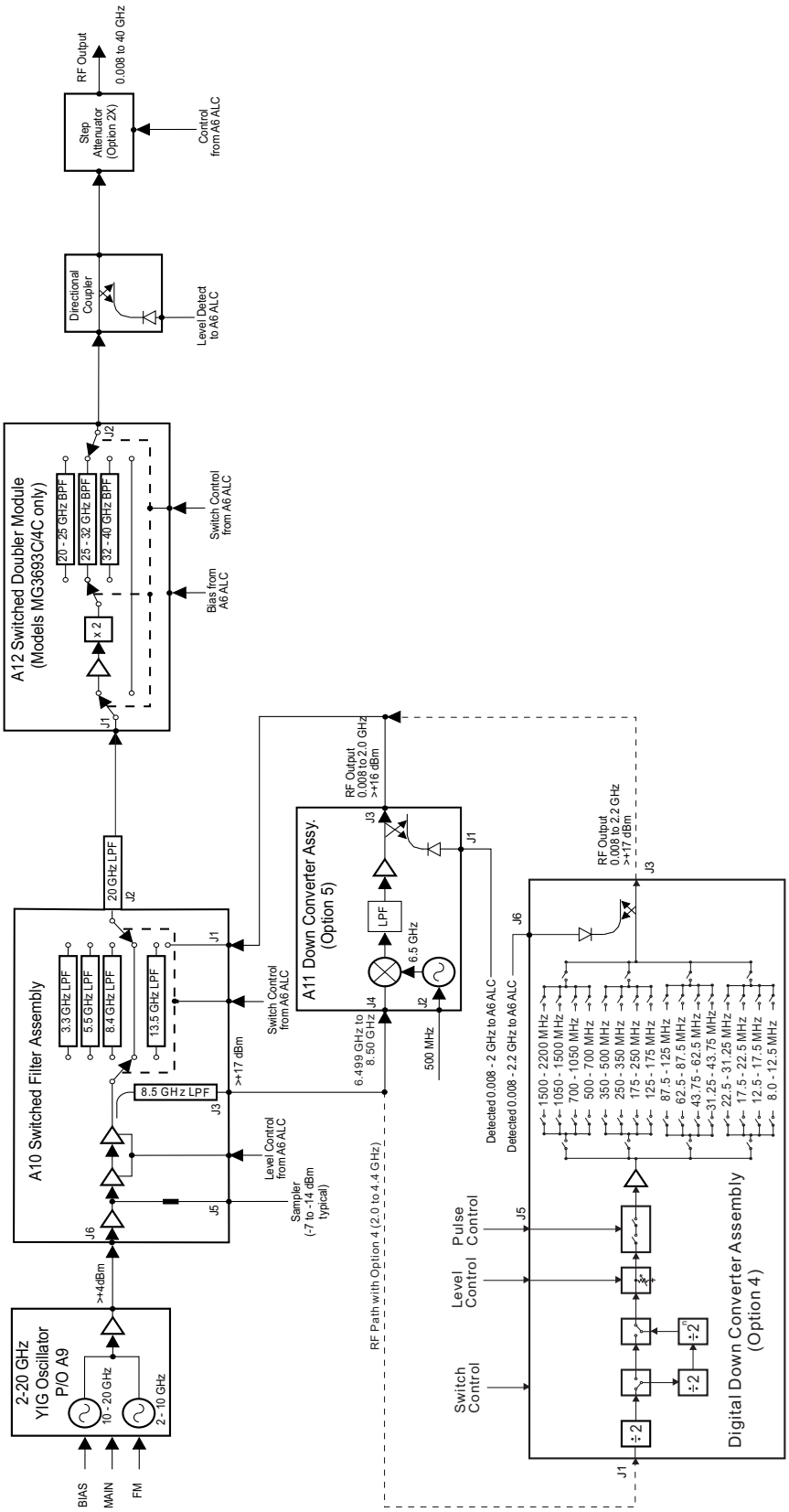

Figure 2-5. Block Diagram of the RF Deck Assembly for Models MG3691C, MG3692C, MG3693C, and MG3694C with Option 4 or 5

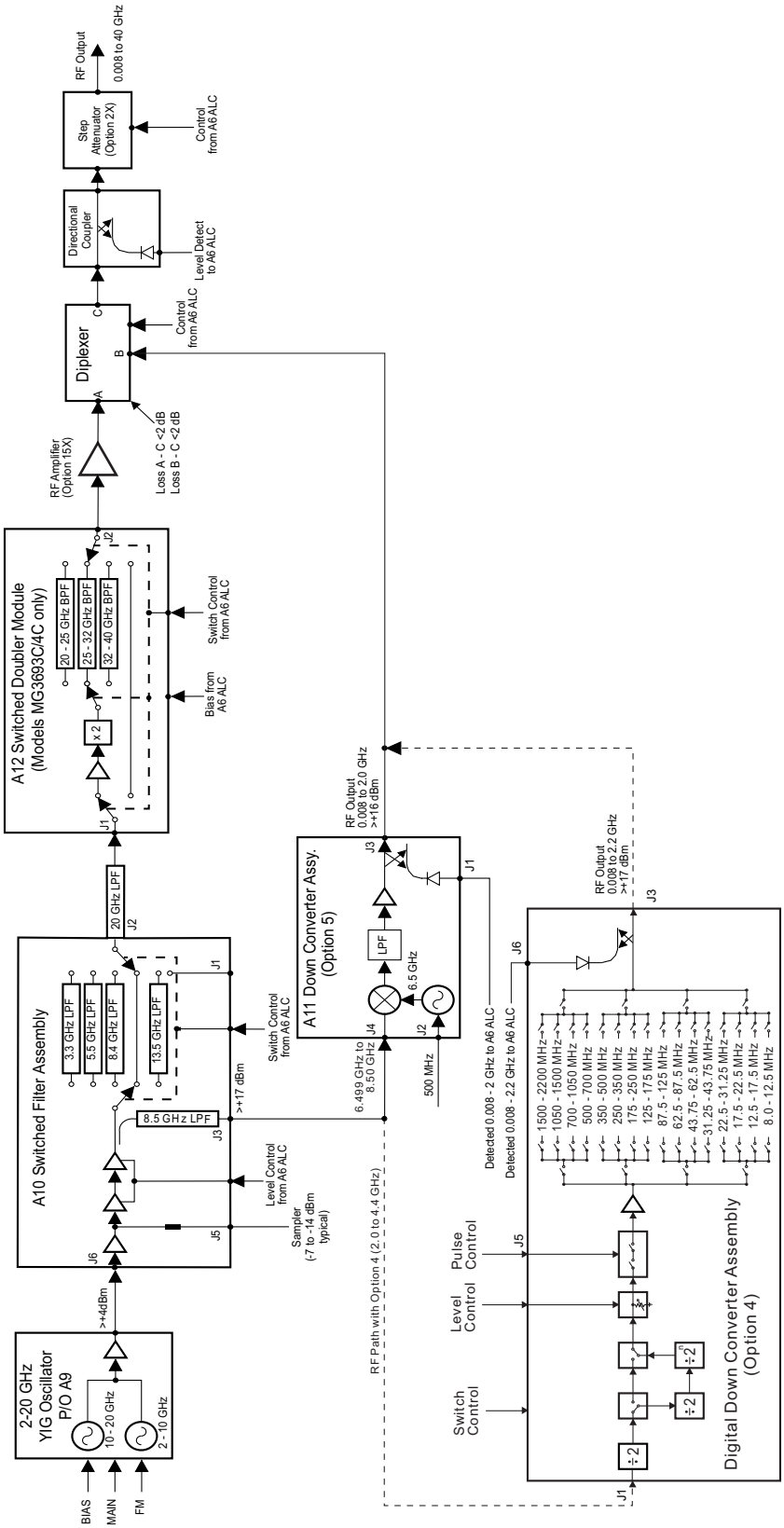

Figure 2-6. Block Diagram of the RF Deck Assembly for Models MG3691C, MG3692C, MG3693C, and MG3694C with Options 4 or 5 and 15

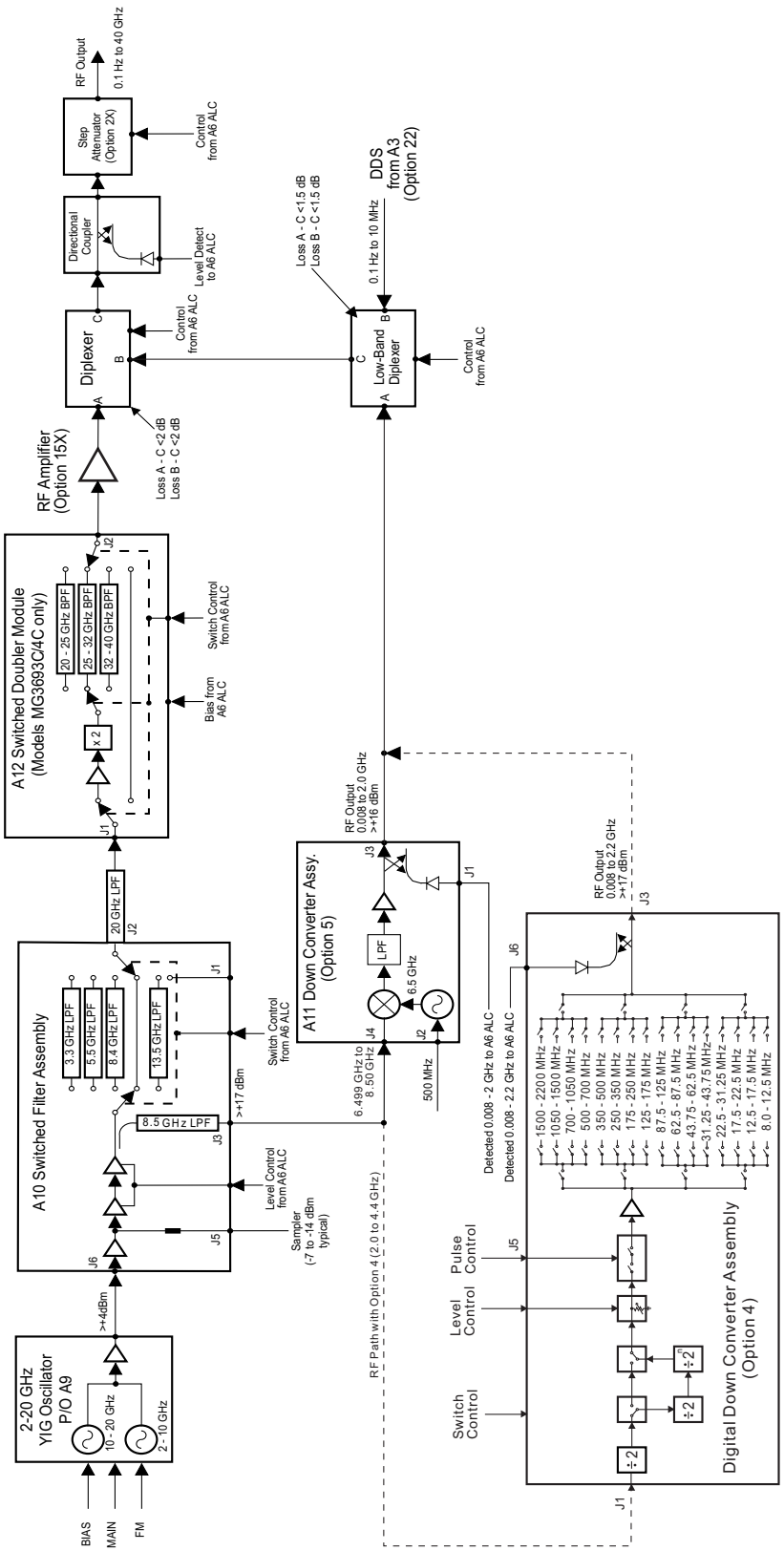

Figure 2-7. Block Diagram of the RF Deck Assembly for Models MG3691C, MG3692C, MG3693C, and MG3694C with Options 4 or 5, 15, and 22

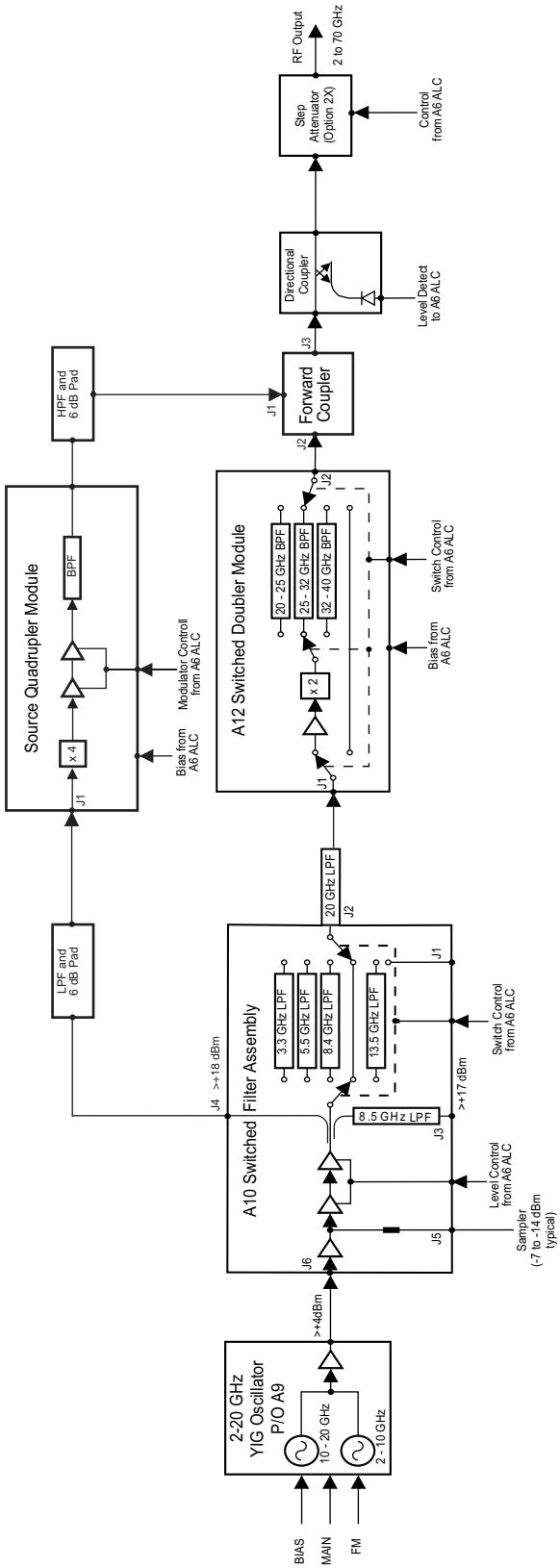

Figure 2-8. Block Diagram of the RF Deck Assembly for Model MG3695C with No Options

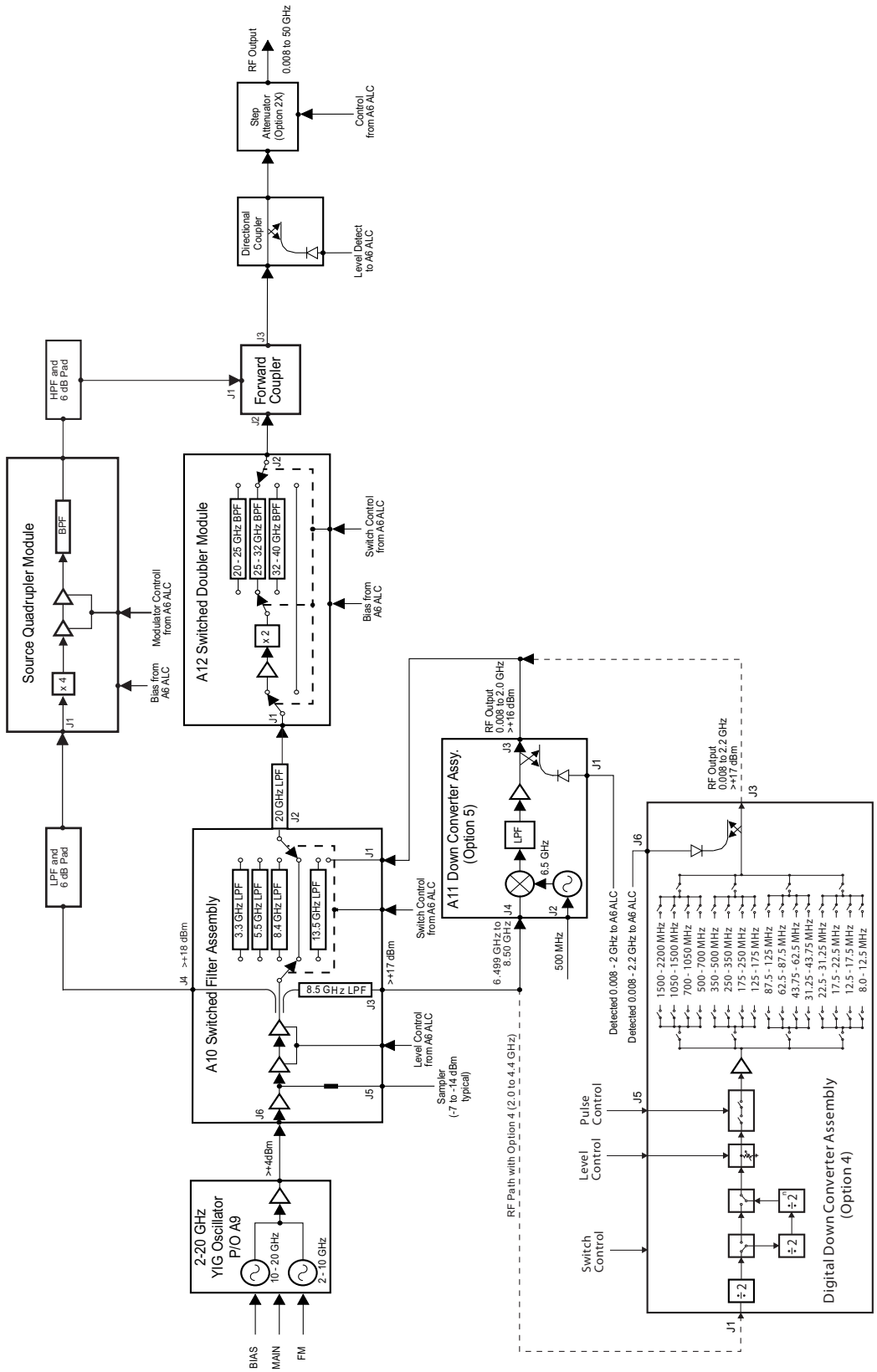

Figure 2-9. Block Diagram of the RF Deck Assembly for Model MG3695C with Option 4 or 5

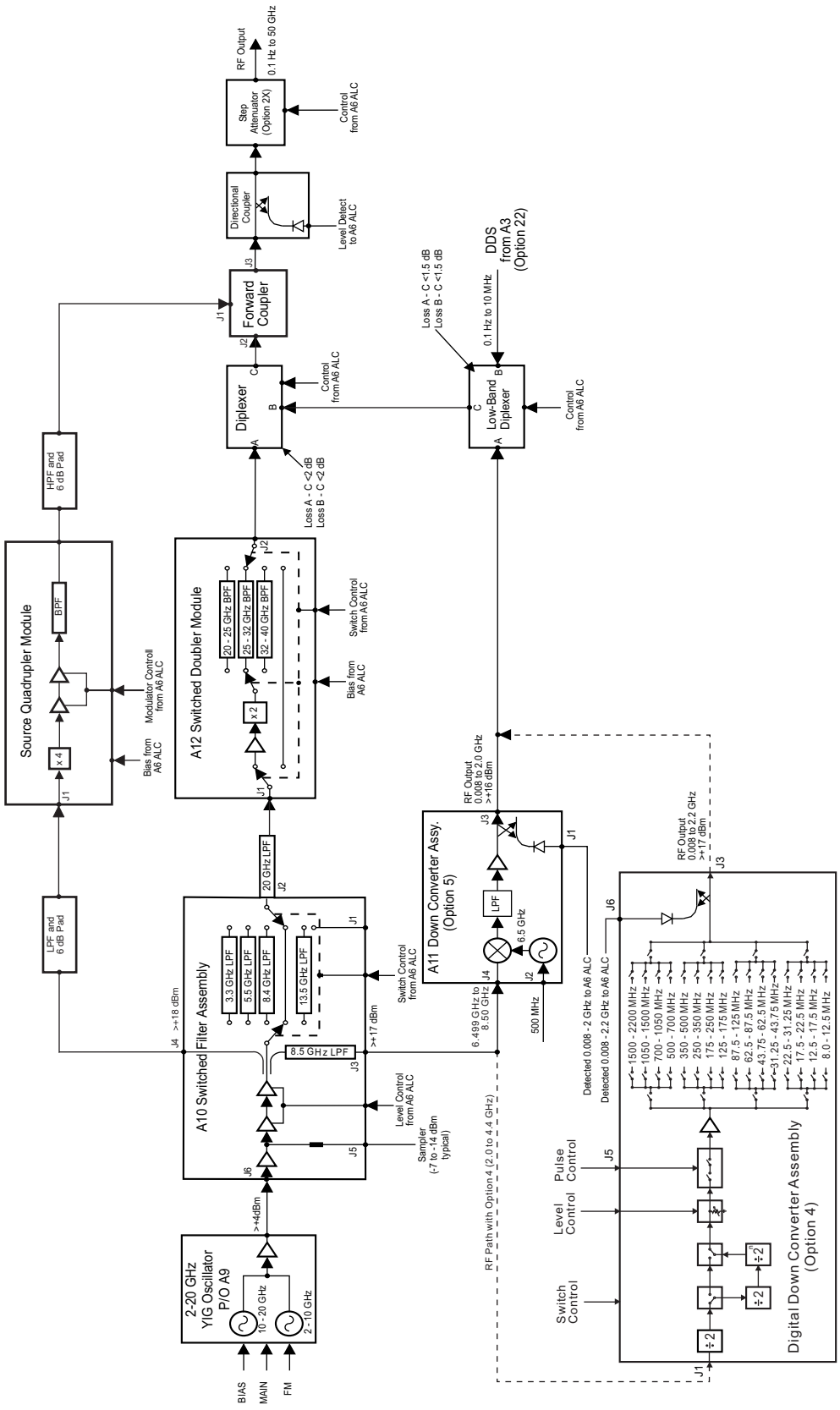

Figure 2-10. Block Diagram of the RF Deck Assembly for Model MG3695C with Options 4 or 5 and 22

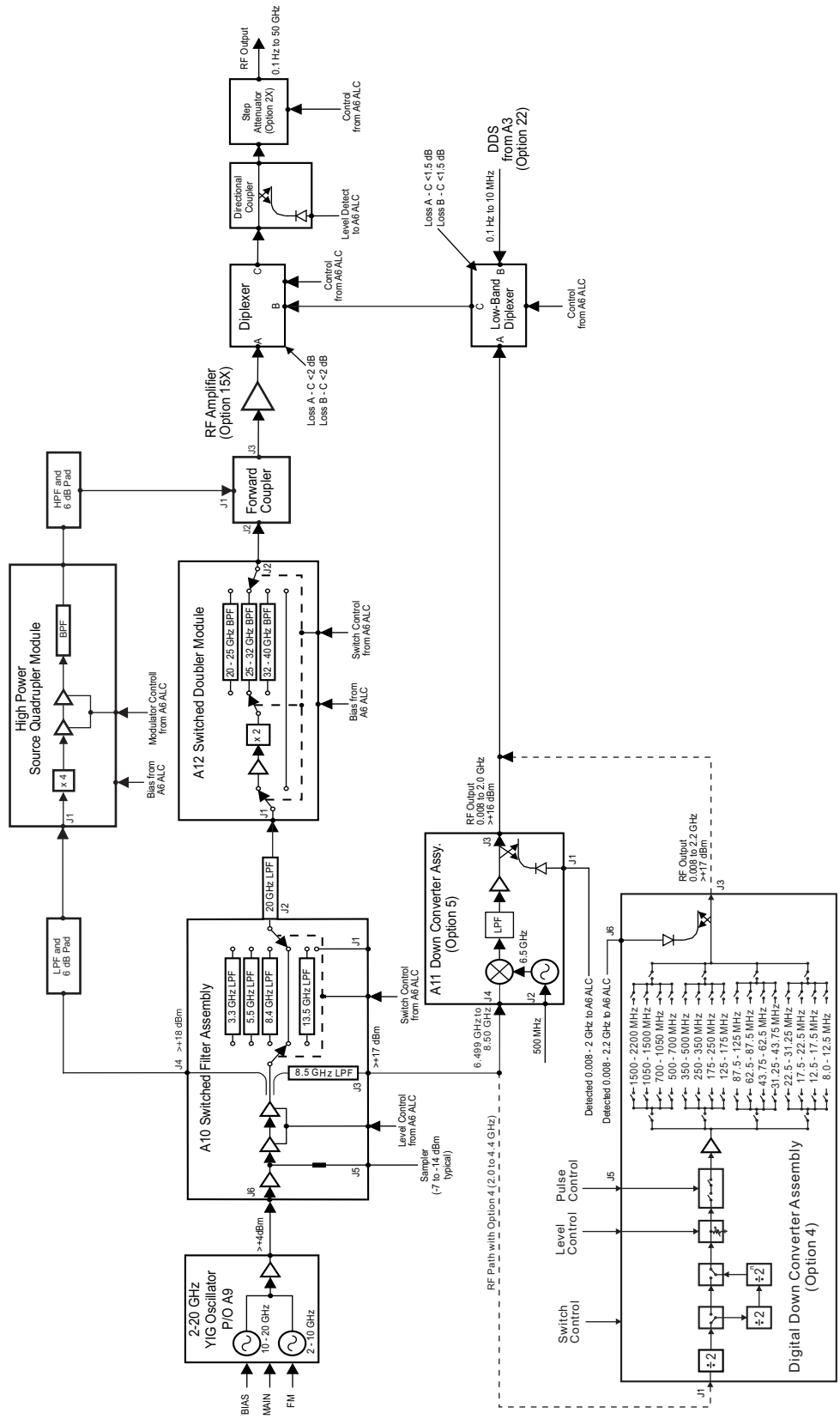

Figure 2-11. Block Diagram of the RF Deck Assembly for Model MG3695C with Options 4 or 5, 15, and 22

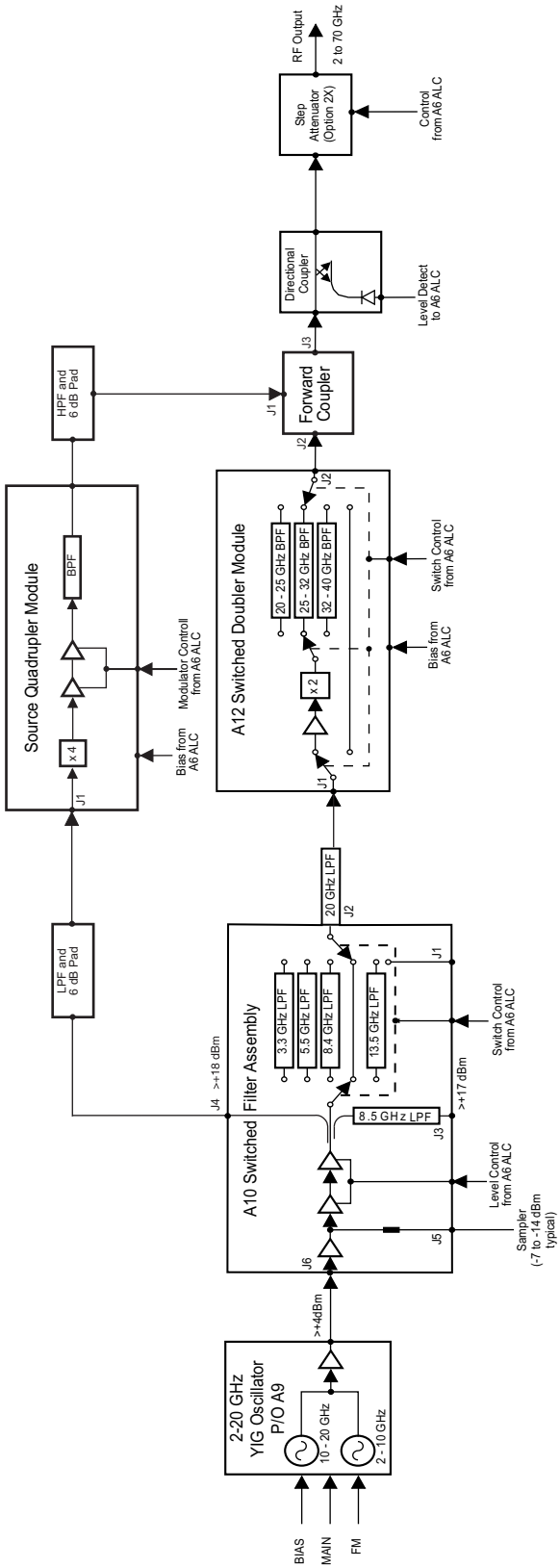

Figure 2-12. Block Diagram of the RF Deck Assembly for Model MG3697C with No Options

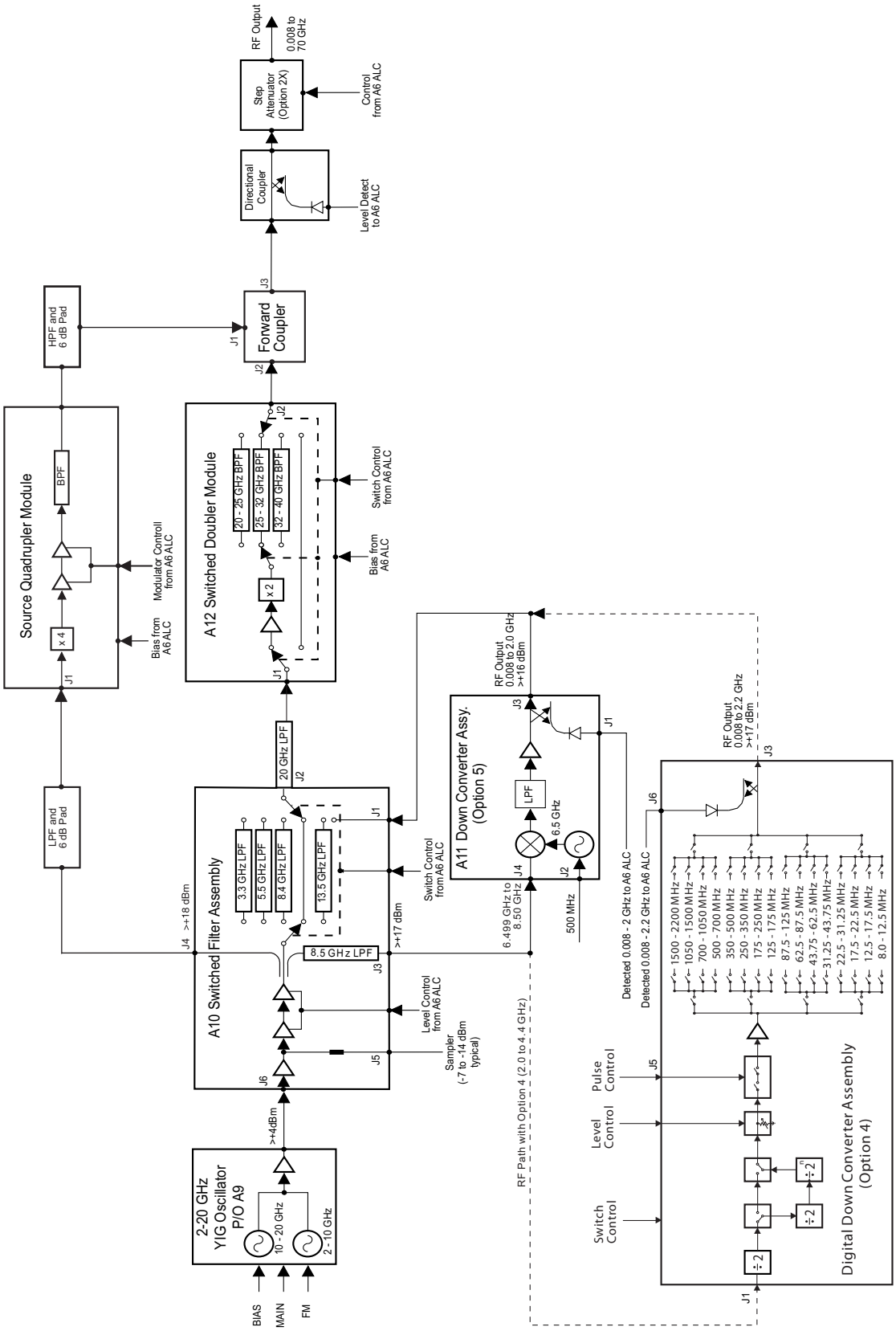

Figure 2-13. Block Diagram of the RF Deck Assembly for Model MG3697C with Option 4 or 5

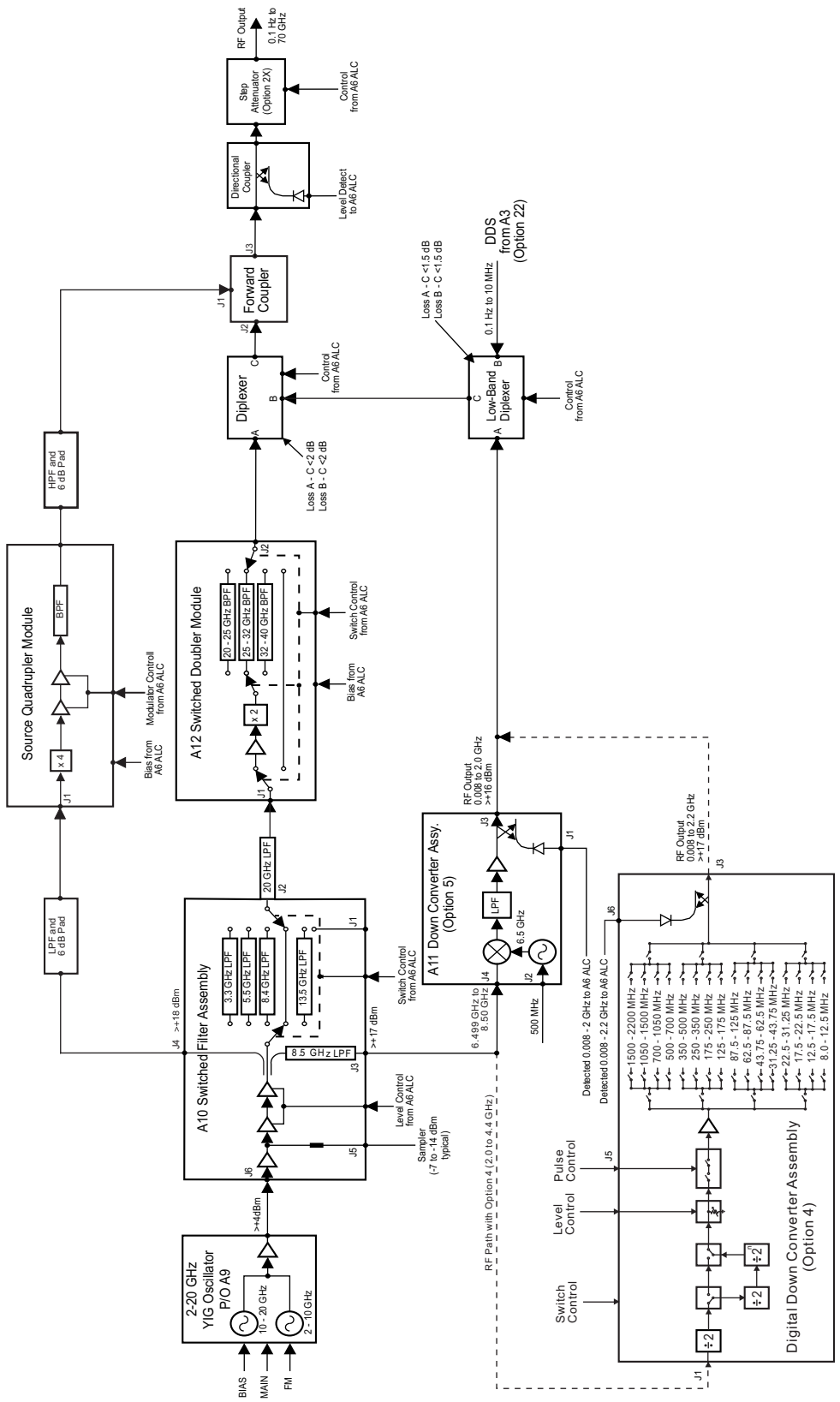

Figure 2-14. Block Diagram of the RF Deck Assembly for Model MG3697C with Option 4 or 5 and 22

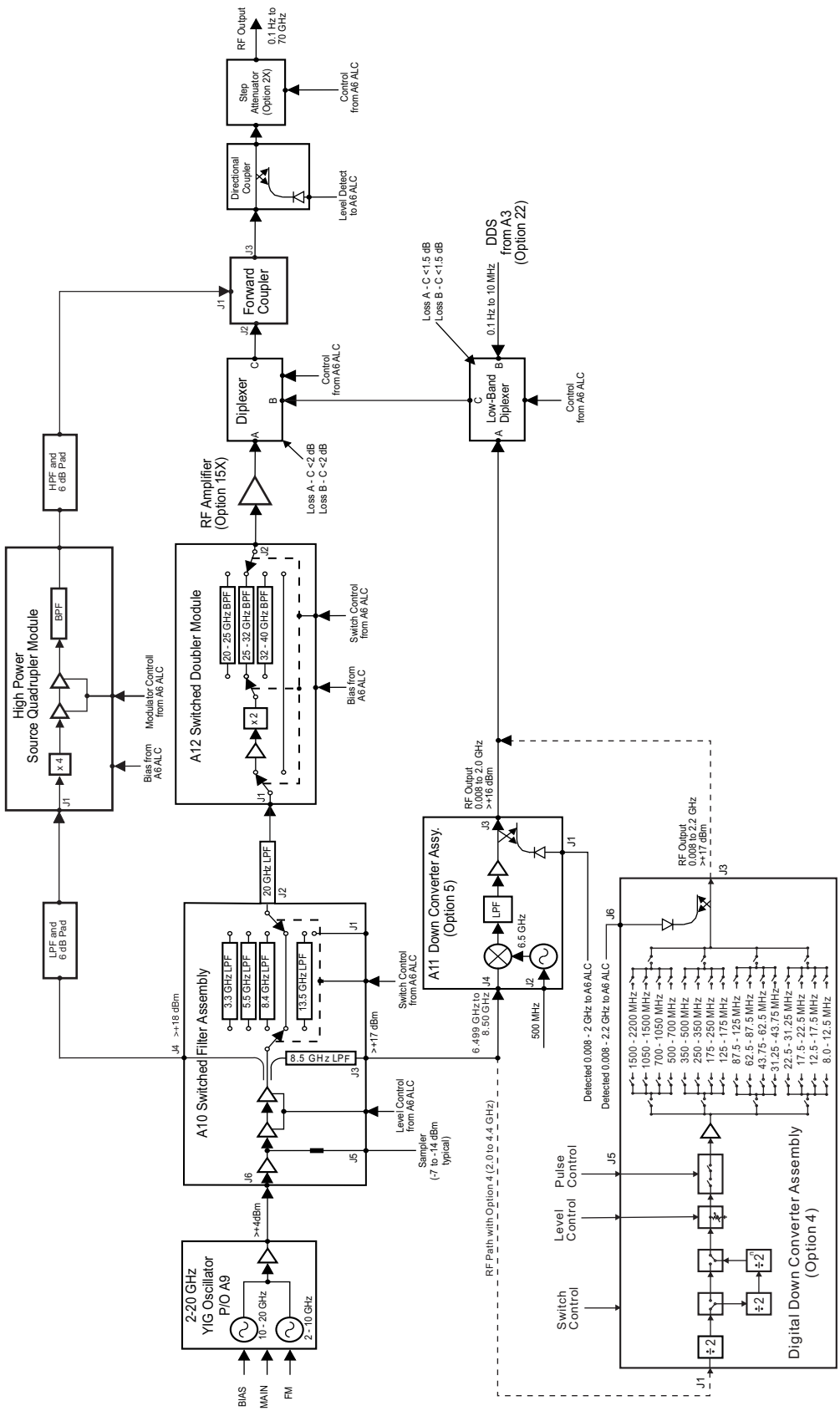

Figure 2-15. Block Diagram of the RF Deck Assembly for Model MG3697C with Option 4 or 5, 15 and 22

Chapter 3 — Performance Verification using N5531S Measuring Receiver

3-1 Introduction

This chapter contains tests that can be used to verify the performance of the series MG369xC Synthesized Signal Generator to specifications using the N5531S Measuring Receiver in addition to other standard test equipment. These tests support all instrument models having any version of firmware and instrument models with the following options:

- Option 2X, MG369xC (mechanical step attenuator)
- Option 2E, MG3691C (electronic step attenuator)
- Option 3 (ultra low phase noise)
- Option 3x (premium phase noise)
- Option 4 (digital down converter)
- Option 5 (analog down converter)
- Option 6 (analog sweep)
- Option 12 (external frequency and phase modulation)
- Option 14 (external amplitude modulation)
- Option 15x (high power output)
- Option 16 (high stability time base)
- Option 22 (low frequency audio DDS)
- Option 26x (external pulse modulation)
- Option 27 (internal low frequency and pulse generators)
- Option 28x (analog modulation suite)

Note	A number of performance verification tests in this chapter includes procedures that use the Agilent N5531S Measurement Receiver (listed in Table 3-1), which can be used to verify the MG3691C, MG3692C, MG3693C, MG3694C and MG3695C models. (The MG3697C uses standard test equipment only for performance verification. If your unit is a MG3697C, use the verification procedures in Chapter 4).

3-2 Test Records

A blank copy of a sample performance verification test record for the MG369xC models is provided in Appendix A. Each test record contains the model-specific variables called for by the test procedures. It also provides a means for maintaining an accurate and complete record of instrument performance. We recommend that you copy these pages and use them to record the results of your initial testing of the instrument. These initial test results can later be used as benchmark values for future tests of the same instrument.

3-3 Connector and Key Notation

The test procedures include many references to equipment interconnections and control settings. For all MG369xC references, specific labels are used to denote the appropriate menu key, data entry key, data entry control, or connector (such as RF Output). Most references to supporting test equipment use general labels for commonly used controls and connections (such as Span or RF Input). In some cases, a specific label is used that is a particular feature of the test equipment listed in Table 3-1 on page 3-2.

3-4 Test Equipment List

Table 3-1 provides a list of test equipment used for performance verification tests using the Agilent N5531S Measuring Receiver. The test equipment setup is critical to making accurate measurements. In some cases (except the N5531S), you may substitute certain test equipment having the same critical specifications as the test equipment indicated in the test equipment list (refer to "Measurement Uncertainty" on page 3-6).

Table 3-1. Test Equipment List (1 of 4)

Instrument	Critical Specification	Manufacturer/Model	Test Application[a]	Test Equipment Usage[b]
Computer running Windows XP	Cannot exceed the following configuration: Pentium 4 2.8 GHz 1 GB RAM 2 Serial ports CDROM Mouse Keyboard Monitor Network The computer must be dedicated during calibration and verification activities.	Dell or other common source	C, P	S, N
Phase noise measurement system	Frequency range: 5 MHz to 26.5 GHz	Agilent Phase Noise Station: Anritsu K222B Insertable F-F Anritsu 34NKF50 N Male to K Female Adapter Anritsu K241C Power Splitter Anritsu SC3855 3670K50-2 KM-KM flex cable Agilent E5052B Signal Source Analyzer Agilent E5053A Down Converter Two Anritsu K120MM-20CM Semi ridged cables Two Anritsu K120MM0-20CM Semi ridged cables (will need to be bent on site to fit) Optical Mouse, PS2/USB for E5052B USB Keyboard for E5052B	P	S, N
National Instrument PCI GPIB card	PCI GPIB card for computer	National Instrument	C, P	S, N

Table 3-1. Test Equipment List (2 of 4)

Instrument	Critical Specification	Manufacturer/Model	Test Application[a]	Test Equipment Usage[b]
Frequency counter *For use in calibration and performance verification.* *For use with performance verification only.*	Frequency range: 0.01 to 20 GHz Input impedance: 50 ohms Resolution: 1 Hz Other: External time base input Frequency range: 0.01 to 6 GHz Input impedance: 50 ohms Resolution: 1 Hz Other: External time base input	For calibration and performance verification the recommendation is Anritsu model MF2414B For performance verification the recommendation is Anritsu model MF2412B	C, P	S, N
Digital multimeter	Minimum 1% RMS ACV accuracy at 100 kHz	Fluke 8840A or Agilent 34401A	P	S, N
Function generator	Frequency: 0.1 Hz to 15 MHz	Agilent 33120A	C, P	S, N
Digital sampling oscilloscope	Frequency: 50 GHz	Agilent 86100A with 83484A 50 GHz module	P	S, N
Frequency reference	Frequency: 10 MHz Accuracy: 5 x 10^{-12} parts/day	Absolute Time Corp., Model 300 **or** Symmetricom (Datum) Model 9390-9600	C, P	S, N
Attenuator for instrument model numbers MG3691C through MG3694C	Frequency range: DC to 40 GHz Attenuation: 3, 6, 10, and 20 dB (sizes and counts are determined depending on options and maximum output power of instrument)	Anritsu part number SC7879 K set of attenuators (41KC-3, 41KC-6, 41KC-10, 41KC-20) (Must be calibrated - See footnote [c]). **or** Anritsu, model 41KC-3, 41KC-6, 41KC-10 or 41KC-20 (Must be calibrated - See footnote [c])	C, P	S, N
Attenuator for instrument model numbers MG3695C through MG3697C	Frequency Range: DC to 67 GHz Attenuation: 3, 6, 10, and 20 dB (sizes and counts are determined depending on options and maximum output power of instrument)	Anritsu part number SC7880 V set of attenuators (41V-3, 41V-6, 41V-10, 41V-20) (Must be calibrated - See footnote [d]) **or** Anritsu, model 41V-3, 41V-6, 41V-10 and 41V-20 (Must be calibrated - See footnote [d])	C, P	S, N
BNC Tee	Connectors: 50 Ohm BNC	Any common source	C, P	S, N
Generic 50 Ohm BNC RF cables and connectors		Any common source	C, P	S, N
Generic GPIB cables		Any common source	C, P	S, N
BNC to SMA adapter	BNC to SMA Adapter	Any common source	P	S, N

Table 3-1. Test Equipment List (3 of 4)

Instrument	Critical Specification	Manufacturer/Model	Test Application[a]	Test Equipment Usage[b]
Special Serial I/O Cable Assembly	Provides interface between the MG369xC and the PC	Anritsu P/N: T1678	C, P	S, N
N5531S which contains: AT-E4448A PSA Spectrum Analyzer 3 Hz -50 GHz with Options: AT-E4448A-107 Audio input 100 kOhm AT-E4448A-110 RF/uW internal preamplifier AT-E4448A-111 USB device side I/O interface AT-E4448A-115 512 MB user memory AT-E4448A-123 Switchable MW Preselector Bypass AT-E4448A-233 Built-in measuring receiver personality AT-N1912A Power meters -P-series, dual channel with options: AT-N1912A-101 Front panel sensor and power ref connectors AT-N1912A-903 Power cord, United States and Canada 120v, NEMA 5-15P male plug		Agilent N5531S	P	N
AT-N5532B Sensor Module with option: AT-N5532B-550 30 MHz to 50 GHz, APC 2.4(M) input connector		Agilent N5532B option 550	P	N
AT-N5532B Sensor Module with option: AT-N5532B-504 100 kHz to 4.2 GHz, type N(m) input connector		Agilent N5532B option 504	P	N
AT-N5532B-019 Output adapter for N191xA P-series power meter (Qty 2, one per power sensor))		Agilent N5532B-019	p	N
LAN cross over cable to Connect Power Meter (N1912A) to PSA (E4448A)	Cross over cable	Common Source or Anritsu part number 3-806-152	P	N
Adapter V male to K female	Adapter V(m) to K(f)	Anritsu 34VKF50 (Must be calibrated - See footnote [c])	P, C	S, N

Table 3-1. Test Equipment List (4 of 4)

Instrument	Critical Specification	Manufacturer/Model	Test Application[a]	Test Equipment Usage[b]
Adapter 2.4 mm (f) to 2.92 mm (K) female	Adapter 2.4 mm (f) to 2.92 mm (K) (f)	Agilent 1250-3782 (Must be calibrated - See footnote [c]) Used with power sensor N5532B option 504	P	N
Adapter 2.4 mm female to 2.92 mm (K) male	Adapter 2.4 mm(f) to 2.92 mm (K)(m)	Agilent 11904D (Must be calibrated - See footnote [c])	P	N
Adapter 2.4 mm female to N male	Adapter 2.4 mm (f) to N (m)	Agilent 11903-60002 (Must be calibrated - See footnote [e])	P	N
Adapter K male to N female for power sensor SC7400 and N5532B opt. 504	Adapter K (m) to N (f)	Anritsu 34NFK50 (Must be calibrated - See footnote [e])	P, C	S, N
Adapter N male to K female	Adapter N male to K female	Anritsu 34NKF50 (Must be calibrated - See footnote [e])	P, C	S, N
Adapter 2.4 mm female to 2.4 mm female	Adapter 2.4 mm (f) to 2.4 mm (f)	Aglient 11900B (Must be calibrated - See footnote [f]) Used with power sensor N5532B option 550	P	N
Adapter 1.85 mm (V) male to 2.4 mm female	Adapter 1.85 mm (V) (m) to 2.4 mm (f)	Pasternack PE9673 (Must be calibrated - See footnote [f])	P	N
Armored Semi Rigid Test Port Cable (K Connector Female to K Connector Male)	Armored Semi Rigid Test Port Cable (K Connector Female to K Connector Male)	Anritsu 3670K50-2 (Must be calibrated - See footnote [c] [g])	P, C	S, N
Armored Semi Rigid Test Port Cable (V Connector Female to V Connector Male)	Armored Semi Rigid Test Port Cable (V Connector Female to V Connector Male)	Anritsu 3670V50A-2 (Must be calibrated - See footnote [d] [g])	P, C	S, N

a. P = Performance Verification Tests, C = Calibration, T = Troubleshooting

b. S = Standard Test Equipment, N = N5531S Measurement Receiver equipment

c. Calibrated at the following data points: 100 kHz, 1 MHz, 10 MHz, 100 MHz, 500 MHz to 40 GHz in 500 MHz steps (Refer to Section 3-5 for maximum permissible tolerance of Return Loss (RL).

d. Calibrated at the following data points: 100 kHz, 1 MHz, 10 MHz, 100 MHz, 500 MHz to 67 GHz in 500 MHz steps (Refer to Section 3-5 for maximum permissible tolerance of Return Loss (RL).

e. Calibrated at the following data points: 100 kHz, 1 MHz, 10 MHz, 100 MHz, 500 MHz to 4 GHz in 500 MHz steps. (Refer to Section 3-5 for maximum permissible tolerance of Return Loss (RL).

f. Calibrated at the following data points: 100 kHz, 1 MHz, 10 MHz, 100 MHz, 500 MHz to 50 GHz in 500 MHz steps.

g. These cables are not designed for repeated bending. Bend them into the desired shape, then avoid further bending.

3-5 Measurement Uncertainty

The test records found in Appendix A specify a measurement uncertainty. The measurement uncertainty listed in each test record includes the best estimate of the errors contributed by the measurement, test equipment, standards, and other correction factors (for example, calibration factors and mismatch error) based on the suggested equipment, the equipment setup, and the prescribed test procedure. Most of the uncertainties are type-B per the ISO/IEC TAG 4 Guide for the Expression of Uncertainty in Measurement (GUM).

Maximum Permissible Tolerance of Return Loss of Adapters, Attenuators and Cables

The uncertainty budgets listed in the performance verification section were derived from measured values of calibrated attenuators, cables and adapters. In order to achieve the same level of uncertainty, it is important to perform calibrations of attenuators, cables and adapters which are recommended in the performance verification section.

Note	Connector Type Nomenclature: 1.85 mm = V-connector; 2.92 mm = K-connector

Adapters

Maximum permissible tolerances of the adapters listed below are tabulated in Table 3-2 through Table 3-5.

- Adapter 1.85 mm (m) to 2.4 mm (f) part number PE9673
- Adapter 2.4 mm (f) to 2.92 mm (m) part number 11904D
- Adapter 1.85 mm (m) to 2.92 mm (f) part number 34VKF50
- Adapter 2.92 mm (m) to N (f) part number 34NFK50

Table 3-2. Adapter1.85 mm (m) to 2.4 mm (f) part number **PE9673** - Maximum Permissible Tolerances

Frequency	Return loss (dB)	Reflection Coefficient	Return loss (dB)	Reflection Coefficient
Connector Type	**1.85 mm (m)**	**1.85 mm (m)**	**2.4 mm (f)**	**2.4 mm (f)**
(0.0001 to 10) GHz	30	0.032	30	0.032
(10.05 to 20) GHz	25	0.056	24	0.063
(20.5 to 30) GHz	21	0.089	21	0.089
(30.5 to 40) GHz	20	0.100	15	0.178
(40.5 to 50) GHz	15	0.178	15	0.178

Table 3-3. Adapter 2.4 mm (f) to 2.92 mm (m) part number **11904D** - Maximum Permissible Tolerances

Frequency	Return loss (dB)	Reflection Coefficient	Return loss (dB)	Reflection Coefficient
Connector Type	**2.92 mm (m)**	**2.92 mm (m)**	**2.4 mm (f)**	**2.4 mm (f)**
(0.0001 to 10) GHz	40	0.010	37	0.014
(10.05 to 20) GHz	34	0.020	24	0.014
(20.5 to 30) GHz	36	0.016	31	0.028
(30.5 to 40) GHz	27	0.045	28	0.040

Table 3-4. Adapter 1.85 mm (m) to 2.92 mm (f) part number **34VKF50** - Maximum Permissible Tolerances

Frequency	Return loss (dB)	Reflection Coefficient	Return loss (dB)	Reflection Coefficient
Connector Type	**1.85 mm (m)**	**1.85 mm (m)**	**2.92 mm (f)**	**2.92 mm (f)**
(0.0001 to 10) GHz	33	0.022	32	0.025
(10.05 to 20) GHz	34	0.020	32	0.025
(20.5 to 30) GHz	25	0.056	23	0.071
(30.5 to 40) GHz	23	0.071	22	0.079

Table 3-5. Adapter 2.92 mm (m) to N (f) part number **34NFK50** - Maximum Permissible Tolerances

Frequency	Return loss (dB)	Reflection Coefficient	Return loss (dB)	Reflection Coefficient
Connector Type	**2.92 mm (m)**	**2.92 mm (m)**	**N (f)**	**N (f)**
(0.0001 to 4) GHz	40	0.010	40	0.010

Attenuators

Maximum permissible tolerances of the 10 dB attenuators listed below are tabulated in Table 3-6 and Table 3-7

- 2.92 mm Attenuator kit (3, 6, 10 and 20 dB) part number SC7879
- 1.85 mm Attenuator kit (3, 6, 10 and 20 dB) part number SC7880

Table 3-6. 2.92 mm Attenuator (10 dB) from kit **SC7879** - Maximum Permissible Tolerances

Frequency	Return loss (dB)	Reflection Coefficient	Return loss (dB)	Reflection Coefficient
Connector Type	**2.92 mm (m)**	**2.92 mm (m)**	**2.92 mm (f)**	**2.92 mm (f)**
(0.0001 to 10) GHz	37	0.014	35	0.018
(10.05 to 20) GHz	31	0.028	35	0.056
(20.5 to 30) GHz	24	0.063	23	0.071
(30.5 to 40) GHz	24	0.063	23	0.071

Table 3-7. 1.85 mm Attenuator (10 dB) from kit **SC7880** - Maximum Permissible Tolerances

Frequency	Return loss (dB)	Reflection Coefficient	Return loss (dB)	Reflection Coefficient
Connector	**1.85 mm (m)**	**1.85 mm (m)**	**1.85 mm (f)**	**1.85 mm (f)**
(0.0001 to 10) GHz	37	0.014	31	0.028
(10.05 to 20) GHz	31	0.028	28	0.040
(20.5 to 30) GHz	24	0.063	29	0.035
(30.5 to 40) GHz	22	0.079	23	0.071
(40.5 to 50) GHz	17	0.141	18	0.126

Cables

Maximum permissible tolerances of the cables listed below are tabulated in Table 3-8 and Table 3-9

- Armored Semi Rigid Test Port Cable (2.92 mm Connector Female to 2.92 mm Connector Male) part number 3670K50-2
- Armored Semi Rigid Test Port Cable (1.85 mm Connector Female to 1.85 mm Connector Male) part number 3670V50A-2

Table 3-8. Armored Semi Rigid Test Port Cable (2.92 mm Connector Female to 2.92 mm Connector Male) part number **3670K50-2** - Maximum Permissible Tolerances

Frequency	Return loss (dB)	Reflection Coefficient	Return loss (dB)	Reflection Coefficient
Connector	**2.92 mm (m)**	**2.92 mm (m)**	**2.92 mm (f)**	**2.92 mm (f)**
(0.0001 to 10) GHz	27	0.045	27	0.045
(10.05 to 20) GHz	21	0.089	23	0.071
(20.5 to 30) GHz	23	0.071	22	0.079
(30.5 to 40) GHz	22	0.079	21	0.089

Table 3-9. Armored Semi Rigid Test Port Cable (1.85 mm Connector Female to 1.85 mm Connector Male) part number 3670V50A-2 - Maximum Permissible Tolerances

Frequency	Return loss (dB)	Reflection Coefficient	Return loss (dB)	Reflection Coefficient
Connector	**1.85 mm (m)**	**1.85 mm (m)**	**1.85 mm (f)**	**1.85 mm (f)**
(0.0001 to 10) GHz	35	0.018	33	0.022
(10.05 to 20) GHz	26	0.050	27	0.045
(20.5 to 30) GHz	24	0.063	25	0.056
(30.5 to 40) GHz	22	0.079	22	0.079
(40.5 to 50) GHz	22	0.079	21	0.089

3-6 Internal Time Base Aging Rate Test (Optional)

The following test can be used to verify that the MG369xC 10 MHz time base is within its aging specification. The instrument derives its frequency accuracy from an internal 10 MHz crystal oscillator standard. (With Option 16 installed, frequency accuracy is derived from an internal high-stability 10 MHz crystal oscillator.) An inherent characteristic of crystal oscillators is the effect of crystal *aging* within the first few days to weeks of operation. Typically, the frequency of the crystal oscillator increases slightly at first, then settles to a relatively constant value for the rest of its life.

Note	Do not confuse crystal aging with other short term frequency instabilities, for example, noise and temperature. The internal time base of the instrument may not achieve its specified aging rate before the specified warm-up time of 7 to 30 days has elapsed; therefore, this performance test is optional.

For the greatest absolute frequency accuracy, allow the MG369xC to warm up until its RF output frequency has stabilized (usually 7 to 30 days). Once stabilized, the change in reference oscillator frequency should remain within the aging rate if (1) the time base oven is not allowed to cool, (2) the instrument orientation with respect to the earth's magnetic field is maintained, (3) the instrument does not sustain any mechanical shock, and (4) ambient temperature is held constant. This test should be performed upon receipt of the instrument and again after several days or weeks to fully qualify the aging rate.

Note	Before performing this procedure ensure that all test equipment is calibrated. Refer to the manufacturer's test equipment manual.

Note	For test settings and recording test data for this section refer to page A-2 in Appendix A, "Test Records (N5531S Test Equipment)".

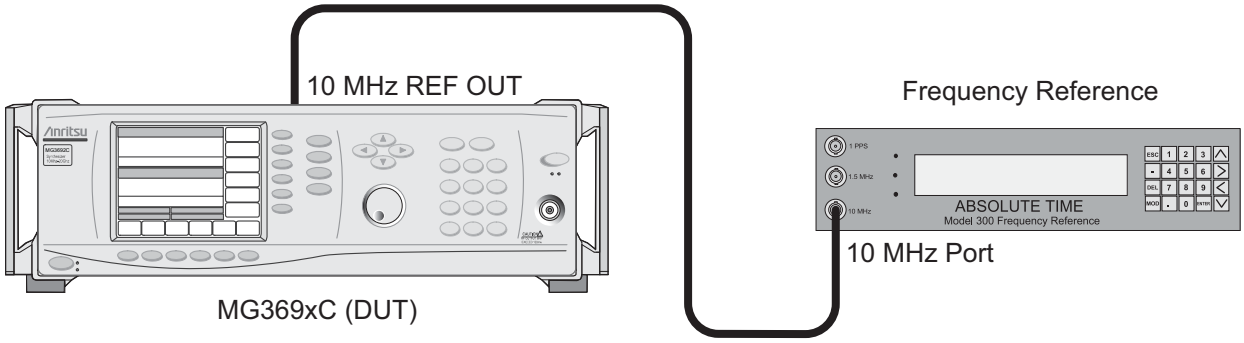

Figure 3-1. Equipment Setup for Internal Time Base Aging Rate Tests

Note	There are two procedures for Internal Time Base Aging Rate based on the frequency reference used. The first procedure is for Absolute Time Corp model 300 use, the second is for Symmetricom (Datum) model 9390-9600 use.

Internal Time Base Aging Rate Test with Absolute Time Model 300

Test Setup

Connect the MG369xC rear panel 10 MHz REF OUT to the frequency reference front panel input connector labeled 10 MHz when directed to do so during the test procedure.

Test Procedure

The frequency error is measured at the start and finish of the test time period of 24 hours. The aging rate is the difference between the two error readings.

1. Set up the model 300 frequency reference as follows:
   a. Press the ESC key until the MAIN MENU is displayed.
   b. At the MAIN MENU display, press 1 to select the CONFIGURATION MENU.
   c. At the CONFIGURATION MENU display, press 8 to select MEAS.
   d. Press the MOD key and use the Up/Down arrow keys to get to the menu display: MEASUREMENT = FREQ.
   e. Press the ENTER key.
   f. Press the ESC key until the MAIN MENU is displayed.
   g. At the MAIN MENU display, press 3 to select the REVIEW MENU.
   h. At the REVIEW MENU display, press 8 to select TFM.
2. Connect the MG369xC rear panel 10 MHz REF OUT signal to the frequency reference front panel 10 MHz input.
3. Wait approximately 90 minutes (default setting) until the FMFOM on the frequency reference display decreases from 9 to 1. (The default setting is recommended to achieve optimum measurements.)
4. The frequency error in the signal under test is displayed in ps/s (picoseconds/second). For example, an error of –644681 ps/s is -644681×10^{-12} or -6.44681×10^{-7} away from the 10 MHz internal reference on the frequency reference.
5. The frequency error display is continuously updated as a running 5,000-second average. The averaging smooths out the short-term instability of the oscillator.
6. Record the frequency error value displayed on the frequency reference in the test record.
7. Wait for 24 hours, then record the frequency error value in the test record.
8. The aging rate is the difference between the two frequency error values.
9. Record the computed result in the test record. To meet the specification, the computed aging rate must be $< 2 \times 10^{-9}$ per day ($< 5 \times 10^{-10}$ per day with Option 16).

Internal Time Base Aging Rate Test with Symmetricom (Datum) Model 9390-9600

Test Setup

Connect the MG369xC rear panel 10 MHz REF OUT to the Symmetricom (Datum) model 9390-9600 frequency standard rear panel BNC connector labeled J10. The frequency standard must be actively tracking at least three satellites, and the oscillator should be stabilized/locked (i.e., the front panel TRACKING and LOCKED LEDS should be illuminated).

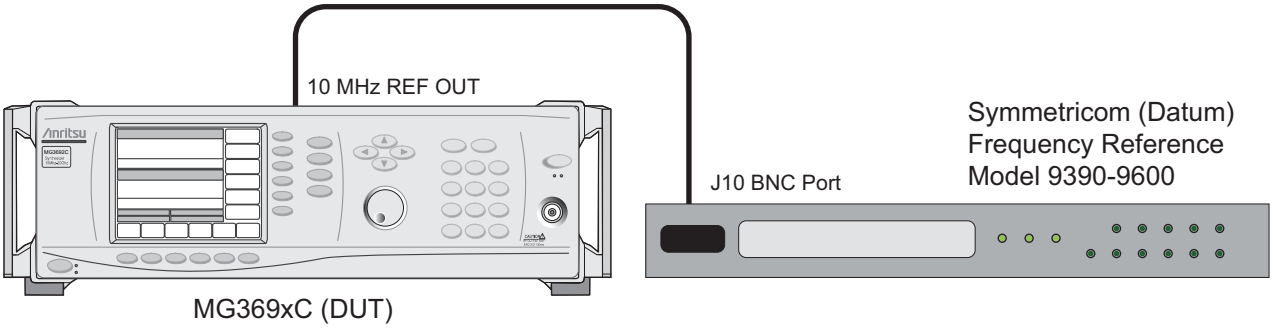

Figure 3-2. Internal Time Base Aging Rate Test Setup

Test Procedure

On the frequency standard:

1. Cycle the menu screen to the sixth screen (External Frequency Measurement) as shown below.

Row 1	EXT Freq: +0000E-14 / +0000E+00 SEC *
Row 2	<1>Enter Freq <2>ENABLE <3>DISABLE

2. Push keyboard switch “1” followed by the number 10000000. This will input the test frequency of 10 MHz.
3. Push keyboard switch “2” to ENABLE the external frequency measurement option. (pushing switch “3” will DISABLE it)
4. Confirm that the external frequency measurement option is enabled and the unit is locked by observing an “*” in row 1, column 35 of the display. If “NOTLK” appears then the frequency standard is not locked and testing must be halted. If no “*” appears then the unit is not connected properly.
5. Confirm that the measurement count has started to increment. This will be displayed in row 1, columns 20 through 29 of the display. Allow approximately 5 minutes for everything to stabilize.
6. Record the date/time of the test starting and the frequency offset displayed in row 1 column 9 through 17 on the test record as frequency error value.
7. After 24 hours push keyboard switch 3 to disable the measurement. Note that the “*” will disappear.
8. Record the date and time of the testing completion, and also the frequency offset displayed in row 1 column 9 through 17 on the test record as frequency error value (after 24 hours).
9. The aging rate is the difference between frequency error value and frequency value (after 24 hours). Record this value into the test record and compare it to the upper limit.

3-7 Spurious Signals Test

The following tests can be used to verify that the signal generator meets its spurious emissions specifications for RF output signals from 0.01 to 50 GHz.

The MG369xC's CW RF output signal is fed directly into a spectrum analyzer. The CW frequency and power level is referenced and + peak search function on the spectrum analyzer is utilized to find any spurious signals above the specified limit.

Note	Before performing this procedure ensure that all test equipment is calibrated. Refer to the manufacturer's test equipment manual.

Note	If a message similar to "System needs alignment" appears on the screen of the E4448A, perform a system alignment by pressing **System** | Alignment | Align all now. This will take a few minutes to complete.

Note	For test settings and recording test data for this section refer to Appendix A, "Test Records (N5531S Test Equipment)" starting on page A-3.

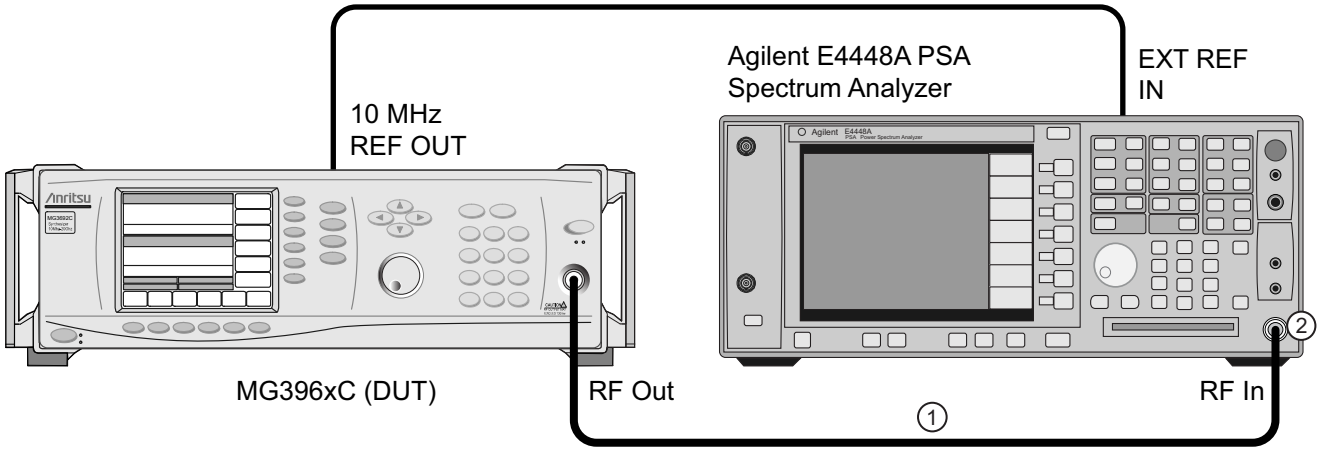

Index	Description
1	Armored Cable: The armored cable changes depending on the DUT's model number. For MG3691C, 92C, 93C and 94C use P/N 3670K50-2. For MG3695C use P/N 3670v50A-2.
2	Adapter: The adapter changes depending on the unit under test. For MG3691C, 92C, 93C and 94C use P/N 11904D. For MG3695C use P/N PE9673.

Figure 3-3. Spurious Test Setup using E4448A PSA

Harmonic Test Initial Setup

Connect the equipment shown in Figure 3-3, as follows:

1. Connect the MG369xC rear panel 10 MHz REF OUT to the spectrum analyzer's EXT REF IN.

Note	Power line and fan rotation spurious emissions are tested as part of the single sideband phase noise test in Section 3-7.

Harmonic Test Procedure

Note	For test settings and recording test data for this section refer to Appendix A, "Test Records (N5531S Test Equipment)" starting on page A-3.

1. Determine the first test frequency to test based on the test record, options and model number.
2. Set up the MG369xC as follows:
   - **a.** Reset the instrument by pressing **System**, then Reset.

     After reset, the CW menu is displayed.
   - **b.** Press Edit F1 to open the current frequency parameter for editing and set F1 to the first appropriate test frequency (based on model and options) in the test record.
   - **c.** Press Edit L1 to open the current power level parameter for editing.
   - **d.** Set L1 to +10 dBm or to the maximum specified power level, whichever is less.

     Refer to appendix B, Technical Data Sheet, for the maximum specified power levels.

     For the electronic version of this manual, refer to the MG369xC Technical Data Sheet, PN: 11410-00515 on the Anritsu internet site.
   - **e.** Connect the MG369xC RF Output to the spectrum analyzer's RF Input.
3. Set up the spectrum analyzer as follows:
   - **a.** Press **MODE** then Spectrum Analyzer soft key . Press the **Preset** key to reset the instrument.
   - **b.** Press the **System** key.
   - **c.** Press Reference soft key.
   - **d.** Press Freq Ref 10 MHz soft key and set to EXT.
   - **e.** Press the **FREQUENCY CHANNEL** key and enter the current frequency setting (F1) of the MG369xC.
   - **f.** Press the **SPAN** key and set to the first appropriate test frequency's SPAN value (based on model and options) in the test record.
   - **g.** Press the **AMPLITUDE** key.
   - **h.** Press Ref Level and enter the current power level setting (L1) of the MG369xC.
   - **i.** Press **BW/Avg** | Res BW and set to MAN.

     Set to the first appropriate test frequency's RBW (based on model and options) listed in the test record, then set the VBW values using the same process.
4. Press the **Peak Search** key
5. Press the **Marker** key then select Delta.
6. Press the **FREQUENCY** key on the spectrum analyzer and enter next harmonic frequency listed in the test records.
7. Press **Peak Search** key.
8. Record the reading from the spectrum analyzer into the test record.
9. Repeat Step 6 through Step 8 for each harmonic frequency listed for the current test frequency in the test record. Once completed with all harmonics for a test frequency, move to the next step.
10. Press Edit F1 on the MG369xC to open the current frequency parameter for editing and set F1 to the next appropriate test frequency (based on model and options) listed in the test record.
11. On the spectrum analyzer, press the **FREQUENCY** key and enter the current frequency setting (F1) of the MG369xC.

12. Determine if the power level for the MG369xC and spectrum analyzer changes based on the new frequency or options.

    If the power level changes, adjust the MG369xC L1 and spectrum analyzer **AMPLITUDE** as needed.
13. Press the **SPAN** key and enter the value listed in the test record for the appropriate test frequency.
14. Press **BW/Avg** | Res BW and enter the value listed in the test record for the appropriate test frequency.
15. Repeat Step 4 through Step 14 for each of the test frequencies listed in the test record.

Non-Harmonic Test Initial Setup

Connect the equipment, shown in Figure 3-3.

1. Connect the MG369xC rear panel 10 MHz REF OUT to the spectrum analyzer's EXT REF IN.

Note	Power line and fan rotation spurious emissions are tested as part of the single sideband phase noise test in Section 3-7.

2. Set up the spectrum analyzer as follows:
    a. Press the **Preset** key to reset the instrument.
    b. Press the **System** key.
    c. Press Reference soft key.
    d. Press Freq Ref 10 MHz soft key and set to EXT.
3. Set up the MG369xC as follows:

    Reset the instrument by pressing **System**, then Reset.

    After reset, the CW menu is displayed.
4. Connect the MG369xC RF Output to the spectrum analyzer's RF Input.

Non-Harmonic Test Procedure

Note	For test settings and recording test data for this section refer to Appendix A, "Test Records (N5531S Test Equipment)" starting on page A-8.

Part 1

1. Set up the MG369xC as follows:
    a. Press Edit F1 to open the current frequency parameter for editing.
    b. Set F1 to the appropriate test frequency (based on model and options) listed in the test record labeled Part 1.
    c. Press Edit L1 to open the current power level parameter for editing.
    d. Set L1 to +10 dBm or to the maximum specified power level, whichever is less. (Refer to Appendix B, Technical Data Sheet, for the maximum specified power levels.)
2. Set up the spectrum analyzer as follows:
    a. Press the **AMPLITUDE** key.
    b. Press REF LVL and enter the current power level setting (L1) of the MG369xC.
    c. Press the **FREQUENCY** key.
    d. Press Start Freq.
    e. Enter the current spectrum analyzer start frequency listed in the test record.

f. Press Stop Freq.

g. Enter the current spectrum analyzer stop frequency listed in the test record.

h. Press **BW/Avg** | Res BW and set to to MAN.

i. Enter the current spectrum analyzer RBW value from the test record.

3. Press the **Peak Search** key, and then press **Marker** then Delta.

4. Set up the spectrum analyzer as follows:

a. Press the **FREQUENCY** key.

b. Press Start Freq.

c. Enter the next spectrum analyzer start frequency from the test record.

d. Press Stop Freq.

e. Enter the next spectrum analyzer stop frequency from the test record.

f. Press the **BW/Avg** key.

g. If needed press Res BW to MAN.

h. Enter the next spectrum analyzer RBW value from the test record.

5. Press **Peak Search** then Next Peak.

6. Record the reading from the spectrum analyzer Delta (Marker Delta) reading into the test record.

7. Repeat steps Step 4 through Step 6 for same specified MG369xC frequency listed in the test record, Part 1.

8. Repeat Step 1 through Step 7 for same each MG369xC frequency groups listed in the test record, Part 1.

Part 2

Note	For test settings and recording test data for this section refer to Appendix A, "Test Records (N5531S Test Equipment)" starting on page A-11.

1. Set up the MG369xC as follows:

a. Press Edit F1 to open the current frequency parameter for editing.

b. Set F1 to the appropriate test frequency (based on model and options) in the test record, Part 2.

c. Press Edit L1 to open the current power level parameter for editing.

d. Set L1 to +10 dBm or to the maximum specified power level, whichever is less. (Refer to Appendix B, Technical Data Sheet, for the maximum specified power levels.)

2. Set up the spectrum analyzer as follows:

a. Press the **AMPLITUDE** key.

b. Press REF LVL and enter the current power level setting (L1) of the MG369xC.

c. Press the **FREQUENCY** key.

d. Press Center Freq.

e. Enter the current spectrum analyzer center frequency from the test record.

f. Press **SPAN**.

g. Enter the current spectrum analyzer span frequency from the test record.

h. Press the **BW/Avg** key.

i. If needed set Res BW to MAN.

j. Enter the current spectrum analyzer RBW value from the test record.

3. Press **Peak Search | Marker** | Delta, which sets the reference for the following measurements.
4. Set up the spectrum analyzer as follows:
   a. Press the **FREQUENCY** key.
   b. Press Center Freq.
   c. Enter the next spectrum analyzer center frequency from the test record.
   d. Press the **BW/Avg** key.
   e. If needed press Res BW to MAN.
   f. Enter the next spectrum analyzer RBW value from the test record.
5. Press **Peak Search** | Next Peak.
6. Record the reading from the spectrum analyzer Delta (Marker Delta) reading into the test record.
7. Repeat steps Step 4 through Step 6 for same specified MG369xC frequency listed in the test record, part 2.
8. Repeat steps Step 1 through Step 7 for same each MG369xC frequency groups listed in the test record, Part 2.

3-8 Single Sideband Phase Noise Test

The section below contains the information to perform the verification using an Agilent E5052B Signal Source Analyzer and E5053A down converter.

Note	For test settings and recording test data for this section refer to Appendix A, “Test Records (N5531S Test Equipment)” from page A-15 to page A-49

Table 3-10. Recommend Equipment List

Recommend Part Number	Quantity	Description	Vendor
K222B	1	Insertable F-F	Anritsu
34NKF50	1	N Male to K Female Adapter	Anritsu
K241C	1	Power Splitter	Anritsu
SC3855	1	3670K50-2 KM-KM flex cable	Anritsu
E5052B	1	Signal Source Analyzer	Agilent
E5053A	1	Down Converter	Agilent
K120MM-20CM	2	Semi ridged cables K120MM-20CM (this will need to be bent on site to fit)	Anritsu
	1	Mouse, Optical, PS2/USB for E5052B	
	1	Keyboard USB for E5052B	

Test Setup

Note	The MG369xC, E5052B and the E5053A Down converter must be powered on for a minimum of 30 minutes before performing these measurements. The E5052B and E5053A must be installed and set up in accordance with the instructions supplied with the instruments before continuing with this procedure.

1. Set up the MG369xC as follows:

a. Reset the instrument by pressing **System**, then Reset. Upon reset, the CW menu is displayed.

b. Press **Frequency** to open the current frequency parameter for editing.

c. Set F1 to the CW frequency indicated in the test record.

Note	Use the correct table based on the options installed in the MG369xC. Also note that serial numbers 103314 and later have a different phase specifications than the unit produced before this time frame. Because of this there are two sets of phase noise test records. Make sure to choose the correct one based on the unit's serial number.

d. Press **Edit L1** to open the current power level parameter for editing. Set L1 to +10 dBm or the maximum leveled power of the instrument which ever is lower.

Note	If you are not using the splitter, reduce L1 power level to +8 dBm.

e. Connect the MG369xC as shown in Figure 3-4.

- Connect the output of the MG369xC to the input of the splitter.
- Connect one of the outputs of the splitter to the RF input of the E5052B
- Connect one of the outputs of the splitter to the RF input of the down converter.

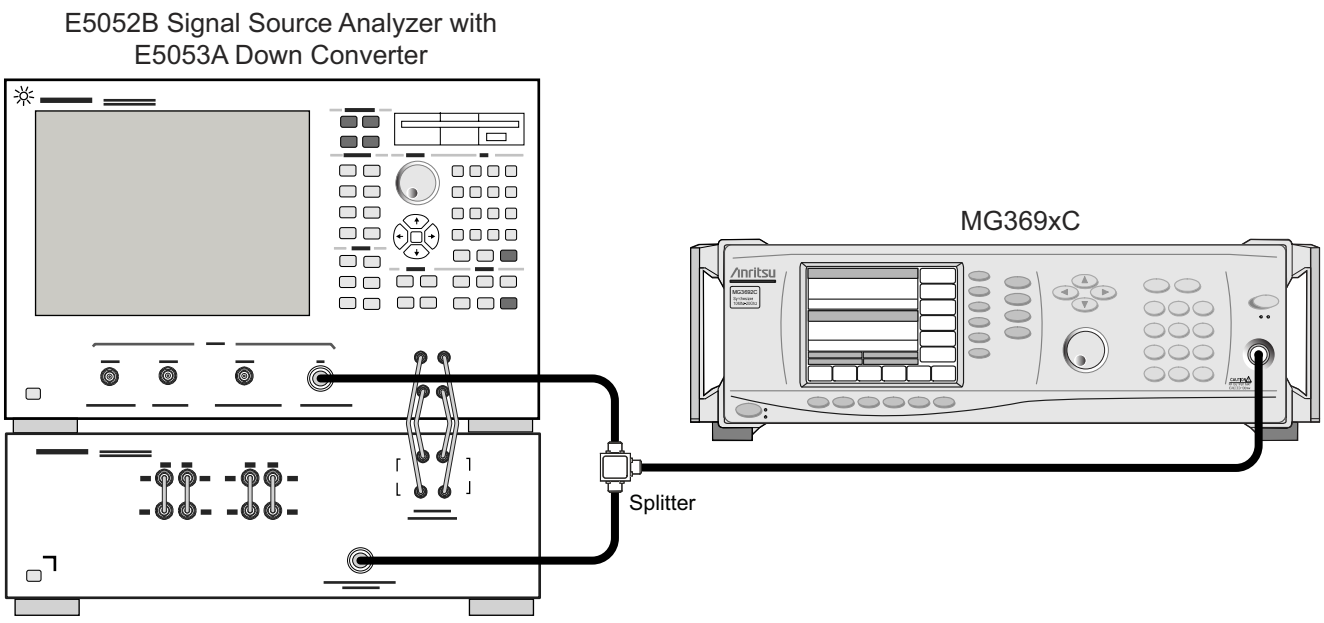

Figure 3-4. Equipment Setup for Single Sideband Phase Noise Test with E5052B and E5053A

2. E5052B and E5053A setup:

a. Press the green **Preset** button, then touch Factory.

b. Press **Measure/View**, then touch Phase Noise.

c. Press **Window Max**.

d. Press Start/Center, then touch 10 Hz.

e. Press **Stop/Span**, then touch 1 MHz.

f. Press **Marker**, then:

Touch Marker 1, enter 10 then press X1 to obtain 10 Hz.

Touch Marker 2, enter 100 then press X1 to obtain 100 Hz.

Touch Marker 3, enter 1 then press k/M to obtain 1 kHz.

Touch Marker 4, enter 10 then press k/M to obtain 10 kHz.

Touch Marker 5, enter 100 then press k/m to obtain 100 kHz.

Touch Marker 6, enter 1 then press M/u to obtain 1 MHz.

g. Press **Avg/BW**, then touch correlation and set to 10.

Test Procedure

Note	For test settings and recording test data for this section refer to Appendix A, “Test Records (N5531S Test Equipment)” from page A-15 to page A-49

1. Refer to the test records for Phase Noise. Use the correct table based on the options installed in the MG369xC.

Note	Serial numbers 103314 and later have a different phase specifications than the unit produced before this time frame. Because of this there are two sets of phase noise test records. Make sure to choose the correct one based on the unit's serial number. For serial numbers below 103314 use the records from A-15 to A-31. For Serial numbers 103314 and higher, use the records from A-33 to A-49.

2. Determine the test frequency.
3. Set the MG369xC F1 to the frequency called out in the test records.
4. Press **Input** on the E5052B.

Note	Frequencies from 10 MHz to 5 GHz are measured using the E5052B. Frequencies from 5 to 25 GHz are measured using the 5053A down converter and E5052B.

a. If the test frequencies are from 10 MHz to 5 GHz:

Touch Downconverter | RF input | E5053A.

This selects the direct measurement into the E5053A.

Touch Downconverter and confirm it is off.

b. If the test frequencies are from > 5 GHz to 25 GHz:

Touch Downconverter.

Touch Downconverter and make sure it is ON.

Touch RF input.

Touch Downconverter.

This selects the direct measurement into the downconverter.

5. Press **Setup**.

Note	There are different bands in the E5053A that need to be manually set.

a. Touch Frequency Band.

If the test frequencies is from 10 MHz to 40 MHz, touch 10M - 41 MHz.

If the test frequencies is from 39 MHz to 101 MHz, touch 39M - 101 MHz.

If the test frequencies is from 99 MHz to 1.5 GHz, touch 99M - 1.5 GHz.

If the test frequencies is from 250 MHz to 5 GHz, touch 250M - 7 GHz.

If the test frequencies is from > 5 GHz to 10 GHz (requires downconverter is on and is the selected input), touch 3G - 10 GHz.

If the test frequencies is from 9 GHz to 26.5 GHz (requires downconverter is on and is the selected input), touch 9G - 26.5 GHz.

b. Set IF Gain to:

50 dB if DUT CW frequency < 5 GHz.

20 dB if DUT CW frequency ≥ 5 GHz.

c. Touch Nominal Frequency and enter the test frequency from the test record.

6. Press ATTN.

a. Set to 0 dB if DUT CW frequency is < 5 GHz.

b. Verify it is set to 10 dB if DUT CW frequency ≥ 5 GHz.

7. Press Trigger

a. Touch Continuous.

b. Touch Single.

At the upper right of the screen the E5052B should have the approximate test frequency displayed, see Figure 3-5.

Figure 3-5. E5052B Display

8. Press **Trace/View**.

a. Press Spurious.

b. Press Power (dBc).

Now white spikes may appear on the screen indicating the spurs, see Figure 3-5.

c. Press Spurious List and a new screen will appear.

d. This screen gives the spurious signal's frequency and power levels. The format is:

`Frequency in hertz, Power level in dBc`

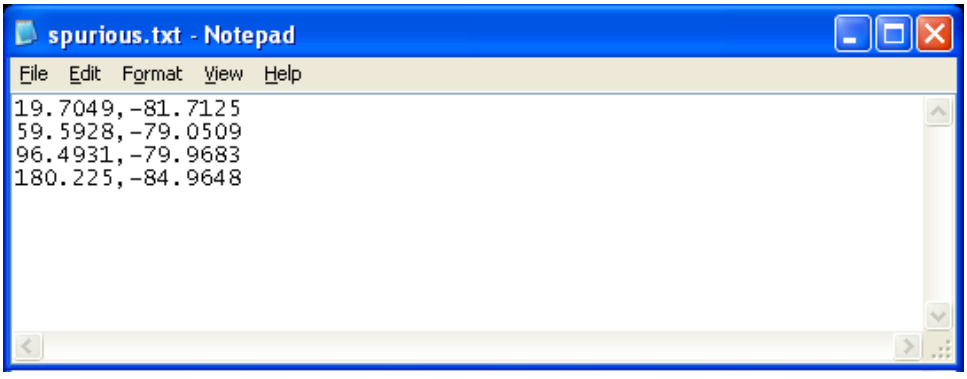

Figure 3-6. Spurious List

9. Compare these values to the appropriate frequency in the test records for "Single Sideband Phase Noise Test: Power Line and Fan Rotation Emissions". Record any values which are out of specification.

10. Close the Spurious List window.

11. Press **Trace/View**.

a. Press Spurious (note: it may be required to touch the down arrow at the bottom of the right screen to locate).

b. Touch OMIT.

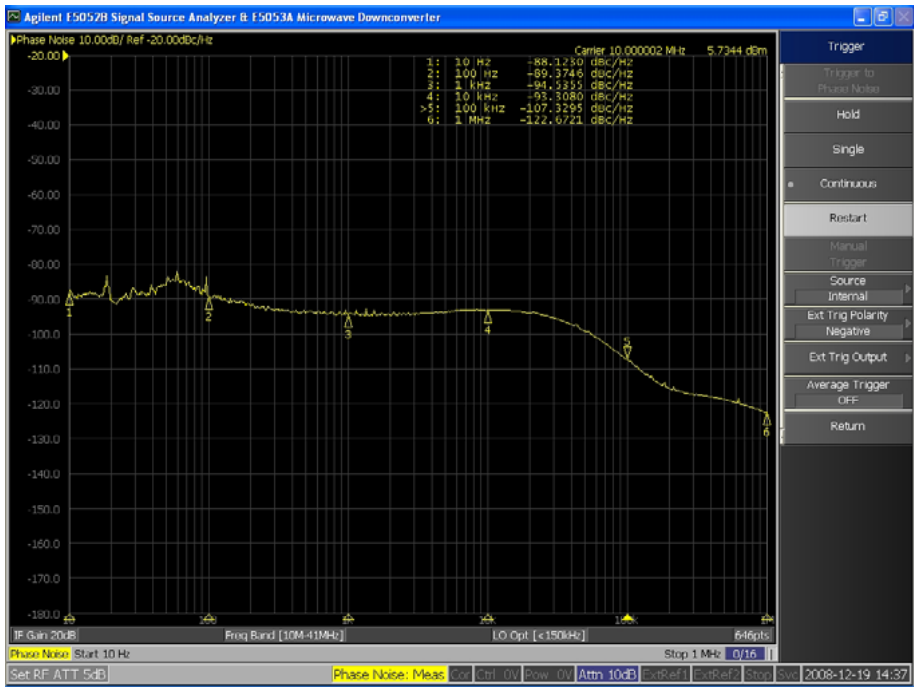

Figure 3-7. Phase Noise/Marker Values

12. Record phase noise/marker values into the test records.

13. Refer to the next frequency in the Single Sideband Phase Noise Test.

14. Press **Trigger |** Continuous.

15. Return to Step 2 and repeat this test until all test frequencies are verified for the particular model and option configuration under test.

3-9 Power Level Accuracy and Flatness

The following tests can be used to verify that the MG369xC meets its power level specifications. Power level verifications are divided into three parts: log conformity, power level accuracy, and power level flatness. Accurate power level measurements below –100 dBm are not currently feasible.

Note	This section applies to model numbers MG3691C, MG3692C, MG3693C, MG3694C or MG3695C

Note	For test settings and recording test data for this section refer to Appendix A, “Test Records (N5531S Test Equipment)” from page A-51 to page A-126

Note	If a message similar to “System needs alignment” appears on the screen of the E4448A, perform a system alignment by pressing **System** | Alignment | Align all now. This will take a few minutes to complete.

Note	Before performing this procedure ensure that all test equipment is calibrated. Refer to the manufacturer’s test equipment manual.

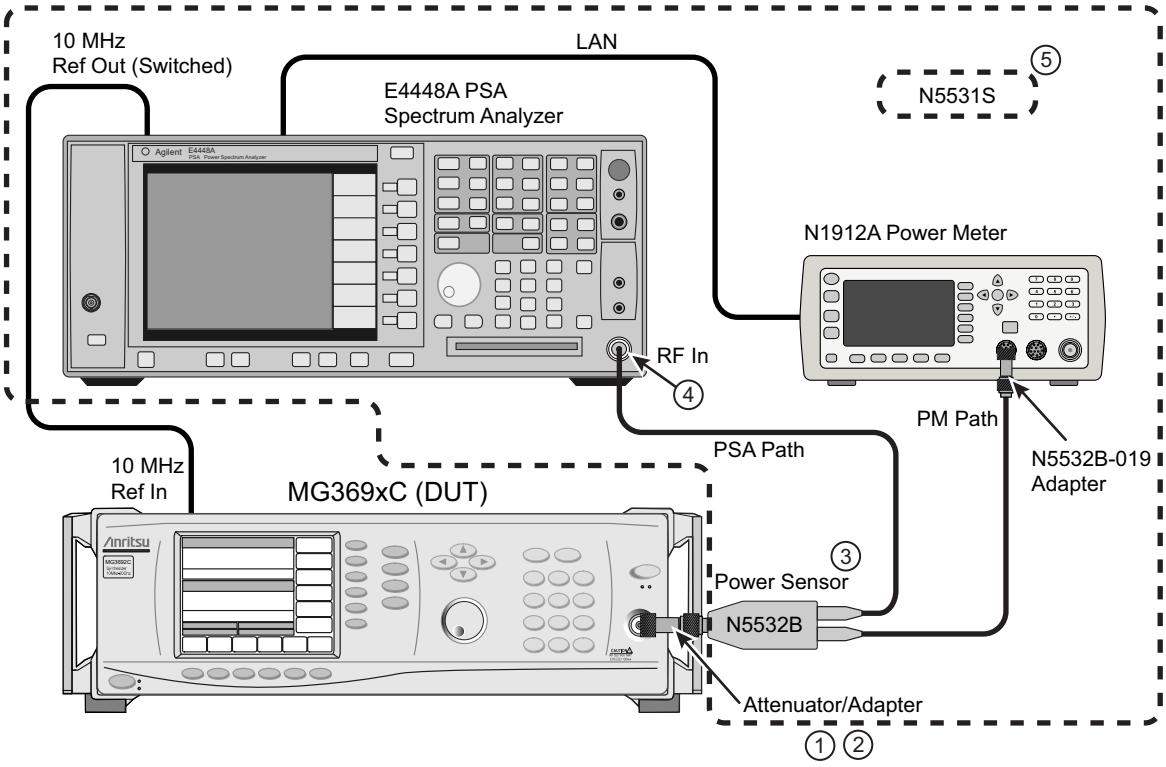

Index	Description
1	Attenuator may be required at the DUT output.
2	Depending on the MG369xC output connector, an adapter is required. See the test record for the part number.
3	Connect power sensor as directed in the procedure’s test record.
4	RF Adapter: The adapter changes depending on the power sensor installed. For N5592B option 504 use 1250-3782. For N5592B option 550 use 11900B.
5	Dotted line enclosure represents the Agilent N5531S system.

Figure 3-8. Equipment Setup for Amplitude Modulation Tests

Power Level Log Conformity - Test Setup

The log conformity test verifies the dynamic range and level accuracy of the Automatic Level Control (ALC) loop. Power level log conformity is tested in both pulse (if equipped) and non-pulse modes by stepping the output power level down in 1 dB increments from its maximum rated power level and measuring the output power level at each step.

Note	For test settings and recording test data for this section refer to Appendix A, "Test Records (N5531S Test Equipment)" from page A-51 to page A-55

Test Setup Connections

Caution	To prevent damage to the power sensor, use a fixed attenuator when measuring power levels above +29 dBm.

Connect the equipment shown in Figure 3-8 as follows:

1. Using a BNC cable, connect the rear panel 10 MHz Ref Out (switched) of the PSA to the MG369xC's 10 MHz Ref In connector.
2. Reset the MG369xC by pressing **System**, then Reset.

   After reset, the CW menu is displayed.
3. Determine the correct power sensor to install on the N5531S (E4448A PSA and N1912A Power Meter) and adapter by looking at the test record.
4. Power off the N1912A Power Meter and install the appropriate power sensor.

N5531S Setup

Set up the N5531S (PSA and P-Series power meter) as follows:

1. With the LAN cable connected, turn on both the PSA and power meter.
2. **Preset** both the PSA and power meter.
3. On the PSA verify the Frequency Reference:
   a. Press **System** | Reference
   b. Press Freq Ref and make sure Int is underlined.
   c. Press 10 MHz Out and make sure On is underlined.
   d. At this point, verify that the MG369xC displays Ext Ref to ensure that the MG369xC is phase-locked to the PSA.
4. Establish the LAN communication between the PSA and P-Series Power Meter.

   Connections between the Power Meter and PSA can be done via a network or by using a Crossover Cable (Agilent part number 8121-0545 or Anritsu part number 3-806-152). Below are the steps for a cross-over cable.

Power Meter LAN Communication Setup

1. Press **System** | Remote Interfaces | Network Manual.
2. With the first IP address box highlighted:
   a. Press **Select** | 192 | Enter
   b. Press [▸] to highlight the second IP address box, press **Select** | 168 | Enter.
   c. Press [▸] to highlight the third IP address box, press **Select** | 100 | Enter.
   d. Press [▸] to highlight the last IP address box, press **Select** | 2 | Enter.

In this way, the IP address of the power meter is set up as “192.168.100.2”.

Similarly, one can set up the “Subnet mask” of the power meter as “255.255.255.0”.

e. Press **Prev/ESC** key to return to previous menu.

f. Press Restart Network to enable the new settings.

PSA LAN Communication Setup

1. To set the PSA IP address as “192.168.100.1”, press:

System | Config I/O | IP Address | 192.168.100.1 | Enter

2. To set the PSA Subnet mask as “255.255.255.0”, press:

Subnet mask | 255.255.255.0 | Enter

3. Press **Mode** | Measuring Receiver, then press **System** | More 1 of 3 | More 2 of 3 | Power Meter | Power Meter Config | Power Meter IP Address | 192.168.100.2 | Enter

4. Press Verify Power Meter Connection

5. Press Show Setup to verify the power meter information.

Load N5532B Power Sensor Module Cal Factors

1. On the PSA, press MODE | Measuring Receiver | File | Load | Type | More 1 of 2 | Calibration Factor

2. Insert the 3 inch floppy disk of the N5532B Sensor Module Data Disk into the PSA’s floppy drive and press Dir Up | ↑ | Dir Select to ensure the “A” drive is selected.

3. Press the down arrow |↓ | to select the CFDATA file.

4. Press Load Now to load the cal factor file (CFDATA.XML) to the PSA.

At the bottom of the screen, the message “File Operation Status, A:\CFDATA>XML file loaded” should appear.

Power Meter and PSA Calibration

1. To Calibrate the PSA, press:

System | Alignments | Align All Now

Wait until its completion.

2. To calibrate the power meter:

a. Connect the RF input connector of the sensor module N5532B to the power meter’s Ref connector

b. On the PSA press:

System | More 1 of 3 | More 2 of 3 | Power Meter | Zero & Cal Power Meter

Wait until its completion.

c. Or alternatively, on the Power Meter press:

Cal | Zero+Cal

Wait until its completion.

Note	When you change the current sensor to a different type (for example, from N5532A/B Option 504 to N5532A/B Option 518), and a power measurement is selected, the Measuring Receiver displays the RECAL or UNCAL annunciator. If you are in doubt about whether the calibration factors match the power sensor, you should recalibrate.

Final Connection

3. Connect the power sensor to the RF output of MG369xC

Note	If the MG369xC output connector has an “N” connector, additional adapters will be required.

Caution	Turn only the connector sleeve portion of the sensor module. Damage can occur if torque is applied to the sensor module body. If possible, ensure the sensor rests flush against a desktop or other support. This helps prevent mechanical damage to the sensor and DUT RF Output connector.

Power Level Log Conformity - Measurement

MG369xC DUT Setup

1. Set up the MG369xC as follows:
   a. Reset the instrument by pressing **System**, then Reset.
   After reset, the CW menu is displayed.
2. If the DUT has a step attenuator (Option 2):
   a. Press **Level** to open the Level Control menu.
   b. Press ALC Mode, then press Attenuate> to open the Attenuator Control menu.
   c. Press Decouple to decouple the attenuator from the ALC loop.
3. Press **Frequency** to open the current frequency parameter for editing.
4. Set F1 to the CW frequency (or next Frequency) indicated in the test record.
5. Press Edit L1 to open the current power level parameter for editing.
6. Set L1 to the first applicable power level indicated in the test record (see technical data sheet for maximum leveled power of the unit). Please see note in test records for setting L1.

Note	For models with Option 22, rated output power is reduced by 2 dB.

Measurement

On the E4448A PSA:

1. Press **Mode |** Measuring Receiver.
2. Press **Measure** | Frequency Counter. Wait for the RF Frequency to display.
3. Press RF Power. The RF power should display on the PSA.
4. Record the reading in the test record.
5. On the MG369xC, use the cursor control key (Arrow keys) to decrement L1 to the next test power level in the test record.
6. Measure and record the power meter reading in the test record.
7. Repeat Step 5 and Step 6 for each of the test power levels listed from maximum leveled power to 0 dBm in the test record for the current CW frequency. At 0 dBm record the reading and continue to the next step.

On the N5531S (E4448A):

8. Press **Measure.**
9. Press Tuned RF Level.

10. Wait for measurement to appear then press Meas Setup.
11. Read the measured value and calculate the differences between power meter and RF tuned receiver as follows:

    (Test record reading at 0 dBm for the current test frequency) – Receiver Reading = Offset
12. Record the offset reading in the test record.
13. On the MG369xC, use the cursor control key (Arrow keys) to decrement L1 to the next test power level in the test record.
14. Capture the reading on the Tuned RF receiver, subtract the offset and record the result in the test record.
15. Repeat Step 13 and Step 14 for the remaining power levels.
16. Repeat Step 3 (in "MG369xC DUT Setup") through Step 15 for all CW frequencies listed in the test record.

Measurement for Models with External Pulse Modulation

17. Press **Modulation** to open the Modulation menu.
18. Press Pulse, then select External Pulse Mode by pressing Internal/External, if required.
19. Turn the pulse mode ON by pressing On/Off.
20. Repeat Step 3 (in "MG369xC DUT Setup") through Step 16.

Power Level Accuracy - Test Setup

Note	For test settings and recording test data for this section refer to Appendix A, "Test Records (N5531S Test Equipment)" from page A-59 to page A-85

Power Level Accuracy

Power level accuracy for power levels of +30 dBm to 0 dBm are tested by stepping the output power level down in 5 dB increments from the unit's maximum rated power level and measuring the output power level using a power meter/ power sensor. The values from –5 dBm to 100 dB below maximum leveled power uses the N5531S in the Tuned RF Level mode. The process is to set the reference at 0 dBm and then lower the MG369xC power output in 5 dB increments to 100 dB below maximum leveled power.

Test Setup Connections

Connect the equipment shown in Figure 3-8 as follows:

1. Using a BNC cable, connect the rear panel 10 MHz Ref Out (switched) of the PSA to the MG369xC's 10 MHz Ref In connector.
2. Reset the MG369xC by pressing **System**, then Reset.

   After reset, the CW menu is displayed.
3. Determine the correct power sensor to install on the N5531S (PSA and P-Series power meter) and adapter by looking at the test record.
4. Power off the N1912A Power Meter and install the appropriate power sensor.

N5531S Setup

Set up the N5531S (PSA and P-Series power meter) as follows:

1. With the LAN cable connected, turn on both the PSA and power meter.
2. **Preset** both the PSA and power meter.
3. On the PSA verify the Frequency Reference:

a. Press **System** | Reference

b. Press Freq Ref and make sure Int is underlined.

c. Press 10 MHz Out and make sure On is underlined.

d. At this point, verify that the MG369xC displays Ext Ref to ensure that the MG369xC is phase-locked to the PSA.

4. Establish the LAN communication between the PSA and P-Series Power Meter in the following steps.

   Connections between the Power Meter and PSA can be done via a network or by using a Crossover Cable (Agilent part number 8121-0545 or Anritsu part number 3-806-152). Below are the steps for a cross-over cable.

Power Meter LAN Communication Setup

1. Press **System** | Remote Interfaces | Network Manual.
2. With the first IP address box highlighted:

   a. Press **Select** | 192 | Enter

   b. Press [▸] to highlight the second IP address box, press **Select** | 168 | Enter.

   c. Press [▸] to highlight the third IP address box, press **Select** | 100 | Enter.

   d. Press [▸] to highlight the last IP address box, press **Select** | 2 | Enter.

   In this way, the IP address of the power meter is set up as “192.168.100.2”.

   Similarly, one can set up the “Subnet mask” of the power meter as “255.255.255.0”.

   e. Press **Prev/ESC** key to return to previous menu.

   f. Press Restart Network to enable the new settings.

PSA LAN Communication Setup

1. To set the PSA IP address as “192.168.100.1”, press:

   System | Config I/O | IP Address | 192.168.100.1 | Enter
2. To set the PSA Subnet mask as “255.255.255.0”, press:

   Subnet mask | 255.255.255.0 | Enter
3. Press **Mode** | Measuring Receiver, then press press System | More 1 of 3 | More 2 of 3 | Power Meter | Power Meter Config | Power Meter IP Address | 192.168.100.2 | Enter
4. Press Verify Power Meter Connection
5. Press Show Setup to verify the power meter information.

Load N5532B Power Sensor Module Cal Factors

1. On the PSA, press MODE | Measuring Receiver | File | Load | Type | More 1 of 2 | Calibration Factor
2. Insert the 3" floppy disk of the N5532B Sensor Module Data Disk into the PSA’s floppy drive and press Dir Up | ↑ | Dir Select to ensure the “A” drive is selected.
3. Press the down arrow |↓ | to select the CFDATA file.
4. Press Load Now to load the cal factor file (CFDATA.XML) to the PSA.

   At the bottom of the screen, the message “File Operation Status, A:\CFDATA>XML file loaded” should appear.

Power Meter and PSA Calibration

1. To Calibrate the PSA, press:

System | Alignments | Align All Now

Wait until its completion.

2. To calibrate the power meter:
   a. Connect the RF input connector of the sensor module N5532B to the power meter's Ref connector
   b. On the PSA press:

      System | More 1 of 3 | More 2 of 3 | Power Meter | Zero & Cal Power Meter

      Wait until its completion.
   c. Or alternatively, on the Power Meter press:

      Cal | Zero+Cal

      Wait until its completion.

Note	When you change the current sensor to a different type (for example, from N5532A/B Option 504 to N5532A/B Option 518), and a power measurement is selected, the Measuring Receiver displays the RECAL or UNCAL annunciator. If you are in doubt about whether the calibration factors match the power sensor, you should recalibrate.

Final Connection

3. Connect the power sensor to the RF output of MG369xC

Note	If the MG369xC output connector has an "N" connector, additional adapters will be required.

Caution	Turn only the connector sleeve portion of the sensor module. Damage can occur if torque is applied to the sensor module body. If possible, ensure the sensor rests flush against a desktop or other support. This helps prevent mechanical damage to the sensor and DUT RF Output connector.

Power Level Accuracy - Measurement

MG369xC DUT Setup

1. Reset the instrument by pressing **System**, then Reset.

   After reset, the CW menu is displayed.
2. Press **Frequency** to open the current frequency parameter for editing.
3. Set F1 to the CW frequency (or the next frequency) indicated in the test record.
4. Press Edit L1 to open the current power level parameter for editing.
5. Set L1 to the first applicable power level indicated in the test record.

Note	For models with Option 22, rated output power is reduced by 2 dB.

6. Refer to the test record and determine if a new power sensor is required.

If so, power off the N1912A Power Meter, install the appropriate power sensor and then power on the power meter. Then return to the "Power Level Accuracy - Test Setup" section and perform Step 4 of , "N5531S Setup", and all other steps in the "Power Meter LAN Communication Setup", "PSA LAN Communication Setup", "Load N5532B Power Sensor Module Cal Factors", "Power Meter and PSA Calibration", and "Final Connection"sections.

Measurement

On the E4448A PSA:

1. Press **Mode** | Measuring Receiver.
2. Press **Measure** | Frequency Counter.

   Wait for the RF Frequency to display.
3. Press RF Power.

   The RF power should display on the PSA.
4. Record the reading in the test record.
5. On the MG369xC, use the cursor control key (Arrow keys) to decrement L1 to the next test power level in the test record.
6. Measure and record the power meter reading in the test record.
7. Repeat Step 5 and Step 6 for each of the test power levels listed from maximum leveled power to 0 dBm in the test record for the current CW frequency. At 0 dBm record the reading and continue to the next step.

On the N5531S (E4448A):

8. Press **Measure.**
9. Press Tuned RF Level.
10. Wait for measurement to appear then press Meas Setup.
11. Read the measured value and calculate the differences between power meter and RF tuned receiver as follows:

    (Test record reading at 0 dBm for the current test frequency) – Receiver Reading = Offset
12. Record the offset reading in the test record.
13. On the MG369xC, use the cursor control key (Arrow keys) to decrement L1 to the next test power level in the test record.
14. Capture the reading on the Tuned RF receiver, subtract the offset and record the result in the test record.
15. Repeat Step 13 and Step 14 for the remaining power levels.

Note	The lowest power level is determined by the Model number, options installed and test frequency. Please refer to the Technical Data Sheet for lowest tested power level.

Note	On units without option 2x (Attenuator) the minimum power is –15 dBm.

Note	If option 2x (Attenuator) is installed, the lowest tested power level is 100 dB below the maximum leveled power of the unit with the appropriate options.

16. Repeat Step 2 (in "MG369xC DUT Setup") through Step 15 for all CW frequencies listed in the test record.

Power Level Flatness - Test Setup

Note	For test settings and recording test data for this section refer to Appendix A, "Test Records (N5531S Test Equipment)" from page A-114 to page A-119

Power level flatness is tested by measuring the output power level variation during a full band sweep in the manual sweep mode.

Test Setup Connections

Connect the equipment shown in Figure 3-8 as follows:

1. Using a BNC cable, connect the rear panel 10 MHz Ref Out (switched) of the PSA to the MG369xC's 10 MHz Ref In connector.
2. Reset the MG369xC by pressing **System**, then Reset.

   After reset, the CW menu is displayed.
3. Determine the correct power sensor to install on the N5531S (E4448A PSA and N1912A Power Meter) and adapter by looking at the test record.
4. Power off the N1912A Power Meter and install the appropriate power sensor.

N5531S Setup

Set up the N5531S (PSA and P-Series power meter) as follows:

1. With the LAN cable connected, turn on both the PSA and power meter.
2. **Preset** both the PSA and power meter.
3. On the PSA verify the Frequency Reference:
   a. Press **System** | Reference
   b. Press Freq Ref and make sure Int is underlined.
   c. Press 10 MHz Out and make sure On is underlined.
   d. At this point, verify that the MG369xC displays Ext Ref to ensure that the MG369xC is phase-locked to the PSA.
4. Establish LAN communication between the PSA and P-Series Power Meter in the following steps.

   Connections between the Power Meter and PSA can be done via a network or by using a Crossover Cable (Agilent part number 8121-0545 or Anritsu part number 3-806-152). Below are the steps for a cross-over cable.

Power Meter LAN Communication Setup

1. Press **System** | Remote Interfaces | Network Manual.
2. With the first IP address box highlighted:
   a. Press **Select** | 192 | Enter
   b. Press [▸] to highlight the second IP address box, press **Select** | 168 | Enter.
   c. Press [▸] to highlight the third IP address box, press **Select** | 100 | Enter.
   d. Press [▸] to highlight the last IP address box, press **Select** | 2 | Enter.

      In this way, the IP address of the power meter is set up as "192.168.100.2".

      Similarly, one can set up the "Subnet mask" of the power meter as "255.255.255.0".
   e. Press **Prev/ESC** key to return to previous menu.
   f. Press Restart Network to enable the new settings.

PSA LAN Communication Setup

1. To set the PSA IP address as “192.168.100.1”, press:

   System | Config I/O | IP Address | 192.168.100.1 | Enter

2. To set the PSA Subnet mask as “255.255.255.0”, press:

   Subnet mask | 255.255.255.0 | Enter

3. Press **Mode** | Measuring Receiver, then press **System** | More 1 of 3 | More 2 of 3 | Power Meter | Power Meter Config | Power Meter IP Address | 192.168.100.2 | Enter

4. Press Verify Power Meter Connection

5. Press Show Setup to verify the power meter information.

Load N5532B Power Sensor Module Cal Factors

1. On the PSA, press MODE | Measuring Receiver | File | Load | Type | More 1 of 2 | Calibration Factor

2. Insert the 3" floppy disk of the N5532B Sensor Module Data Disk into the PSA’s floppy drive and press Dir Up | ↑ | Dir Select to ensure the “A” drive is selected.

3. Press the down arrow |↓ | to select the CFDATA file.

4. Press Load Now to load the cal factor file (CFDATA.XML) to the PSA.

   At the bottom of the screen, the message “File Operation Status, A:\CFDATA>XML file loaded” should appear.

Power Meter and PSA Calibration

1. To Calibrate the PSA, press:

   System | Alignments | Align All Now

   Wait until its completion.

2. To calibrate the power meter:

   a. Connect the RF input connector of the sensor module N5532B to the power meter’s Ref connector

   b. On the PSA press:

      System | More 1 of 3 | More 2 of 3 | Power Meter | Zero & Cal Power Meter

      Wait until its completion.

   c. Or alternatively, on the Power Meter press:

      Cal | Zero+Cal

      Wait until its completion

Note	When you change the current sensor to a different type (for example, from N5532A/B Option 504 to N5532A/B Option 518), and a Power measurement is selected, the Measuring Receiver displays the RECAL or UNCAL annunciator. If you are in doubt about whether the calibration factors match the power sensor, you should recalibrate.

Final Connection

3. Connect the power sensor to the RF output of MG369xC

Note	If the MG369xC output connector has an “N” connector, additional adapters will be required.

Caution	Turn only the connector sleeve portion of the sensor module. Damage can occur if torque is applied to the sensor module body. If possible, ensure the sensor rests flush against a desktop or other support. This helps prevent mechanical damage to the sensor and DUT RF Output connector.

Power Level Flatness - Measurement

Caution	To prevent damage to the power sensor, use a fixed attenuator when measuring power levels above +29 dBm.

1. Press Manual Sweep to place the instrument in the manual sweep frequency mode and to display the Manual Sweep menu.
2. With the Manual Sweep menu displayed, press the Frequency Control soft key.

   The Manual Sweep Frequency Control menu is then displayed.

Note	The minimum or maximum frequencies are based on the power sensor performance, model, options installed, and specifications.

3. Press F1 -F2.
4. Press Edit F1 and enter the lower frequency of the MG369xC under test using the next frequency range value in the test record.
5. Press Edit F2 and enter the upper frequency of the MG369xC under test using the next frequency range value in the test record.
6. Press Edit L1 to open the current power level parameter for editing.
7. Set L1 to the power level indicated in the test record.
8. Return to the Manual Sweep menu by pressing the <Previous soft key.
9. At the Manual Sweep menu, press Step Size to open the Step Size parameter for editing.
10. Enter the Step size called out in the test records.
11. Press **Frequency**.

    Fm should be highlighted.

Note	For models with Option 22, rated output power is reduced by 2 dB.

12. Refer to the test record and determine if a new power sensor is required.

    If so, power off the N1912A Power Meter, install the appropriate power sensor and then power on the power meter. Then return to the Power Level Flatness - Test Setup section and perform Step 4 of "N5531S Setup", and all other steps in the "Power Meter LAN Communication Setup", "PSA LAN Communication Setup", "Load N5532B Power Sensor Module Cal Factors", "Power Meter and PSA Calibration", and "Final Connection" sections.
13. Setup N5531S (E4448A PSA):
    a. Press **MODE** | Measuring Receiver
    b. Press **Measure** | Frequency Counter

       Wait for the RF Frequency to display
    c. Press RF Power.

       The RF power should display.

14. Make note of the power reading. This reading along with the next readings will be used to determine the min and max reading.
15. On the E4448A PSA:
    a. Press Frequency Channel
    b. Press CF Step and set it to the value called out in the test record.
    c. Press Frequency Channel
16. On the E4448A PSA use the cursor control key (Arrow keys) to decrement the frequency by the step size called out in the test record.
17. On the MG369xC press **Frequency** and use the cursor control key (Arrow keys) to decrement Fm by the step size called out in the test record.

    Verify the MG369xC and the E4448A are displaying the same frequency..
18. Monitor the value to determine if it is the new maximum power level or minimum power level.
19. Record the final maximum power level and minimum power level reading in the test record.
20. Repeat step Step 1 through Step 19 for each of the tests listed in the test records.

Maximum Leveled Power - Test Setup

Maximum leveled power is tested by measuring the output power level during a full band sweep in the manual sweep mode.

Note	For test settings and recording test data for this section refer to Appendix A, "Test Records (N5531S Test Equipment)" from page A-120 to page A-128

Test Setup Connections

Connect the equipment shown in Figure 3-8 as follows:

1. Using a BNC cable, connect the rear panel 10 MHz Ref Out (switched) of the PSA to the MG369xC's 10 MHz Ref In connector.
2. Reset the MG369xC by pressing **System**, then Reset.

   After reset, the CW menu is displayed.
3. Connect a fixed 10 dB attenuator to the MG369xC dBm RF Output.

   If the MG369xC output connector has an "N" connector, an additional "N" type attenuator will be required.
4. Determine the correct power sensor to install on the N5531S (E4448A PSA and N1912A Power Meter) and adapter by looking at the test record.
5. Power off the N1912A Power Meter and install the appropriate power sensor.

N5531S Setup

Set up the N5531S (PSA and P-Series power meter) as follows:

1. With the LAN cable connected, turn on both the PSA and power meter.
2. **Preset** both the PSA and power meter.
3. Verify the Frequency Reference:
   a. Press **System** | Reference
   b. Press Freq Ref and make sure Int is underlined.
   c. Press 10 MHz Out and make sure On is underlined.

d. At this point, verify that the MG369xC displays Ext Ref to ensure that the MG369xC is phase-locked to the PSA.

4. Establish LAN communication between the PSA and P-Series Power Meter in the following steps.

   Connections between the Power Meter and PSA can be done via a network or by using a Crossover Cable (Agilent part number 8121-0545 or Anritsu part number 3-806-152). Below are the steps for a cross-over cable.

Power Meter LAN Communication Setup

1. Press **System** | Remote Interfaces | Network Manual.
2. With the first IP address box highlighted:
   a. Press **Select** | 192 | Enter
   b. Press [▸] to highlight the second IP address box, press **Select** | 168 | Enter.
   c. Press [▸] to highlight the third IP address box, press **Select** | 100 | Enter.
   d. Press [▸] to highlight the last IP address box, press **Select** | 2 | Enter.

      In this way, the IP address of the power meter is set up as “192.168.100.2”.

      Similarly, one can set up the “Subnet mask” of the power meter as “255.255.255.0”.
   e. Press **Prev/ESC** key to return to previous menu.
   f. Press Restart Network to enable the new settings.

PSA LAN Communication Setup

1. To set the PSA IP address as “192.168.100.1”, press:

   System | Config I/O | IP Address | 192.168.100.1 | Enter
2. To set the PSA Subnet mask as “255.255.255.0”, press:

   Subnet mask | 255.255.255.0 | Enter
3. Press **Mode** | Measuring Receiver, then press **System** | More 1 of 3 | More 2 of 3 | Power Meter | Power Meter Config | Power Meter IP Address | 192.168.100.2 | Enter
4. Press Verify Power Meter Connection
5. Press Show Setup to verify the power meter information.

Load N5532B Power Sensor Module Cal Factors

1. On the PSA, press MODE | Measuring Receiver | File | Load | Type | More 1 of 2 | Calibration Factor
2. Insert the 3" floppy disk of the N5532B Sensor Module Data Disk into the PSA’s floppy drive and press Dir Up | ↑ | Dir Select to ensure the “A” drive is selected.
3. Press the down arrow |↓ | to select the CFDATA file.
4. Press Load Now to load the cal factor file (CFDATA.XML) to the PSA.

   At the bottom of the screen, the message “File Operation Status, A:\CFDATA>XML file loaded” should appear.

Power Meter and PSA Calibration

1. To Calibrate the PSA, press:

   System | Alignments | Align All Now

   Wait until its completion.
2. To calibrate the power meter:

a. Connect the RF input connector of the sensor module N5532B to the power meter's Ref connector

b. On the PSA press:

System | More 1 of 3 | More 2 of 3 | Power Meter | Zero & Cal Power Meter

Wait until its completion.

c. Or alternatively, on the Power Meter press:

Cal | Zero+Cal

Wait until its completion

Note	When you change the current sensor to a different type (for example, from N5532A/B Option 504 to N5532A/B Option 518), and a Power measurement is selected, the Measuring Receiver displays the RECAL or UNCAL annunciator. If you are in doubt about whether the calibration factors match the power sensor, you should recalibrate.

Final Connection

3. Connect the power sensor to the 10 dB pad on the RF output of MG369xC.

Note	If the MG369xC output connector has an "N" connector, additional adapters will be required.

Caution	Turn only the connector sleeve portion of the sensor module. Damage can occur if torque is applied to the sensor module body. If possible, ensure the sensor rests flush against a desktop or other support. This helps prevent mechanical damage to the sensor and DUT RF Output connector.

Maximum Leveled Power - Measurement

Note	For test settings and recording test data for this section refer to Appendix A, "Test Records (N5531S Test Equipment)" from page A-120 to page A-128

Caution	To prevent damage to the power sensor, use a fixed attenuator when measuring power levels above +29 dBm.

1. Press Manual Sweep to place the instrument in the manual sweep frequency mode and to display the Manual Sweep menu.
2. With the Manual Sweep menu displayed, press the Frequency Control soft key.

   The Manual Sweep Frequency Control menu is then displayed.

Note	The minimum or maximum frequencies are based on the power sensor performance, model, options installed, and specifications.

3. Press F1 -F2.
4. Press Edit F1 and enter the lower frequency of the MG369xC under test using the next frequency range value in the test record.
5. Press Edit F2 and enter the upper frequency of the MG369xC under test using the next frequency range value in the test record.

6. Press Edit L1 to open the current power level parameter for editing.
7. Set L1 to the power level indicated in the test record.
8. Return to the Manual Sweep menu by pressing the <Previous soft key.
9. At the Manual Sweep menu, press Step Size to open the Step Size parameter for editing.
10. Enter the Step size called out in the test records.
11. Press **Frequency**.

    Fm should be highlighted.

Note	For models with Option 22, rated output power is reduced by 2 dB.

12. Refer to the test record and determine if a new power sensor is required.

    If so, power off the N1912A Power Meter, install the appropriate power sensor and then power on the power meter. Then return to the Maximum Leveled Power - Test Setup section and perform Step 4 of "N5531S Setup", and all other steps in the "Power Meter LAN Communication Setup", "PSA LAN Communication Setup","Load N5532B Power Sensor Module Cal Factors","Power Meter and PSA Calibration", and "Final Connection" sections.
13. Setup E4448A PSA:
    a. Press **MODE**
    b. Press Measuring Receiver
    c. Press Measure
    d. Press Frequency Counter

       Wait for the RF Frequency to display
    e. Press RF Power.

       The RF power should display.
14. Make a note of the reading. This procedure requires the minimum reading from all of the frequency steps to be recorded in the test record.
15. On the E4448A PSA:
    a. Press Frequency Channel
    b. Press CF Step and set it to the value called out in the test record.
    c. Press Frequency Channel
16. On the E4448A PSA, use the cursor control key (Arrow keys) to decrement the frequency by the step size called out in the test record.
17. On the MG369xC press **Frequency** and use the cursor control key (Arrow keys) to decrement Fm by the step size called out in the test record.

    Verify the MG369xC and the E4448A are displaying the same frequency..
18. Monitor the value to determine if it is the new minimum power level.
19. Take the final minimum power level and add 10 dB to it so it matches the actual power level before the 10 dB attenuator, and record this value in the test record.
20. Repeat Step 1 through Step 19 for each of the tests listed in the test records

3-10 FM and ΦM Tests

This section provides an alternate procedure to verify the performance of the frequency and phase modulation of the MG369xC. The test setup in this procedure uses an E4448A PSA Spectrum Analyzer instead of the 8565EC Spectrum Analyzer.

Note	For test settings and recording test data for this section, refer to Appendix A, "Test Records (N5531S Test Equipment)" from page A-129 to page A-134

Test Methodology

The modulated RF output of the MG369xC is turned on and off while monitoring power level on a spectrum analyzer display. The FM accuracy is determined by measuring the delta of the Carrier Wave (FM/ΦM on and FM/ΦM off). This delta is converted to a modulation index by applying Inverse Bessel Null, Taylor Series and Newton's Method for Finding Roots calculations. The modulation index is then converted to the actual deviation and then into FM/ΦM accuracy.

Note	Before performing this procedure ensure that all test equipment is calibrated. Refer to the manufacturer's test equipment manual.

Note	If a message similar to "System needs alignment" appears on the screen of the E4448A, perform a system alignment by pressing **System** | Alignment | Align all now. This will take a few minutes to complete.

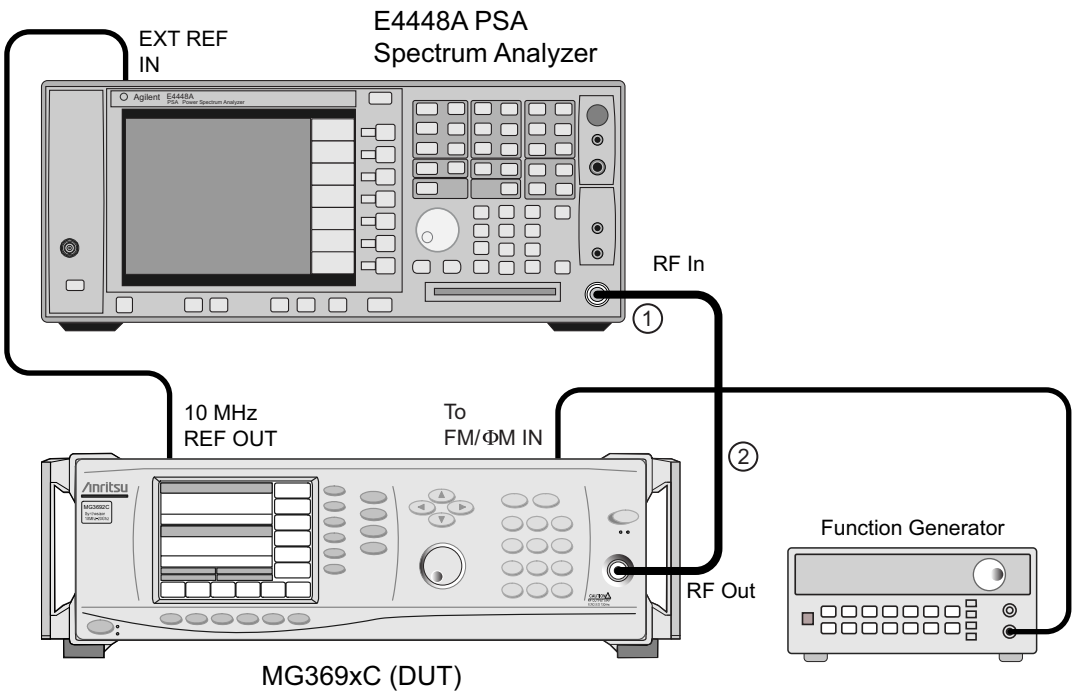

Index	Description
1	Adapter: The adapter changes depending on the unit under test. For MG3691C, 92C, 93C and 94C use P/N 11904D. For MG3695C use P/N PE9673.
2	Armored Cable: The armored cable changes depending on the DUT's model number. For MG3691C, 92C, 93C and 94C use P/N 3670K50-2. For MG3695C use P/N 3670v50A-2.

Figure 3-9. Equipment Setup for Frequency Modulation Tests

Test Setup - FM

Connect the equipment shown in Figure 3-9 on page 3-37 as follows:

1. Connect the MG369xC rear panel 10 MHz REF OUT to the spectrum analyzer's EXT REF IN.
2. Connect the Function Generator output to the MG369xC's rear panel FM/ΦM IN connector.

Note	For many of the tests in this section, the Frequency and Phase Modulation measurements may be very small and difficult to detect. In many case, the spectrum analyzer amplitude scale should be set to 1 dB/division.

Locked FM Accuracy

FM accuracy is verified at 5 GHz and 20 GHz in both the Locked and Locked Low-noise modes of operation.

Locked External FM Accuracy at 5 GHz

1. Set up the test equipment as shown in Figure 3-9 on page 3-37.
2. Set up the Function Generator as follows:
   a. Power cycle the unit to reset the unit.
   b. Press the ∿ key to select the sine wave function.
   c. Press the **Freq** key and use the rotary knob to adjust the frequency output to 99.8 kHz.
   d. Press the **Ampl** key and use the rotary knob to adjust the amplitude to 2.0 Vp-p.
3. Set up the MG369xC as follows:
   a. Reset the instrument by pressing **System**, then Reset.
      After reset, the CW menu is displayed.
   b. Press **Edit F1** to open frequency parameter for editing and set F1 to 5 GHz.
   c. Press the **Modulation** | FM | Internal/External keys and select external FM Status.
   d. Press Edit Sensitivity and set the sensitivity to 99.8 kHz/V.
   e. Connect the RF Output of the MG369xC to the spectrum analyzer's RF Input
4. Set up the spectrum analyzer as follows:
   a. Press the **Mode** key and set to Spectrum Analysis.
   b. Press the **Preset** key to reset the instrument.
   c. Press the **FREQUENCY** key and enter 5 GHz.
   d. Press the **SPAN** key and choose Zero Span.
   e. Press the **BW/Avg** key and set the Res BW to 1 kHz and the VBW to 1 Hz.
   f. Press the **AMPLITUDE** key.
   g. Press Attenuation soft key, set the value to Manual and enter 20 dB.
   h. Press Scale/Div and enter 1 dB.
   i. Press the **Peak Search** key.
5. Record the value on the spectrum analyzer as Vmodoff in the test records.
6. On the MG369xC, press On/Off to turn the FM On.
7. Record the value on the spectrum analyzer as Vmodon in the test records.
8. Using Table 3-11 on page 3-51, calculate the modulation index to six decimal places.
   Save this value as "mod index" which is used in the next step.

9. Calculate the following to three decimal places and record the results into the test record as FMerror%.

$$FM_{error\%} = ABS[((\text{mod index} \times 99800) - 99800)/99800]$$

Locked Low-Noise External FM Accuracy at 5 GHz

1. On the MG369xC, set Locked Low-Noise External FM mode on by pressing Mode>, then press Locked Low Noise.

2. Record the value on the spectrum analyzer as Vmodon in the test records.

3. On the MG369xC, press Previous then press On/Off to turn FM mode Off.

4. Record the value on the spectrum analyzer as Vmodoff in the test records.

5. Using Table 3-11 on page 3-51 calculate modulation index to six decimal places.

Save this value as "mod index" which is used in the next step.

6. Calculate the following to three decimal places and record the results into the test record as FMerror%.

$$FM_{error\%} = ABS[((\text{mod index} \times 99800) - 99800)/99800]$$

Locked External FM Accuracy at 20 GHz

1. Set up the MG369xC as follows:

- **a.** Press **Frequency** to open the current frequency parameter for editing.
- **b.** Set the frequency to 20 GHz, then to 2.3 GHz, then back to 20 GHz.
- **c.** Press **Modulation**, then press Mode> and select Locked.
- **d.** Press <Previous, ensure the FM is Off.

2. Set up the spectrum analyzer as follows:

- **a.** Press the **FREQUENCY** key and enter 20 GHz.
- **b.** Press the **BW/Avg** key and set the Res BW to 1 kHz and the Video BW to 1 Hz.
- **c.** Press the **Peak Search** key.

3. Record the value on the spectrum analyzer as Vmodoff in the test records.

4. On the MG369xC, press On/Off to turn FM mode On.

5. Record the value on the spectrum analyzer as Vmodon in the test records.

6. Using Table 3-11 on page 3-51 calculate modulation index to six decimal places.

Save this value as "mod index" which is used in the next step.

7. Calculate the following to three decimal places and record the results into the test record as FMerror%.

$$FM_{error\%} = ABS[((\text{mod index} \times 99800) - 99800)/99800]$$

Locked Low-Noise External FM Accuracy at 20 GHz

1. On the MG369xC, set Locked Low-Noise External FM mode on by pressing Mode>, then press Locked Low Noise.
2. Set up the spectrum analyzer as follows:
   a. Press the **BW/Avg** key and set the Res BW to 1 kHz and the Video BW to 1 Hz.
   b. Press the **Peak Search** key.
3. Record the value on the spectrum analyzer as Vmodon in the test records.
4. On the MG369xC, press Previous then press On/Off to turn FM Off.
5. Record the value on the spectrum analyzer as Vmodoff in the test records.
6. Using Table 3-11 on page 3-51 calculate modulation index to six decimal places.
   Save this value as "mod index" which is used in the next step.
7. Calculate the following to three decimal places and record the results into the test record as FMerror%.

$$FM_{error\%} = ABS[((\text{mod index} \times 99800) - 99800)/99800]$$

Internal FM Accuracy

Locked Internal FM Accuracy at 5 GHz (Instruments with Internal FM)

1. Disconnect the Function Generator from the MG369xC's rear panel FM/ΦM IN connector.
2. Set up the MG369xC as follows:
   a. Reset the instrument by pressing **System**, then Reset.
   After reset, the CW menu is displayed.
   b. Press Edit F1 to open the current frequency parameter for editing and set F1 to 5 GHz.
   c. Press the **Modulation** key, then press FM.
   d. Press Internal/External, to select the internal FM and ensure that the FM is Off.
   e. Press Edit Deviation and set it to 99.8 kHz.
   f. Press Edit Rate and set it to 99.8 kHz.
3. Set up the spectrum analyzer as follows:
   a. Press **FREQUENCY** and set the center frequency to 5 GHz.
   b. Press the **BW/Avg** key and set the Res BW to 1 kHz and the Video BW to 1 Hz.
   c. Press the **Peak Search** key.
4. Record the value on the spectrum analyzer as Vmodoff in the test records.
5. On the MG369xC, press On/Off to turn FM On.
6. Record the value on the spectrum analyzer as Vmodon in the test records.
7. Using Table 3-11 on page 3-51 calculate modulation index to six decimal places.
   Save this value as "mod index" which is used in the next step.
8. Calculate the following to three decimal places and record the results into the test record as FMerror%

.

$$FM_{error\%} = ABS[((\text{mod index} \times 99800) - 99800)/99800]$$

Locked Low-Noise Internal FM Accuracy at 5 GHz (Instruments with Internal FM)

1. On the MG369xC, press Mode> and select Locked Low Noise.
2. Set up the spectrum analyzer as follows:
   a. Press the **BW/Avg** key and set the Res BW to 1 kHz and the Video BW to 1 Hz.
   b. Press the **Peak Search** key.
3. Record the value on the spectrum analyzer as Vmodon in the test records.
4. On the MG369xC, press Previous, then press On/Off to turn FM Off.
5. Record the value on the spectrum analyzer as Vmodoff in the test records.
6. Using Table 3-11 on page 3-51 calculate modulation index to six decimal places.
   Save this value as "mod index" which is used in the next step.
7. Calculate the following to three decimal places and record the results into the test record as FMerror%.

$$FM_{error\%} = ABS[((\text{mod index} \times 99800) - 99800)/99800]$$

Locked Internal FM Accuracy at 20 GHz (Instruments with Internal FM)

1. Set up the MG369xC as follows:
   a. Press **Frequency** and set the frequency to 20 GHz, then 2.3 GHz, then back to 20 GHz.
   b. Press **Modulation**, then press Mode> and select Locked.
   c. Press <Previous, and confirm FM is Off.
2. Set up the spectrum analyzer as follows:
   a. Press **FREQUENCY** and set the center frequency to 20 GHz.
   b. Press the **BW/Avg** key and set the Res BW to 1 kHz and the Video BW to 1 Hz.
   c. Press the **Peak Search** key.
3. Record the value on the spectrum analyzer as Vmodoff in the test records.
4. On the MG369xC, press On/Off to turn FM On.
5. Record the value on the spectrum analyzer as Vmodon in the test records.
6. Using Table 3-11 on page 3-51 calculate modulation index to six decimal places.
   Save this value as "mod index" which is used in the next step.
7. Calculate the following to three decimal places and record the results into the test record as FMerror%.

$$FM_{error\%} = ABS[((\text{mod index} \times 99800) - 99800)/99800]$$

Locked Low-Noise Internal FM Accuracy at 20 GHz (Instruments with Internal FM)

1. On the MG369xC, press Mode> and select Locked Low Noise.
2. Set up the spectrum analyzer as follows:
   a. Press the **BW/Avg** key and set the Res BW to 1 kHz and the Video BW to 1 Hz.
   b. Press the **Peak Search** key.
3. Record the value on the spectrum analyzer as Vmodon in the test records.
4. On the MG369xC, press <Previous then press On/Off to turn FM Off.
5. Record the value on the spectrum analyzer as Vmodoff in the test records.
6. Using Table 3-11 on page 3-51 calculate modulation index to six decimal places.
   Save this value as "mod index" which is used in the next step.
7. Calculate the following to three decimal places and record the results into the test record as FMerror%.

$$FM_{error\%} = ABS[((\text{mod index} \times 99800) - 99800)/99800]$$

ΦM Accuracy - Introduction

ΦMM accuracy is verified at 5 GHz and 20 GHz in unlocked wide, unlocked narrow, locked, and locked low-noise for both external and internal modes of operation.

Note	For many of the tests in this section, the Frequency and Phase Modulation measurements may be very small and difficult to detect. In many cases, the spectrum analyzer amplitude scale should be set to 1 dB/division.

Test Setup - ΦM Accuracy

1. Set up the test equipment as illustrated in Figure 3-9 on page 3-37.
   a. Connect the MG369xC rear panel 10 MHz REF OUT to the spectrum analyzer's EXT REF IN.
   b. Connect the Function Generator output to the MG369xC's rear panel FM/ΦM IN connector.
2. Set up the Function Generator as follows:
   a. Power cycle the unit to reset it.
   b. Press the ∿ key to select the sine wave function.
   c. Press the **Freq** key and use the rotary knob to adjust the frequency output to 99.8 kHz.
   d. Press the **Ampl** key and use the rotary knob to adjust the amplitude to 2.0 Vp-p.
3. Set up the MG369xC as follows:
   a. Reset the instrument by pressing **System**, then Reset. After reset, the CW menu is displayed.
   b. Press Edit F1 to open the current frequency parameter for editing and set F1 to 5 GHz.
   c. Press the **Modulation** | ΦM | Internal/External keys to select External Status.
   d. Press Mode> and select Wide, then press <Previous.
   e. Press Edit Sensitivity and set the sensitivity to 1.00 rad/V.
   f. Connect the RF Output of the MG369xC to the spectrum analyzer's RF INPUT.

4. Set up the spectrum analyzer as follows:
   a. Press the **Mode** key and set to Spectrum Analysis
   b. Press the **Preset** key to reset the instrument.
   c. Press the **FREQUENCY** key and enter 5 GHz.
   d. Press the **Span** key and choose Zero Span.
   e. Press the **BW/Avg** key and set the Res BW to 1 kHz and the Video BW to 1 Hz.
   f. Press the **AMPLITUDE** key.
   g. Change Scale/Div to 1 dB.
   h. Press Attenuation soft key and set the value to Manual and 20 dB.
   i. Press the **Peak Search** key.

Wide External ΦM Accuracy at 5 GHz

1. Record the value on the spectrum analyzer as Vmodoff in the test records.
2. On the MG369xC, press On/Off to turn ΦM On.
3. Record the value on the spectrum analyzer as Vmodon in the test records.
4. Using Table 3-11 on page 3-51 calculate modulation index to six decimal places.
   Save this value as "mod index" which is used in the next step.
5. Calculate the following to three decimal places and record the results into the test record as ΦMerror%.

$$\Phi M_{error\%} = ABS[((\text{mod index} \times 99800) - 99800)/99800]$$

Narrow External ΦM Accuracy at 5 GHz

1. On the MG369xC, press Mode> and select Narrow, then press <Previous.
2. Set up the spectrum analyzer as follows:
   a. Press the **BW/Avg** key and set the Res BW to 1 kHz and the Video BW to 1 Hz.
   b. Press the **Peak Search** key.
3. Record the value on the spectrum analyzer as Vmodon in the test records.
4. On the MG369xC, press On/Off to turn ΦM Off.
5. Record the value on the spectrum analyzer as Vmodoff in the test records.
6. Using Table 3-11 on page 3-51 calculate modulation index to six decimal places.
   Save this value as "mod index" which is used in the next step.
7. Calculate the following to three decimal places and record the results into the test record as ΦMerror%.

$$\Phi M_{error\%} = ABS[((\text{mod index} \times 99800) - 99800)/99800]$$

Wide External ΦM Accuracy at 20 GHz

1. Set up the MG369xC as follows:
   a. Press **Frequency** and set the frequency to 20 GHz, then 2.3 GHz, then back to 20 GHz.
   b. Press **Modulation** | Mode then select Wide, then press <Previous.
   c. Press Edit Sensitivity and set the external ΦM Sensitivity to 1.00 rad/V.
   d. Press On/Off to ensure ΦM is Off.
2. Set up the spectrum analyzer as follows:
   a. Press **FREQUENCY** and set the center frequency to 20 GHz.
   b. Press the **BW/Avg** key and set the Res BW to 1 kHz and the Video BW to 1 Hz.
   c. Press the **Peak Search** key.
3. Record the value on the spectrum analyzer as Vmodoff in the test records.
4. On the MG369xC, press On/Off to turn ΦM On.
5. Record the value on the spectrum analyzer as Vmodon in the test records.
6. Using Table 3-11 on page 3-51 calculate modulation index to six decimal places.
   Save this value as "mod index" which is used in the next step.
7. Calculate the following to three decimal places and record the results into the test record as ΦMerror%.

$$\Phi M_{error\%} = ABS[((\text{mod index} \times 99800) - 99800)/99800]$$

Narrow External ΦM Accuracy at 20 GHz

1. On the MG369xC, press Mode> and select Narrow, then press <Previous.
2. Set up the spectrum analyzer as follows:
   a. Press the **BW/Avg** key and set the Res BW to 1 kHz and the Video BW to 1 Hz.
   b. Press the **Peak Search** key.
3. Record the value on the spectrum analyzer as **Vmodon** in the test records.
4. On the MG369xC, press On/Off to turn ΦM Off.
5. Record the value on the spectrum analyzer as Vmodoff in the test records.
6. Using Table 3-11 on page 3-51 calculate modulation index to six decimal places.
   Save this value as "mod index" which is used in the next step.
7. Calculate the following to three decimal places and record the results into the test record as ΦMerror%.

$$\Phi M_{error\%} = ABS[((\text{mod index} \times 99800) - 99800)/99800]$$

Wide Internal ΦM Accuracy at 5 GHz (Instruments with Internal ΦM)

1. Disconnect the Function Generator from the MG369xC's rear panel FM/ΦM IN connector.
2. Set up the MG369xC as follows:
   a. Reset the instrument by pressing **System**, then Reset.
      After reset, the CW menu is displayed.
   b. Press Edit F1 to open the current frequency parameter for editing and set F1 to 5 GHz.
   c. Press **Modulation** | ΦM | Internal/External to select Internal ΦM, then press On/Off to turn ΦM Off.
   d. Press Mode> and select Wide, then press <Previous.
   e. Press Edit Deviation and set it to 1.00 rad.
   f. Press Edit Rate and set it to 99.8 kHz.
3. Set up the spectrum analyzer as follows:
   a. Press **FREQUENCY** and set the center frequency to 5 GHz.
   b. Press the **BW/Avg** key and set the Res BW to 1 kHz and the Video BW to 1 Hz.
   c. Press the **Peak Search** key.
4. Record the value on the spectrum analyzer as Vmodoff in the test records.
5. On the MG369xC, press On/Off to turn ΦM On.
6. Record the value on the spectrum analyzer as Vmodon in the test records.
7. Using Table 3-11 on page 3-51 calculate modulation index to six decimal places.
   Save this value as "mod index" which is used in the next step.
8. Calculate the following to three decimal places and record the results into the test record as ΦMerror%.

$$\Phi M_{error\%} = ABS[((\text{mod index} \times 99800) - 99800)/99800]$$

Narrow Internal ΦM Accuracy at 5 GHz (Instruments with Internal ΦM)

1. On the MG369xC, press Mode> and select Narrow, then press <Previous.
2. Set up the spectrum analyzer as follows:
   a. Press the **BW/Avg** key and set the Res BW to 1 kHz and the Video BW to 1 Hz.
   b. Press the **Peak Search** key.
3. Record the value on the spectrum analyzer as Vmodon in the test records.
4. On the MG369xC, press On/Off to turn ΦM Off.
5. Record the value on the spectrum analyzer as Vmodoff in the test records.
6. Using Table 3-11 on page 3-51 calculate modulation index to six decimal places.
   Save this value as "mod index" which is used in the next step.
7. Calculate the following to three decimal places and record the results into the test record as ΦMerror%.

$$\Phi M_{error\%} = ABS[((\text{mod index} \times 99800) - 99800)/99800]$$

Wide Internal ΦM Accuracy at 20 GHz (Instruments with Internal ΦM)

1. Set up the MG369xC as follows:
   a. Press **Frequency** and set the frequency to 20 GHz, then to 2.3 GHz, then back to 20 GHz.
   b. Press **Modulation**, then press Mode> and select Wide.
   c. Press <Previous and set the ΦM Deviation to 1.00 rad/V.
   d. Press On/Off to ensure ΦM is Off.
2. Set up the spectrum analyzer as follows:
   a. Press **FREQUENCY** and set the center frequency to 20 GHz.
   b. Press the **BW/Avg** key and set the Res BW to 1 kHz and the Video BW to 1 Hz.
   c. Press the **Peak Search** key.
3. Record the value on the spectrum analyzer as Vmodoff in the test records.
4. On the MG369xC, press **On/Off** to turn ΦM On.
5. Record the value on the spectrum analyzer as Vmodon in the test records.
6. Using Table 3-11 on page 3-51 calculate modulation index to six decimal places.
   Save this value as "mod index" which is used in the next step.
7. Calculate the following to three decimal places and record the results into the test record as ΦMerror%.

$$\Phi M_{error\%} = ABS[((\text{mod index} \times 99800) - 99800)/99800]$$

Narrow Internal ΦM Accuracy at 20 GHz (Instruments with Internal ΦM)

1. On the MG369xC, press Mode> and select Narrow, then press <Previous.
2. Set up the spectrum analyzer as follows:
   a. Press the **BW/Avg** key and set the Res BW to 1 kHz and the Video BW to 1 Hz.
   b. Press the **Peak Search** key.
3. Record the value on the spectrum analyzer as Vmodon in the test records.
4. On the MG369xC, press On/Off to turn ΦM Off.
5. Record the value on the spectrum analyzer as Vmodoff in the test records.
6. Using Table 3-11 on page 3-51 calculate modulation index to six decimal places.
   Save this value as "mod index" which is used in the next step.
7. Calculate the following to three decimal places and record the results into the test record as ΦMerror%.

$$\Phi M_{error\%} = ABS[((\text{mod index} \times 99800) - 99800)/99800]$$

FM/ΦM Flatness and Bandwidth - Introduction

The FM/ΦM flatness and bandwidth tests verify that the MG369xC's modulated RF output meets specification while in the locked FM mode and in the narrow and wide ΦM modes.

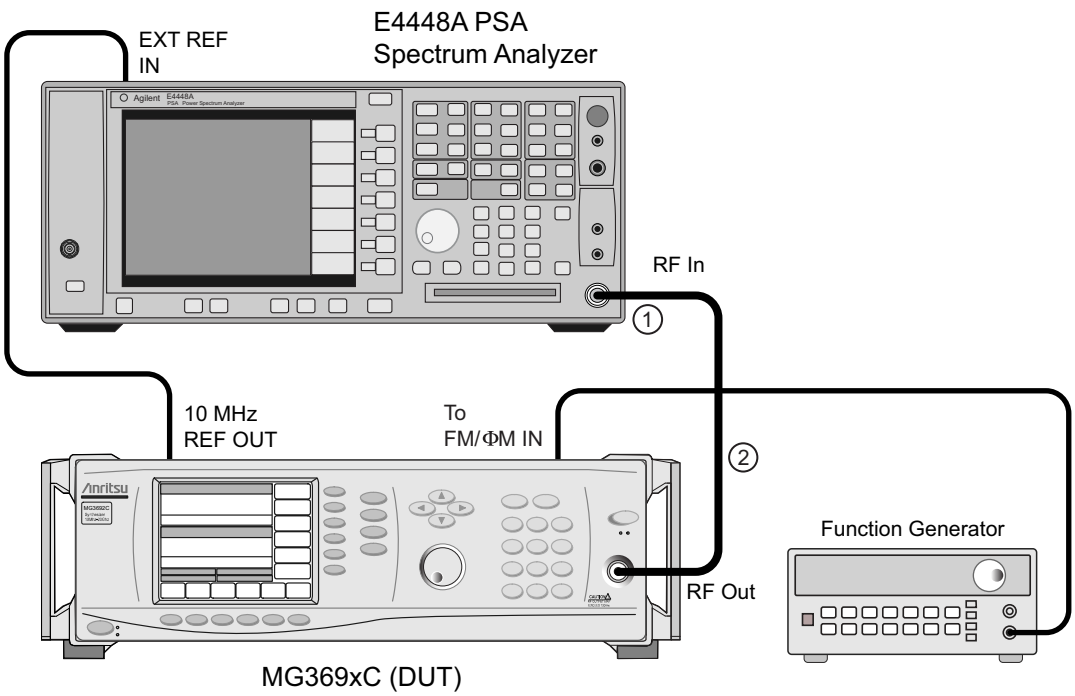

Index	Description
1	Adapter: The adapter changes depending on the unit under test. For MG3691C, 92C, 93C and 94C use P/N 11904D. For MG3695C use P/N PE9673.
2	Armored Cable: The armored cable changes depending on the DUT's model number. For MG3691C, 92C, 93C and 94C use P/N 3670K50-2. For MG3695C use P/N 3670v50A-2.

Figure 3-10. Equipment Setup for Frequency/Φ Modulation Tests

Test Setup - FM/ΦM Flatness and Bandwidth

Set up the equipment, shown in Figure 3-10, as follows:

1. Connect the RF Output of the MG369xC to the RF input of the spectrum analyzer.
2. Connect the Output port of the Function Generator to the FM/ΦM IN connector of the MG369xC.
3. Connect the 10 MHz REF OUT of the MG369xC to the EXT REF IN of the spectrum analyzer.

Note	Since a potential spur which could affect accuracy exists at 100 kHz, the measurement is performed with the Function Generator set to 99.8 kHz.

Locked FM Flatness

1. Set up the MG369xC as follows:
   a. Reset the instrument by pressing **System**, then Reset.
      After reset, the CW menu is displayed.
   b. Press Edit F1 to open the current frequency parameter for editing and set F1 to 5 GHz.
   c. Press **Modulation** | FM | Internal/External to select external FM Status.

   d. Press Edit Sensitivity and set it to 99.8 kHz/V.

2. Set up the spectrum analyzer as follows:

   a. Press the **Mode** key and set to Spectrum Analysis

   b. Press the **Preset** key to reset the instrument.

   c. Press the **FREQUENCY** key and enter 5 GHz.

   d. Press the **SPAN** key and choose Zero Span.

   e. Press the **BW/Avg** key and set the Res BW to 1 kHz and the Video BW to 1 Hz.

   f. Press the **AMPLITUDE** key, then press Scale/DIV and enter 1 dB.

   g. Press the **Peak Search** key.

3. Set up the Function Generator as follows:

   a. Power cycle the unit to reset the unit.

   b. Press the ∿ key to select the sine wave function.

   c. Press the **Freq** key and use the rotary knob to adjust the frequency output to 99.8 kHz.

   d. Press the **Ampl** key and press the green **Enter Number** key and enter 2 Vp-p.

4. Observe the trace on the spectrum analyzer. It should be just below the top of the screen at about 0 dBm or lower depending on cable loss.

5. Record the value on the spectrum analyzer as Vmodoff in the test records.

6. On the MG369xC, press On/Off to turn FM On.

   The level on the spectrum analyzer should fall.

7. Record the value on the spectrum analyzer as Vmodon in the test records.

8. Using Table 3-11 on page 3-51 calculate modulation index to six decimal places.

   Save this value as "mod index" which is used in the next step.

9. On the MG369xC, press On/Off to turn FM Off.

10. Repeat Step 3 bthrough Step 9 for each of the Function Generator frequency and MG369xC FM sensitivity pairs listed in the test record.

11. Calculate the FM flatness by comparing each of the Vmodon values from the Vmodon value at the 100 kHz rate by calculating the following to three decimal places. Record the results into the test record as FMflat.

$$FM_{flat} = 20\log((\text{mod index at 99.8 kHz})/(\text{mod index at X Hz}))$$

Narrow ΦM Flatness

1. Connect the equipment as shown in Figure 3-10 on page 3-47.

   a. Connect the MG369xC rear panel 10 MHz REF OUT to the spectrum analyzer's EXT REF IN.

   b. Connect the Function Generator Output to the MG369xC's rear panel FM/ΦM IN connector.

2. Set up the MG369xC as follows:

   a. Reset the instrument by pressing **System**, then Reset.

   After reset, the CW menu is displayed.

   b. Press Edit F1 to open the current frequency parameter for editing and set F1 to 5 GHz.

   c. Press **Modulation** | ΦM | Internal/External to select External ΦM Status.

   d. Press Mode> | Narrow | <Previous to select the narrow ΦM mode to return to the External ΦM Status menu.

   e. Press Edit Sensitivity and set it to 1.00 rad/V.

3. Connect the RF Output of the MG369xC to the spectrum analyzer's RF Input.

4. Set up the spectrum analyzer as follows:

   a. Press the **Mode** key and set to Spectrum Analysis

   b. Press the **Preset** key to reset the instrument.

   c. Press the **FREQUENCY** key and enter 5 GHz.

   d. Press the **SPAN** key and choose Zero Span.

   e. Press the **BW/Avg** key and set the Res BW to 1 kHz and the Video BW to 1 Hz.

   f. Press the **AMPLITUDE** key, then press Scale/DIV and enter 1 dB.

   g. Press the Peak Search key.

5. Set up the Function Generator as follows:

   a. Power cycle the unit to reset the unit.

   b. Press the ∿ key to select the sine wave function.

   c. Press the **Freq** key and use the rotary knob to adjust the frequency output to 98.8 kHz.

   d. Press the **Ampl** key and use the rotary knob to adjust the amplitude to 2.0 Vp-p.

Note	Since a potential spur which could affect accuracy exists at 100 kHz, the measurement is performed with the Function Generator set to 99.8 kHz.

6. Observe the trace on the spectrum analyzer, then press peak search.

It should be just below the top of the screen at about 0 dBm or lower depending on the cable loss.

7. Record the value on the spectrum analyzer as Vmodoff in the test records.

8. On the MG369xC, press On/Off to turn ΦM On.

The level on the spectrum analyzer should fall significantly.

9. Record the value on the spectrum analyzer as Vmodon in the test records.

10. Using Table 3-11 on page 3-51 calculate modulation index to six decimal places.

Save this value as "mod index" which is used in the next step.

11. On the MG369xC, press On/Off to turn ΦM Off.

12. Repeat Step 5b through Step 11 for each of the Function Generator frequency and MG369xC ΦM sensitivity pairs listed in the test record.

13. Calculate the ΦM flatness by comparing each of the Vmodon values from the Vmodon value at the 99.8 kHz rate by calculating the following to three decimal places. Record the results into the test record as ΦMflat.

$$\Phi M_{flat} = 20\log((\text{mod index at 99.8 kHz})/(\text{mod index at X Hz}))$$

Wide ΦM Flatness

1. Connect the equipment as shown in Figure 3-10 on page 3-47.
   a. Connect the MG369xC rear panel 10 MHz REF OUT to the spectrum analyzer's EXT REF IN.
   b. Connect the Function Generator Output to the MG369xC's rear panel FM/ΦM IN connector.
2. Set up the MG369xC as follows:
   a. Reset the instrument by pressing **System**, then Reset.

      After reset, the CW menu is displayed.
   b. Press Edit F1 to open the current frequency parameter for editing and set F1 to 5 GHz.
   c. Press **Modulation** | ΦM | Internal/External to select External ΦM.
   d. Press Mode> | Wide | <Previous to select the wide ΦM mode and return to the External ΦM Status menu.
   e. Press Edit Sensitivity and set it to 1.00 rad/V.
3. Connect the RF Output of the MG369xC to the spectrum analyzer's RF Input.
4. Set up the spectrum analyzer as follows:
   a. Press the **Mode** key and set to Spectrum Analysis
   b. Press the **Preset** key to reset the instrument.
   c. Press the **FREQUENCY** key and enter 5 GHz.
   d. Press the **SPAN** key and choose Zero Span.
   e. Press the **BW/Avg** key and set the Res BW to 1 kHz and the Video BW to 1 Hz.
   f. Press the AMPLITUDE key, then press Scale/DIV and enter 1 dB.
   g. Press the **Peak Search** key.
5. Set up the Function Generator as follows:
   a. Power cycle the unit to reset the unit.
   b. Press the ∿ key to select the sine wave function.
   c. Press the **Freq** key and use the rotary knob to adjust the frequency output to 99.8 kHz.
   d. Press the **Ampl** key and use the rotary knob to adjust the amplitude to 2.0 Vp-p.

Note	Since a potential spur which could affect accuracy exists at 100 kHz, the measurement is performed with the Function Generator set to 99.8 kHz.

6. Observe the trace on the spectrum analyzer.

   It should be just below the top of the screen at about 0 dBm or lower depending on the cable loss.
7. Record the value on the spectrum analyzer as Vmodoff in the test records.
8. On the MG369xC, press On/Off to turn ΦM On.

   The level on the spectrum analyzer should fall significantly.
9. Record the value on the spectrum analyzer as Vmodon in the test records.
10. Using Table 3-11 on page 3-51 calculate modulation index to six decimal places.

    Save this value as "mod index" which is used in the next step.
11. On the MG369xC, press On/Off to turn ΦM Off.
12. Repeat Step 5b through Step 11 for each of the Function Generator frequency and MG369xC ΦM sensitivity pairs listed in the test record.

13. Calculate the ΦM flatness by comparing each of the Vmodon values from the Vmodon value at the 100 kHz rate by calculating the following to three decimal places. Record the results into the test record as ΦMflat.

$$\Phi M_{flat} = 20\log((\text{mod index at 99.8 kHz})/(\text{mod index at X Hz}))$$

Modulation Index Calculations

The modulation index calculation was developed using a Taylor series and Newtons method and is used to find the root of the Bessel function. The calculation is in the table below.

Note	The following table is available as a link from the electronic version of this document as a text file (modulation_index_calculations.txt) or an ExcelExcel file (modulation_index_calculations.xls). These files are also available from the Anritsu Company web site as part of the MG369xC Maintenance Manual download.

Table 3-11. Modulation Index Calculations (1 of 2)

Vmodon = dBm measurement of the CW with Modulation on
Vmodoff = dBm measurement of the CW with Modulation off
Constant_A= 1
RESULT_FINAL = Modulation Index
RESULT_1 = CONSTANT_A-(1-CONSTANT_A^2/4+CONSTANT_A^4/64-CONSTANT_A^6/2304+CONSTANT_A^8/147456-CONSTANT_A^10/14745600-10^((Vmodon-Vmodoff)/20))/(-CONSTANT_A/2+CONSTANT_A^3/16-CONSTANT_A^5/384+CONSTANT_A^7/18432-CONSTANT_A^9/1474560)
RESULT_2 = RESULT_1-(1-RESULT_1^2/4+RESULT_1^4/64-RESULT_1^6/2304+RESULT_1^8/147456-RESULT_1^10/14745600-10^((Vmodon-Vmodoff)/20))/(-RESULT_1/2+RESULT_1^3/16-RESULT_1^5/384+RESULT_1^7/18432-RESULT_1^9/1474560)
RESULT_3 = RESULT_2-(1-RESULT_2^2/4+RESULT_2^4/64-RESULT_2^6/2304+RESULT_2^8/147456-RESULT_2^10/14745600-10^((Vmodon-Vmodoff)/20))/(-RESULT_2/2+RESULT_2^3/16-RESULT_2^5/384+RESULT_2^7/18432-RESULT_2^9/1474560)
RESULT_4 = RESULT_3-(1-RESULT_3^2/4+RESULT_3^4/64-RESULT_3^6/2304+RESULT_3^8/147456-RESULT_3^10/14745600-10^((Vmodon-Vmodoff)/20))/(-RESULT_3/2+RESULT_3^3/16-RESULT_3^5/384+RESULT_3^7/18432-RESULT_3^9/1474560)
RESULT_5 = RESULT_4-(1-RESULT_4^2/4+RESULT_4^4/64-RESULT_4^6/2304+RESULT_4^8/147456-RESULT_4^10/14745600-10^((Vmodon-Vmodoff)/20))/(-RESULT_4/2+RESULT_4^3/16-RESULT_4^5/384+RESULT_4^7/18432-RESULT_4^9/1474560)
RESULT_6 = RESULT_5-(1-RESULT_5^2/4+RESULT_5^4/64-RESULT_5^6/2304+RESULT_5^8/147456-RESULT_5^10/14745600-10^((Vmodon-Vmodoff)/20))/(-RESULT_5/2+RESULT_5^3/16-RESULT_5^5/384+RESULT_5^7/18432-RESULT_5^9/1474560)

Table 3-11. Modulation Index Calculations (2 of 2)

RESULT_7 = RESULT_6-(1-RESULT_6^2/4+RESULT_6^4/64-RESULT_6^6/2304+RESULT_6^8/147456-RESULT_6^10/14745600-10^((Vmodon-Vmodoff)/20))/(-RESULT_6/2+RESULT_6^3/16-RESULT_6^5/384+RESULT_6^7/18432-RESULT_6^9/1474560)
RESULT_8 = RESULT_7-(1-RESULT_7^2/4+RESULT_7^4/64-RESULT_7^6/2304+RESULT_7^8/147456-RESULT_7^10/14745600-10^((Vmodon-Vmodoff)/20))/(-RESULT_7/2+RESULT_7^3/16-RESULT_7^5/384+RESULT_7^7/18432-RESULT_7^9/1474560)
RESULT_9 = RESULT_8-(1-RESULT_8^2/4+RESULT_8^4/64-RESULT_8^6/2304+RESULT_8^8/147456-RESULT_8^10/14745600-10^((Vmodon-Vmodoff)/20))/(-RESULT_8/2+RESULT_8^3/16-RESULT_8^5/384+RESULT_8^7/18432-RESULT_8^9/1474560)
RESULT_10 = RESULT_9-(1-RESULT_9^2/4+RESULT_9^4/64-RESULT_9^6/2304+RESULT_9^8/147456-RESULT_9^10/14745600-10^((Vmodon-Vmodoff)/20))/(-RESULT_9/2+RESULT_9^3/16-RESULT_9^5/384+RESULT_9^7/18432-RESULT_9^9/1474560)
RESULT_11 = RESULT_10-(1-RESULT_10^2/4+RESULT_10^4/64-RESULT_10^6/2304+RESULT_10^8/147456-RESULT_10^10/14745600-10^((Vmodon-Vmodoff)/20))/(-RESULT_10/2+RESULT_10^3/16-RESULT_10^5/384+RESULT_10^7/18432-RESULT_10^9/1474560)
RESULT_12 = RESULT_11-(1-RESULT_11^2/4+RESULT_11^4/64-RESULT_11^6/2304+RESULT_11^8/147456-RESULT_11^10/14745600-10^((Vmodon-Vmodoff)/20))/(-RESULT_11/2+RESULT_11^3/16-RESULT_11^5/384+RESULT_11^7/18432-RESULT_11^9/1474560)
RESULT_13 = RESULT_12-(1-RESULT_12^2/4+RESULT_12^4/64-RESULT_12^6/2304+RESULT_12^8/147456-RESULT_12^10/14745600-10^((Vmodon-Vmodoff)/20))/(-RESULT_12/2+RESULT_12^3/16-RESULT_12^5/384+RESULT_12^7/18432-RESULT_12^9/1474560)
RESULT_FINAL = RESULT_13-(1-RESULT_13^2/4+RESULT_13^4/64-RESULT_13^6/2304+RESULT_13^8/147456-RESULT_13^10/14745600-10^((Vmodon-Vmodoff)/20))/(-RESULT_13/2+RESULT_13^3/16-RESULT_13^5/384+RESULT_13^7/18432-RESULT_13^9/1474560)

Unlocked Narrow FM Accuracy

The unlocked narrow FM accuracy procedure measures the FM accuracy in unlocked narrow FM mode.

Note	For test settings and recording test data for this section, refer to page A-134 in Appendix A, "Test Records (N5531S Test Equipment)".

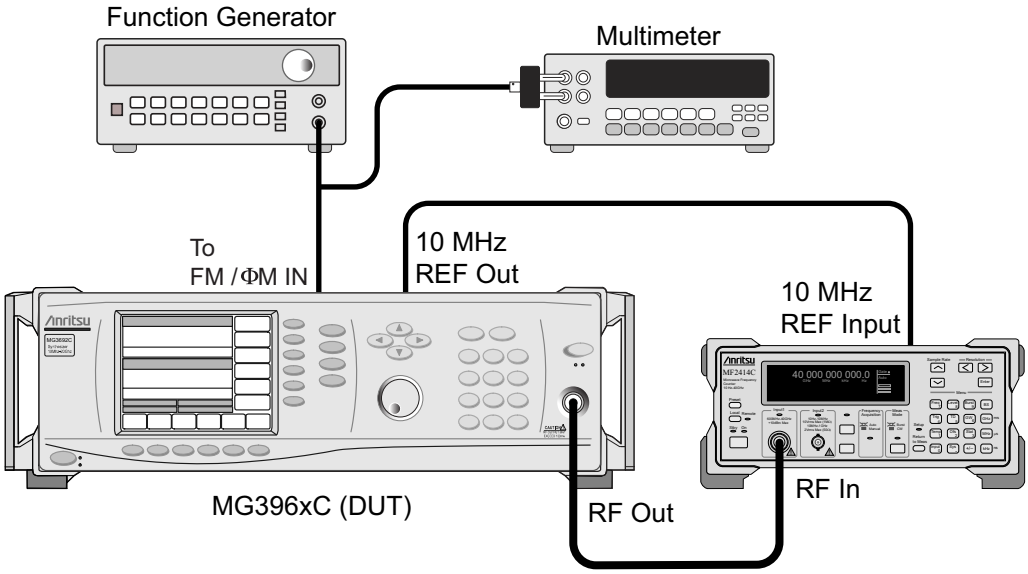

Figure 3-11. Equipment Setup for FM Accuracy Test in Unlocked Narrow Mode

Test Setup

Set up the equipment, shown in Figure 3-11, as follows:

1. Connect the RF Output of the MG369xC to Input 1 of the frequency counter.
2. Connect the 10 MHz REF OUT of the MG369xC to the 10 MHz reference input of the frequency counter.
3. Using a BNC tee, connect the output port of the Function Generator to the input of the multimeter and to the ΦM/FM IN connector of the MG369xC.
4. On the frequency counter, press **Preset**.

Test Procedure

The following procedure lets you verify the external FM accuracy of the MG369xC's RF output.

1. Set up the MG369xC as follows:
   - **a.** Reset the instrument by pressing **SYSTEM**, then Reset. After reset, the CW menu is displayed.
   - **b.** Press Edit F1 to open the current frequency parameter for editing and set F1 to 5.0 GHz.
   - **c.** Press **Modulation** | FM | Internal/External to select external FM.
   - **d.** Set the FM mode to unlocked narrow by pressing Mode> | Unlocked Narrow, then press <Previous to return to the External FM Status menu.
   - **e.** Set the sensitivity to 10 MHz/V by pressing Edit Sensitivity and enter 10 MHz.
   - **f.** Turn the external FM mode on by pressing On/Off.
2. Power cycle the DMM to place it into default state.

3. Set up the Function Generator as follows:
   a. Power cycle the function generator to ensure it is in the default state (1 kHz sine wave, 100 mV peak-to-peak, 50 ohm termination).
   b. Press the **OFFSET** key and hold it down for more than 2 seconds. This action will put the Function Generator into VDC mode.
   c. Rotate the knob to adjust the value until +1 V DC is measured on the multimeter.
4. Disconnect the +1 V DC signal from the MG369xC's FM/ΦM IN connector.
5. Record the frequency counter's displayed frequency to the fourth decimal place (for example, 4.9982 GHz) in the test record as FMref.
6. Reconnect the +1 V DC signal to the MG369xC's FM/ΦM IN connector.
7. Record the frequency counter's displayed frequency to the fourth decimal place (for example, 5.0082 GHz) in the test record as FMmod.
8. Calculate the FM accuracy error (FMerr) and record the result in the test record as follows:

$$FM_{err} = \left[1 - \left(\frac{FM_{mod} - FM_{ref}}{0.010}\right)\right] \times 100$$

3-11 Amplitude Modulation Tests

This procedure verifies the operation of the MG369xC amplitude modulation input sensitivity circuits. The modulated RF output of the MG369xC is measured with an N5531S (Power meter N1912A and PSA E4448A). The actual modulation values are then computed from the modulation analyzer readings. (The absolute AM PK(+) and AM PK(–) readings are used in the given procedures to compensate for non-linearity errors in the test equipment.)

Note	Before performing this procedure ensure that all test equipment is calibrated. Refer to the manufacturer's test equipment manual.

Note	If a message similar to "System needs alignment" appears on the screen of the E4448A, perform a system alignment by pressing **System** | Alignment | Align all now. This will take a few minutes to complete.

Note	For test settings and recording test data for this section, refer to Appendix A, "Test Records (N5531S Test Equipment)" from page A-136 to page A-137

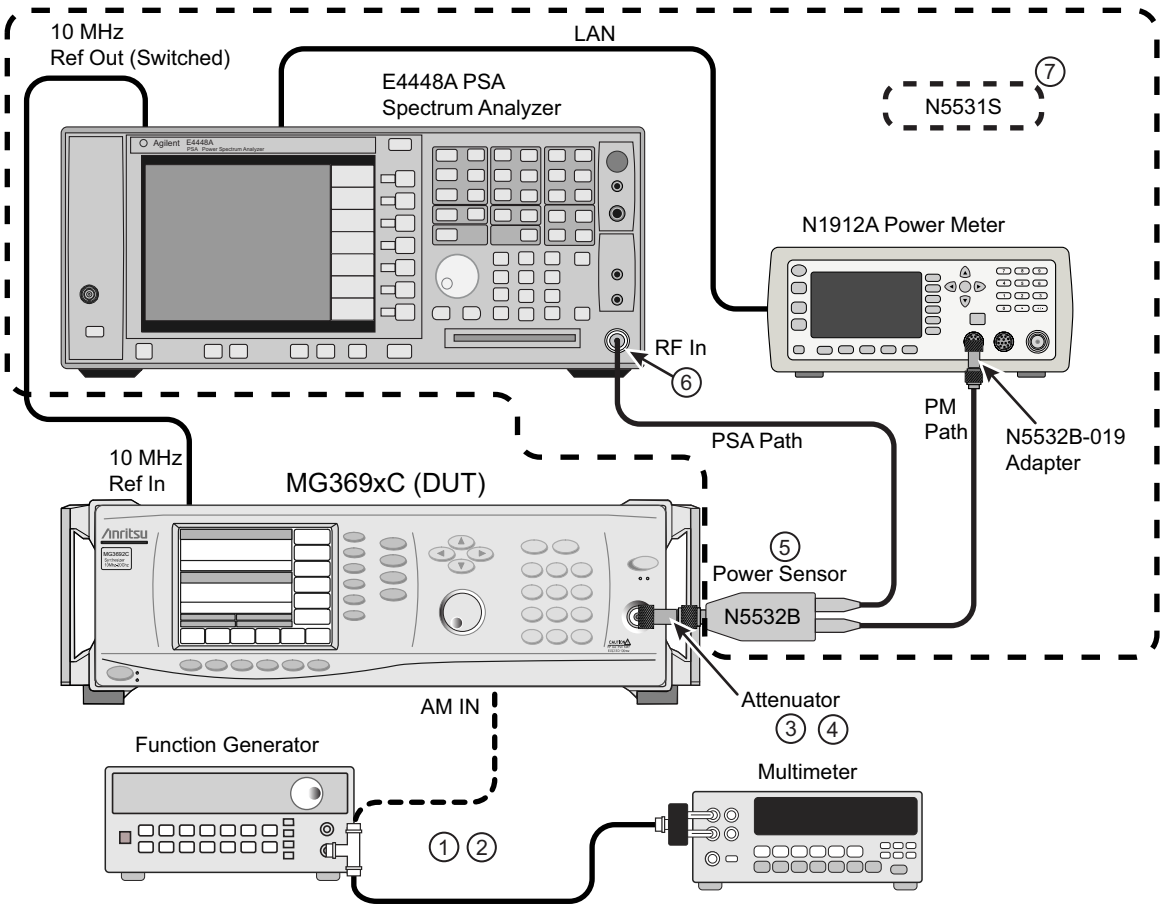

Index	Description
1	Connect the multimeter and function generator as directed by the procedure.
2	Both BNC cables from function generator must be equal length.
3	Attenuator may be required at the DUT output.

Figure 3-12. Equipment Setup for Amplitude Modulation Tests (1 of 2)

4	Depending on the MG369xC output connector, an adapter is required. See the test record for the part number.
5	Connect power sensor as directed in the procedure.
6	Adapter: The adapter changes depending on the power sensor installed. For N5592B option 504 use P/N 1250-3782. For N5592B option 550 use P/N 11900B.
7	Dotted line enclosure represents the Agilent N5531S system.

Figure 3-12. Equipment Setup for Amplitude Modulation Tests (2 of 2)

External AM Accuracy - Test Setup

Equipment Connections and Setups

Connect the equipment shown in Figure 3-12 on page 3-55, as follows:

1. Using a BNC cable, connect the rear panel 10 MHz Reference Out (switched) of the PSA to the MG369xC's 10 MHz REF IN connector.
2. Reset the MG369xC by pressing **SYSTEM** | Reset.
3. After reset, the CW menu is displayed.
4. If the function generator is on, power it off and then on to reset it.
5. Using a BNC tee, connect the function generator output to the AM IN connector of the MG369xC and to the multimeter input, via a BNC to banana adapter.

N5531S Preliminary Setup

Set up the N5531S Measuring Receiver (PSA and P-Series power meter) as follows:

1. With the LAN cable connected, turn on the PSA and power meter.
2. On the PSA press **Mode** and choose Measuring Receiver then **Preset** both the PSA and power meter.
3. Verify the "Frequency Reference" on the PSA:
   a. Press **System** | Reference
   b. Press **Freq Ref** and make sure Int is underlined.
   c. Press 10 MHz Out and make sure On is underlined.
   d. Verify that the MG369xC displays Ext Ref to ensure that the MG369xC is phase-locked to the PSA.
4. Establish the LAN communication between the PSA and P-Series Power Meter.

   Connections between the Power Meter and PSA can be done via a network or by using a Crossover Cable (Agilent part number 8121-0545 or Anritsu part number 3-806-152). Below are the steps for a Cross-over Cable Communication Setup.

Power Meter LAN Communication Setup

1. Press **System** | Remote Interfaces | Network Manual.
2. With the first IP address box highlighted:
   a. Press **Select** | 192 | Enter
   b. Press [▸] to highlight the second IP address box, press **Select** | 168 | Enter.
   c. Press [▸] to highlight the third IP address box, press **Select** | 100 | Enter.
   d. Press [▸] to highlight the last IP address box, press **Select** | 2 | Enter.

      In this way, the IP address of the power meter is set up as "192.168.100.2".

      Similarly, one can set up the "Subnet mask" of the power meter as "255.255.255.0".
   e. Press **System** | Remote Interfaces | Restart Network to enable the new settings.

PSA LAN Communication Setup

1. To set the PSA IP address as “192.168.100.1”, press:

   System | Config I/O | IP Address | 192.168.100.1 | Enter

2. To set the PSA Subnet mask as “255.255.255.0”, press:

   Subnet mask | 255.255.255.0 | Enter

3. Press **Mode** | Measuring Receiver, then press **System** | More 1 of 3 | More 2 of 3 | Power Meter | Power Meter Config | Power Meter IP Address | 192.168.100.2 | Enter

4. Press Verify Power Meter Connection

5. Press Show Setup to verify the power meter information.

Load N5532B Power Sensor Module Cal Factors

1. On the PSA, press MODE | Measuring Receiver | File | Load | Type | More 1 of 2 | Calibration Factor

2. Insert the 3" floppy disk of the N5532B Sensor Module Data Disk into the PSA’s floppy drive and press Dir Up | ↑ | Dir Select to ensure the “A” drive is selected.

3. Using the up/down arrow keys highlight CFDATA.XML and press Load Now to load the cal factor file to the PSA.

Power Meter and PSA Calibration

1. To Calibrate the PSA, press:

   System | Alignments | Align All Now

   Wait until its completion.

2. To calibrate the power meter:

   a. Connect the RF input connector of the sensor module N5532B to the power meter’s Ref connector

   b. On the PSA press:

   System | More 1 of 3 | More 2 of 3 | Power Meter | Zero & Cal Power Meter

   Wait until its completion.

   c. Or alternatively, on the Power Meter press:

   Cal | Zero+Cal

   Wait until its completion.

External AM Accuracy - Measurement

The following procedure provides steps to measure the absolute peak external AM values (for a 50 % AM signal at 6 dB below maximum rated output power) and calculate the modulation index.

1. Setup the MG369xC as follows:

   a. Press Frequency, and then press Edit F1 to open the current frequency parameter for editing.

   b. Set F1 to the first/next applicable DUT frequency listed in the test record (on page A-135).

   c. Determine what the power level will be set to:

   The power level (L1) is set to 6 dB below the maximum rated leveled power for the full band (lowest of the maximum rated power levels) for the instrument being tested (refer to Appendix C, Technical Data Sheet).

d. Connect an attenuation PAD to the DUT RF output for the following power conditions:

- If L1 is < 0 dBm, install a 6 dB attenuation PAD.
- If L1 is less than 0 dBm and is less than or equal to 3 dBm, install a 10 dB attenuation PAD.
- If L1 is greater than 3 dBm, install a 20 dB attenuation PAD.

e. Press **Level** | Edit L1 to open the current level parameter for editing.

f. Set L1 to 6 dB below the maximum rated leveled power for the full band (lowest of the maximum rated power levels) for the instrument being tested (refer to Appendix C, Technical Data Sheet). This was determined in a previous step.

g. Select external AM:

Modulation | AM | Internal/External

Set On/Off to On.

h. Press Edit Sensitivity and set the AM sensitivity to 50%/V.

2. Connect the power sensor to the attenuator at the RF output of the MG369xC.

Caution	To avoid connector damage, the power sensor needs physical support when connected to the DUT.

3. Set the multimeter to measure an AC signal by pressing **AC V**.

4. Set up the Function Generator as follows:

a. Press the ∿ (sine wave) key, then the Freq key and adjust the frequency to 1 kHz using the rotary knob.

b. Press the Ampl key and adjust the voltage to 0.7071 V using the rotary knob (read the voltage on the multimeter).

5. Set up the N5531S (PSA and P-Series power meter) as follows:

a. On the PSA press Mode, select Measuring Receiver | Measure | AM Depth.

b. On the PSA, press Frequency Channel and enter the carrier frequency (see test records).

c. On the PSA, press Meas Setup | More | AM Depth Only to Yes.

d. On the PSA, press Det/Demod | High Pass Filter | 300 Hz.

e. On the PSA, press Det/Demod | Low Pass Filter | 15 kHz.

f. On the PSA, press Det/Demod | Detector | PEAK HOLD to On.

g. On the PSA, press Det/Demod | Detector | Peak +.

h. Wait to obtain a positive peak AM Depth %, which will be used as Pk1. and enter it into the test record (on page A-135).

i. On the PSA, Press Detector | Peak -.

j. Wait to obtain a negative peak AM Depth %, which will be used as Pk2 and enter it into the test record (on page A-135).

6. Calculate the modulation index (M) from the above values as follows:

$$M = \frac{(Pk1 + Pk2)}{(200 + Pk1 - Pk2)} \times 100$$

7. Record the calculated result as M in the test record.

8. Repeat the measurement (Step 1 through Step 7) for the remaining MG369xC CW and LO frequencies listed in the test record.

Internal AM Accuracy - Test Setup

The following procedure provides steps (only for instruments with internal AM) to measure the absolute peak internal AM values (for a 50% AM signal at 6 dB below maximum rated output power) and calculate the modulation index.

Equipment Connections and Setups

1. Connect the equipment (without the power sensor) shown in Figure 3-12 on page 3-55 as follows:
   a. Using a BNC cable, connect the rear panel 10 MHz Reference Out (switched) of the PSA to the MG369xC's 10 MHz REF IN connector.
   b. Reset the MG369xC by pressing SYSTEM | Reset.

      After reset, the CW menu is displayed.

N5531S Preliminary Setup

1. With the LAN cable connected, turn on the PSA and power meter.
2. On the PSA press **Mode** and choose Measuring Receiver then preset both the PSA and power meter.
3. Verify the "Frequency reference":
4. Press System | Reference | 10 MHz Out and make sure On is underlined.
5. Press **Freq Ref** and make sure Int is underlined.
6. Verify that the MG369xC displays Ext Ref to ensure that the MG369xC is phase-locked to the PSA.
7. Establish the LAN communication between PSA and P-Series power meter (An example for using a cross-over LAN (Anritsu part number 3-806-152)

Power Meter LAN Communication Setup

1. Press System | Remote Interface | Network Manual
2. With the first IP address box highlighted:
   a. Press Select | 192 | Enter
   b. Press [▸] to highlight the second IP address box, press **Select** | 168 | Enter.
   c. Press [▸] to highlight the third IP address box, press **Select** | 100 | Enter.
   d. Press [▸] to highlight the last IP address box, press **Select** | 2 | Enter.

      In this way, the IP address of the power meter is set up as "192.168.100.2".

      Similarly, one can set up the "Subnet mask" of the power meter as "255.255.255.0".
   e. Press **System** | Remote Interfaces | Restart Network to enable the new settings.

PSA LAN Communication Setup

1. To set the PSA IP address as "192.168.100.1", press:

   System | Config I/O | IP Address | 192.168.100.1 | Enter
2. To set the PSA Subnet mask as "255.255.255.0", press:

   Subnet mask | 255.255.255.0 | Enter
3. Press **Mode** | Measuring Receiver, then press **System** | More 1 of 3 | More 2 of 3 | Power Meter | Power Meter Config | Power Meter IP Address | 192.168.100.2 | Enter
4. Press Verify Power Meter Connection
5. Press Show Setup to verify the power meter information.

Load N5532B Power Sensor Module Cal Factors

1. On the PSA, press MODE | Measuring Receiver | File | Load | Type | More 1 of 2 | Calibration Factor
2. Insert the 3" floppy disk of the N5532B Sensor Module Data Disk into the PSA's floppy drive and press Dir Up | ↑ | Dir Select to ensure the "A" drive is selected.
3. Using the up/down arrow keys highlight CFDATA.XML and press Load Now to load the cal factor file to the PSA.

Power Meter and PSA Calibration

1. To Calibrate the PSA, press:

   System | Alignments | Align All Now

   Wait until its completion.
2. To calibrate the power meter:
   a. Connect the RF input connector of the sensor module N5532B to the power meter's Ref connector
   b. On the PSA press:

      System | More 1 of 3 | More 2 of 3 | Power Meter | Zero & Cal Power Meter

      Wait until its completion.
   c. Or alternatively, on the Power Meter press:

      Cal | Zero+Cal

      Wait until its completion.

Internal AM Accuracy - Measurement

1. Setup the MG369xC as follows:
   a. Press Frequency, and then press Edit F1 to open the current frequency parameter for editing.
   b. Set F1 to the first/next applicable DUT frequency listed in the test record (on page A-136).
   c. Determine what the power level will be set to:

      The power level (L1) is set to 6 dB below the maximum rated leveled power for the full band (lowest of the maximum rated power levels) for the instrument being tested (refer to Appendix C, Technical Data Sheet).
   d. Connect an attenuator to the DUT RF output for the following power conditions:
      - If L1 is < 0 dBm, install a 6 dB attenuation PAD.
      - If L1 is less than 0 dBm and is less than or equal to 3 dBm, install a 10 dB attenuation PAD.
      - If L1 is greater than 3 dBm, install a 20 dB attenuation PAD.
   e. Press **Level** | Edit L1 to open the current level parameter for editing.
   f. Set L1 to 6 dB below the maximum rated leveled power for the full band (lowest of the maximum rated power levels) for the instrument being tested (refer to Appendix C, Technical Data Sheet). This was determined in a previous step.
   g. Select internal AM:

      Modulation | AM | Internal /External
   h. Select Internal and set On/Off to On.
   i. Press Edit | Depth and set the AM Depth to 50 %.
   j. Press Edit | Rate and set the AM Rate to 1 kHz.

2. Connect the power sensor to the attenuator on the RF output of the MG369xC.

Caution	The power sensor needs support when connected to the DUT.

3. If connected, disconnect the Function Generator and DMM from the MG369xC's AM IN connector.
4. Set up the N5531S (PSA and P-Series power meter) as follows:
   a. On the PSA press Mode, select Measuring Receiver | Measure | AM Depth.
   b. On the PSA, press Frequency Channel and enter the carrier frequency (see test records).
   c. On the PSA, press Meas Setup | More | AM Depth Only to yes
   d. On the PSA, press Det/Demod | High Pass Filter | 300 Hz
   e. On the PSA, press Det/Demod | Low Pass Filter | 15 kHz
   f. On the PSA, press Det/Demod | Detector | PEAK HOLD to On
   g. On the PSA, press Det/Demod | press Detector, Peak +
   h. Wait to obtain a positive peak AM Depth %, which will be used as Pk1. Enter it into the test record (on page A-136).
   i. On the PSA, Press Detector | Peak –
   j. Wait to obtain a negative peak AM Depth %, which will be used as Pk2 and enter it into the test record.
5. Calculate the modulation index (M) from the above values as follows:

$$M = \frac{(Pk1 + Pk2)}{(200 + Pk1 - Pk2)} \times 100$$

6. Record the calculated result as M in the test record.
7. Repeat the measurement (Step 1 through Step 6) for the remaining MG369xC CW and LO frequencies listed in the test record.

External AM Flatness - Test Setup

The following procedure provides steps to measure the AM flatness of the external AM signal at 6 dB below maximum rated output power from 50 Hz to 10 kHz rates.

Equipment Connections and Setups

1. Using a BNC cable, connect the rear panel 10 MHz reference out (switched) of the PSA to the MG369xC's 10 MHz REF IN connector. See Figure 3-12 on page 3-55.
2. Reset the MG369xC by pressing **System**, then Reset. After reset, the CW menu is displayed.
3. Power cycle the Function Generator to reset the unit, then using a BNC tee, connect the Function Generator output to the AM IN connector of the MG369xC and to the multimeter input, via a BNC to banana adapter.

N5531S Preliminary Setup:

1. With the LAN cable connected, turn the power on.
2. Verify the "Frequency reference":
3. Press System | Reference | 10 MHz Out and make sure On is underlined.
4. Press **Freq Ref** and make sure Int is underlined.

5. Verify that the MG369xC displays Ext Ref to ensure that the MG369xC is phase-locked to the PSA.
6. Establish the LAN communication between PSA and P-Series power meter (An example for using a cross-over LAN (Anritsu part number 3-806-152)

Power Meter LAN Communication Setup

1. Press System | Remote Interface | Network Manual
2. With the first IP address box highlighted:
   a. Press Select | 192 | Enter
   b. Press [▸] to highlight the second IP address box, press **Select** | 168 | Enter.
   c. Press [▸] to highlight the third IP address box, press **Select** | 100 | Enter.
   d. Press [▸] to highlight the last IP address box, press **Select** | 2 | Enter.

      In this way, the IP address of the power meter is set up as “192.168.100.2”.

      Similarly, one can set up the “Subnet mask” of the power meter as “255.255.255.0”.
   e. Press **System** | Remote Interfaces | Restart Network to enable the new settings.

PSA LAN Communication Setup

1. To set the PSA IP address as “192.168.100.1”, press:

   System | Config I/O | IP Address | 192.168.100.1 | Enter
2. To set the PSA Subnet mask as “255.255.255.0”, press:

   Subnet mask | 255.255.255.0 | Enter
3. Press **Mode** | Measuring Receiver, then press **System** | More 1 of 3 | More 2 of 3 | Power Meter | Power Meter Config | Power Meter IP Address | 192.168.100.2 | Enter
4. Press Verify Power Meter Connection
5. Press Show Setup to verify the power meter information.

Load N5532B Power Sensor Module Cal Factors

1. On the PSA, press MODE | Measuring Receiver | File | Load | Type | More 1 of 2 | Calibration Factor
2. Insert the 3" floppy disk of the N5532B Sensor Module Data Disk into the PSA’s floppy drive and press Dir Up | ↑ | Dir Select to ensure the “A” drive is selected.
3. Using the up/down arrow keys, highlight CFDATA.XML and press Load Now to load the cal factor file to the PSA.

Power Meter and PSA Calibration

1. To Calibrate the PSA, press:

   System | Alignments | Align All Now

   Wait until its completion.
2. To calibrate the power meter:
   a. Connect the RF input connector of the sensor module N5532B to the power meter’s Ref connector
   b. On the PSA press:

      System | More 1 of 3 | More 2 of 3 | Power Meter | Zero & Cal Power Meter

      Wait until its completion.
   c. Or alternatively, on the Power Meter press:

      Cal | Zero+Cal

Wait until its completion.

Additional N5531S (PSA and P-Series Power Meter) Setup

1. On the PSA press Mode, select Measuring Receiver | Measure | AM Depth.
2. On the PSA, press Frequency Channel and enter the carrier frequency (see test records).
3. On the PSA, press Meas Setup | More | AM Depth Only to Yes.
4. On the PSA, press Det/demod | High Pass Filter | None
5. On the PSA, press Det/demod | Low Pass Filter | None
6. On the PSA, press Restart

External AM Flatness - Measurement

1. Setup the MG369xC as follows:
   - **a.** Reset the instrument by pressing **SYSTEM**, then Reset. After reset, the CW menu is displayed.
   - **b.** Press Frequency, and then press Edit F1 to open the current frequency parameter for editing.
   - **c.** Set F1 to the first/next applicable DUT frequency listed in the test record (on page A-137).
   - **d.** Determine what the power level will be set to:

     The power level (L1) is set to 6 dB below the maximum rated leveled power for the full band (lowest of the maximum rated power levels) for the instrument being tested (refer to Appendix C, Technical Data Sheet).
   - **e.** Connect an attenuator to the DUT RF output for the following power conditions:
     - If L1 is < 0 dBm, install a 6 dB attenuation PAD.
     - If L1 is less than 0 dBm and is less than or equal to 3 dBm, install a 10 dB attenuation PAD.
     - If L1 is greater than 3 dBm, install a 20 dB attenuation PAD.
   - **f.** Press **Level** | Edit L1 to open the current level parameter for editing.
   - **g.** Set L1 to 6 dB below the maximum rated leveled power for the full band (lowest of the maximum rated power levels) for the instrument being tested (refer to Appendix C, Technical Data Sheet). This was determined in a previous step.
   - **h.** Select external AM:

     Modulation | AM | Internal /External
   - **i.** Select External and set On/Off to On.
   - **j.** Press Edit Sensitivity and set the AM sensitivity to 50%/V.
2. Connect the power sensor to the attenuator at the RF output of the MG369xC.

Caution	The power sensor needs support when connected to the DUT.

3. Set the multimeter to measure an AC signal by pressing **AC V**.
4. Set up the Function Generator as follows:
   - **a.** Press the ∿ (sine wave) key, then the Freq key and adjust the frequency to 50 Hz or next frequency using the rotary knob.
   - **b.** Press the Ampl key and adjust the voltage to 0.7071 V using the rotary knob (read the voltage on the multimeter).
5. On the PSA, press Restart, then record the measured Depth value from the N5531S to the test record (on page A-137).

6. Repeat Step 4through Step 6 for each of the following Function Generator frequencies and record the results in the respective column in the test record (Table):

M1 = 1 kHz

M2 = 2 kHz

M3 = 3 kHz

M4 = 4 kHz

M5 = 5 kHz

M6 = 6 kHz

M7 = 7 kHz

M8 = 8 kHz

M9 = 9 kHz

M10 = 10 kHz

7. Find the maximum (Mmax) and minimum (Mmin) depth values for Mx and calculate the AM flatness (AMflat) using the following equation:

$$AM_{flat} = 20 \times \log(M_{max} / M_{min})$$

8. Set the frequency on the DUT and PSA to the next frequency listed in the test records.

a. On the DUT, press Frequency, and then press Edit F1 to open the current frequency parameter for editing.

b. Set F1 to the first/next applicable DUT frequency listed in the test record.

c. On the PSA press **Frequency** and enter the next frequency listed on the test record.

9. Repeat Step 4 through Step 8 for each of the MG369xC frequencies listed in the test record.

3-12 Pulse Modulation Tests

The pulse modulation tests verify the operation of the pulse modulation circuits in the MG369xC. Rise time, fall time, overshoot, and power accuracy of the pulsed RF output are verified using a high speed digital sampling oscilloscope. Pulse depth (on/off ratio) is measured using a spectrum analyzer.

Note	For test settings and recording test data for this section, refer to Appendix A, "Test Records (N5531S Test Equipment)" from page A-138 to page A-140

Note	Before performing this procedure ensure that all test equipment is calibrated. Refer to the manufacturer's test equipment manual.

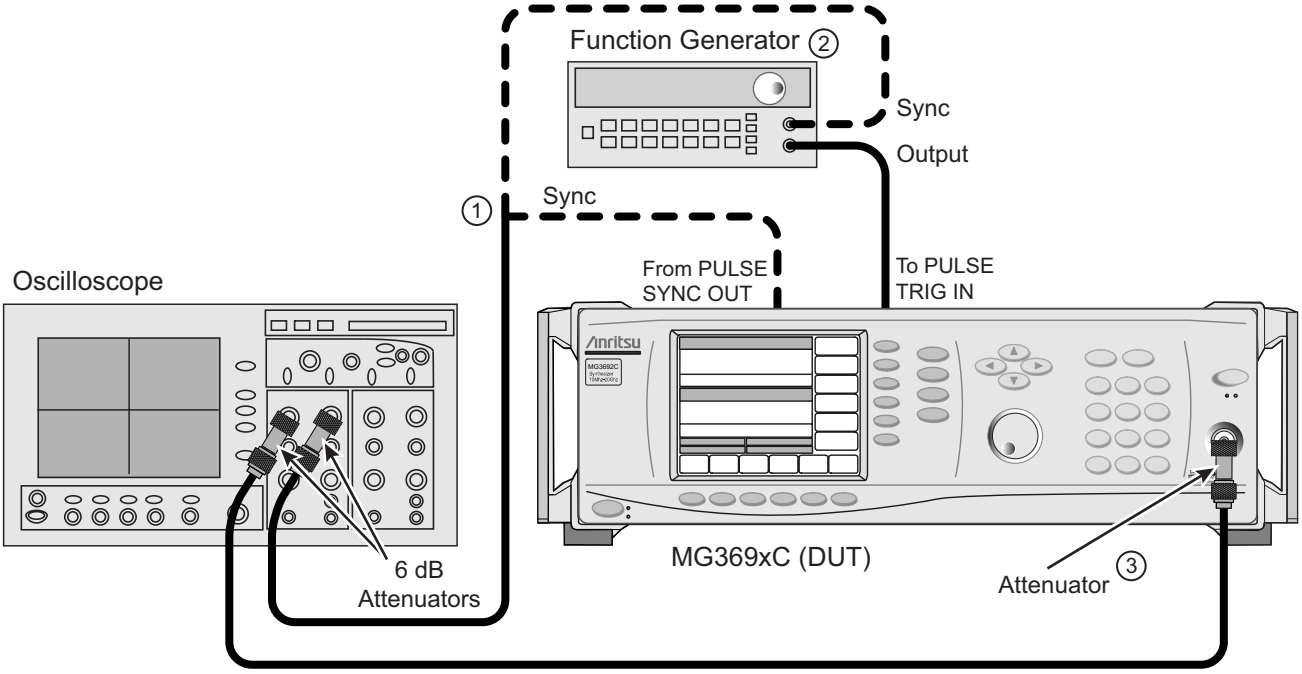

Index	Description
1	Connect the PULSE SYNC OUT from the MG369xC or the SYNC from the function generator as appropriate.
2	The function generator is required only if the MG369xC does not have Option 24 or Option 27.
3	Connect the attenuator as specified in the procedure.

Figure 3-13. Equipment Setup for the Pulse Modulation Tests

Test Setup

Connect the equipment shown in Figure 3-13, as follows:

1. Using the 2.4 mm (f) to K (f) adapters, connect a 6 dB fixed attenuator to the oscilloscope's Channel 1 and Trigger inputs.
2. Connect a RF coaxial cable to the 6 dB attenuator at the oscilloscope's Channel 1 input.
3. For models without internal pulse, use a BNC to SMA adapter to connect a 50Ω BNC cable from the Function Generator's SYNC to the 6 dB attenuator at the oscilloscope's Trigger input.
4. For models with internal pulse, use a BNC to SMA adapter to connect a 50Ω BNC cable from the MG369xC's PULSE SYNC OUT to the 6 dB attenuator at the oscilloscope's Trigger input.

5. For models without internal pulse, connect a 50Ω BNC cable from the Function Generator's signal output to the MG369xC's rear panel PULSE TRIG IN connector.
6. Set up the oscilloscope as follows:
   - **a.** Press the **Default Setup** key.
   - **b.** From the title bar, select:

     Measure | Math | Function 1 and set to On
   - **c.** Set the operator to MAX and turn on the Function 1 display.
   - **d.** Select Close to close the open window.
   - **e.** Select the **Trigger Level** button on the bottom of the display.
   - **f.** Set the trigger level to 500 mV.
   - **g.** Set the bandwidth to DC to 2.5 GHz.
   - **h.** Select rising edge ( ) triggering.
   - **i.** Select the left module as the source.
   - **j.** Select Close to close the open window.
   - **k.** Turn off channel 1 on the oscilloscope by pressing the 1 key (LED off) above the module.
7. For models without internal pulse, set up the Function Generator as follows:
   - **a.** Turn the Function Generator off, then back on to reset the instrument.
   - **b.** Press the key to select the square wave function.
   - **c.** Press the **Freq** key, then the green **Enter Number** key and enter 250 kHz.
   - **d.** Press the blue **Shift** key, then the %Duty Cycle key and use the rotary knob to adjust the duty cycle to 25%.
   - **e.** Press the **Ampl** key, then the green **Enter Number** key and enter 2.2 $V_{p\text{-}p}$.
   - **f.** Press the Offset key, then the green **Enter Number** key and enter 1.1 VDC.

Pulse Rise Time, Fall Time and Overshoot Measurement

The following procedure lets you measure the rise time, fall time, and overshoot of the MG369xC's pulse modulated RF output.

Repeat the measurements of the pulse rise time, pulse fall time, and pulse overshoot based on the DUT frequencies in test records.

Pulse Rise Time

1. Set up the MG369xC as follows:
   - **a.** Reset the instrument by pressing **SYSTEM**, then Reset. After reset, the CW menu is displayed.
   - **b.** Turn RF output off.
   - **c.** Press Edit F1 to open the current frequency parameter for editing.
   - **d.** Press the **Frequency** button and set F1 to the first/next applicable frequency in the test record.
   - **e.** Press **Level** to open the current power level parameter for editing.
   - **f.** Set L1 to the maximum specified leveled output power level for the frequency and instrument being tested (refer to Appendix B, Technical Data Sheet).

g. Connect a fixed attenuator with the proper attenuation value (refer to Table 3-12) to the MG369xC RF Output, then connect the RF coaxial cable from the Channel 1 input of the oscilloscope to the fixed attenuator.

Table 3-12. MG369xC Attenuation

MG369xC Rated Power	Required Attenuation
≥18 dBm	20 dB
≥13 dBm	10 dB
≥10 dBm	6 dB
≥8 dBm	3 dB
<8 dBm	0 dB

h. Turn RF output ON.

i. Determine if internal pulse is installed. If installed, perform Step j. If not installed, skip to Step k.

j. For models ***without*** internal pulse:

(1) Press **Modulation** | Pulse | Internal/External to select the External Pulse Status menu.

(2) Ensure that the polarity is set to High RF On.

(3) Press On/Off to turn the external pulse on.

k. For models ***with*** internal pulse:

(1) Press **Modulation** | Pulse | Internal/External to select the Internal Pulse Status menu.

(2) Press Edit Period and enter 4 µs.

(3) Press Wdth/Dly List... | Edit Selected and enter 1 µs.

(4) Press Previous, then On/Off to turn the internal pulse mode on.

2. Set up the oscilloscope as follows:

a. Select the **Time/Delay** button on the bottom of the display.

b. Set the sweep time to 10 ns/div and the delay to 4 µs. Select Close to close the window.

c. Press the **Clear Display** key. Allow the oscilloscope to sample the signal and wait for a clearly defined waveform to appear on the display.

d. Select the **Scale** button at the lower left corner of the display.

e. Adjust the scale and offset voltages so that the positive peak of the pulse is centered and the amplitude is optimally displayed. Select Close to close the window.

f. Select the **Rise Time** button (on the left hand side of the display).

3. Read the measured result from the bottom of the display and enter the result in the test record.

Pulse Fall Time

4. Set up the oscilloscope as follows:

a. Select the **Time/Delay** button on the bottom of the display.

b. Set the delay time to 5 µs. Select Close to close the window.

c. Press the **Clear Display** key. Allow the oscilloscope to sample the signal and wait for a clearly defined waveform to appear on the display.

d. Adjust the scale and offset voltages so that the positive peak of the pulse is centered and the amplitude is optimally displayed. Select Close to close the window.

e. Select the **Fall Time** button (on the left hand side of the display).

5. Read the measured result from the bottom of the display and enter the result in the test record.

Overshoot

6. Set up the oscilloscope as follows:
   a. Select the **Time/Delay** button on the bottom of the display.
   b. Set the sweep time to 120 ns/div and the delay to 4 µs. Select Close to close the window.
   c. Press the **Clear Display** key. Allow the oscilloscope to sample the signal and wait for a clearly defined waveform to appear on the display.
   d. Select the **Amplitude** button, then the **Overshoot** button (on the left hand side of the display).
7. Read the measured result from the bottom of the display and enter the result in the test record.
8. Repeat steps Step 1b through 7 for each frequency listed in the test record.

Pulse Power Accuracy Measurement

The following procedure lets you measure the pulse power accuracy of the MG369xC's pulse modulated RF Output. The accuracy is tested with a 1 µs and a 0.5 µs pulse width.

1. Disconnect the MG369xC's RF coaxial cable from the front of the unit. Set up the equipment as described in Figure 3-13. Perform steps 1 to 6 in "Test Setup" on page 3-65.
2. For models without internal pulse, set up the Function Generator as follows:
   a. Turn the Function Generator off, then back on to reset the instrument.
   b. Press the ⊓⊔ key to select the square wave function.
   c. Press the **Freq** key, then the green **Enter Number** key and enter 250 kHz.
   d. Press the blue **Shift** key, then the **%Duty Cycle** key and use the rotary knob to adjust the duty cycle to 25%.
   e. Press the **Ampl** key, then the green **Enter Number** key and enter 2.2 $V_{p\text{-}p}$.
   f. Press the **Offset** key, then the green **Enter Number** key and enter 1.1 VDC.
3. Set up the MG369xC as follows:
   a. Reset the instrument by pressing **SYSTEM**, then Reset. After reset, the CW menu is displayed.
   b. Turn RF output OFF.
   c. Press Edit F1 to open the current frequency parameter for editing.
   d. Set F1 to the first/next applicable frequency in the test record.
   e. Press **Level** to open the current power level parameter for editing.
   f. Set L1 to the maximum specified leveled output power level for the instrument being tested (refer to Appendix B, Technical Data Sheet).
   g. Connect a fixed attenuator with the proper attenuation value (refer to Table 3-13) to the MG369xC RF Output and then connect the RF coaxial cable from the Channel 1 Input of the Oscilloscope to the fixed attenuator.

Table 3-13. MG369xC Attenuation

MG369xC Rated Power	Required Attenuation
≥18 dBm	20 dB
≥13 dBm	10 dB
≥10 dBm	6 dB
≥8 dBm	3 dB
<8 dBm	0 dB

h. Turn RF output ON.

i. For models ***without*** internal pulse:

Press **Modulation** | Pulse | Internal/External to select the External Pulse Status menu.

Ensure that the polarity is set to High RF Off.

Press On/Off to turn the external pulse on.

j. For models ***with*** internal pulse:

Press **Modulation** | Pulse | Internal/External to select the Internal Pulse Status menu.

Press Edit Period and enter 4 µs.

Press Wdth/Dly List... | Edit Selected and enter 1 µs (or 0.5 µs).

Press Previous, then On/Off to turn the internal pulse mode off.

4. Set up the oscilloscope as follows:

a. Press the **Source** button (near the trigger) until Free Run is illuminated.

b. Select the **Scale 1** button at the lower left corner of the display and set the scale to 20 mV/div.

c. Set the Offset so that the trace is centered on the display, and select Close.

d. Select the Amplitude button and then the Vavg button (on the left hand side of the display), touch OK to close.

Note	Use the scroll bar to locate the Vavg button.

5. Read the measured result on the display and record the result as V_{ref} in the test record.

6. On the MG369xC, press On/Off to turn pulse modulation on.

7. Set up the oscilloscope as follows:

a. Press the **Source** button (near the trigger) until Left Module is illuminated.

b. Press the Clear display key. Allow the oscilloscope to sample the signal and wait for a clearly defined waveform to appear on the display.

c. Select Time Delay and Scale and adjust them so that only the positive peak portion of the pulse fills the display.

For example, set the scale to 90 ns/div and the delay time to 4.075 µs for a 1 µs pulse or set the scale to 45 µs/div and the delay time to 4.075 µs for a 500 µs pulse.

Press Close to close the window.

d. Select the Vavg button and read the measured result on the display.

8. Record the result as V_{pulse} in the test record.

9. Calculate the difference of the two voltages using the following equation, then record the result in the test record as $P_{accuracy}$.

$$P_{accuracy} = 20 \times \log\left(\frac{V_{pulse}}{V_{ref}}\right)$$

10. Repeat Step 3b to Step 9 for each frequency listed in the test record.

11. For models without internal pulse, repeat Step 3b to Step 9 using a Function Generator square wave frequency input of 500 kHz with a 25% duty cycle.

12. For models with internal pulse, repeat Step 3b to Step 9 using a pulse width of 0.5 µs.

Pulse On/Off Ratio

Note	For test settings and recording test data for this section, refer to Appendix A, “Test Records (N5531S Test Equipment)” on page A-140.

Note	If a message similar to “System needs alignment” appears on the screen of the E4448A, perform a system alignment by pressing **System** | Alignment | Align all now. This will take a few minutes to complete.

The following procedure measures the pulse on/off ratio of the MG369xC’s pulse modulated RF output.

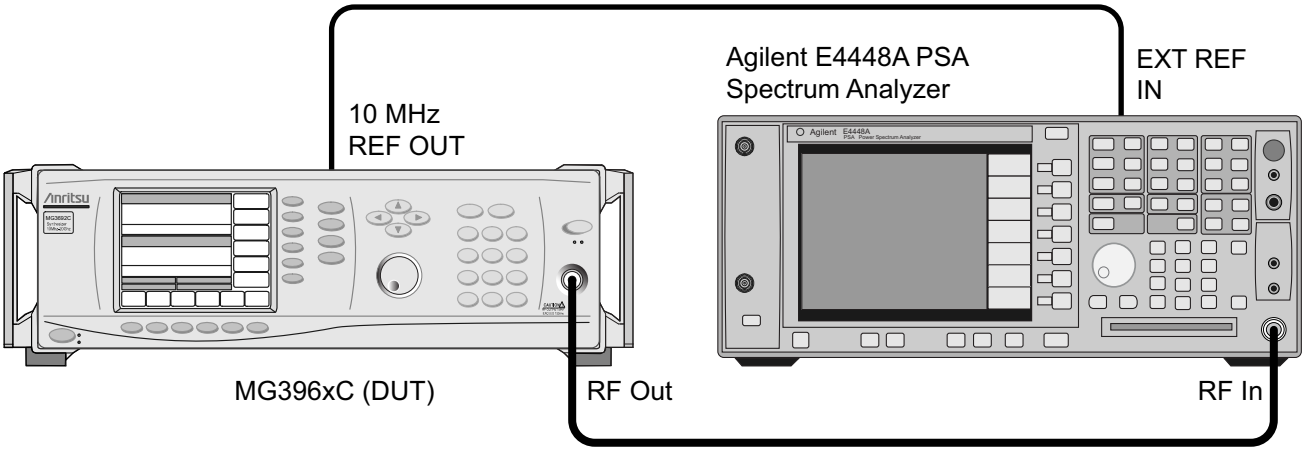

Figure 3-14. Equipment Setup for Pulse On/Off Ratio Tests

Test Setup

Set up the equipment shown in Figure 3-14, as follows:

1. Connect the MG369xC’s rear panel 10 MHz REF OUT to the E4448A EXT REF IN.

Test Procedure

Measure the pulse on/off ratio as follows:

1. Set up the MG369xC as follows:
   - **a.** Reset the MG369xC by pressing **SYSTEM**, then Reset.

     After reset, the CW menu is displayed.
   - **b.** Press Edit F1 to open the current frequency parameter for editing.
   - **c.** Set F1 to the first/next applicable frequency in the test record for the model being tested.
   - **d.** Press **Level** to open the current power level parameter for editing and set L1 to the maximum specified leveled output power level.
   - **e.** Press **Modulation**, then Pulse to select the External Pulse Status menu.
   - **f.** Press Low RF On and ensure that the pulse mode is turned off.
2. Connect the MG369xC RF Output to the spectrum analyzer’s RF Input.
3. Set up the spectrum analyzer as follows:
   - **a.** Press the **MODE** key and set to Spectrum Analysis
   - **b.** Press the **Preset** key to reset the instrument.

c. Press the **System** key.

d. Press the Reference soft key.

e. Press Freq Ref 10 MHz soft key and set to EXT.

f. Press the **FREQUENCY** key and enter the current frequency setting of the MG369xC.

g. Press the **SPAN** key and enter 1 kHz.

h. Press the **BW/Avg** key and set the Res BW to 1 Hz and the Video BW to 1 Hz

i. Press the **AMPLITUDE** key and enter the current power level setting of the MG369xC.

j. Press Scale/Div and then enter 15 dB.

k. Press the **Peak Search** key.

l. Press the **Marker** key, then select DELTA to set the marker reference.

4. On the MG369xC's External Pulse Status menu, select On/Off to turn the pulse mode on.

Note that in many cases, the tone will go to the noise floor.

Note	The signal level may drift slowly after the pulse mode is turned on. (Make the measurement as soon as possible after turning the pulse mode on.) This drift is the result of the Sample/Hold circuit not holding the level because of a very low pulse duty factor (time ratio of RF ON to RF OFF). This drift will not be present in normal pulse operation as the minimum pulse repetition rate is 100 Hz.

5. On the spectrum analyzer, read the marker delta value and record the value as P_{depth} in the test record.

6. Repeat steps 1a to 5 for each frequency listed in the test record.

Chapter 4 — Performance Verification using Standard Test Equipment

4-1 Introduction

This chapter contains tests that can be used to verify the performance of the series MG369xC Synthesized Signal Generator to specifications. These tests support all instrument models having any version of firmware and instrument models with the following options:

- Option 2X, MG369xC (mechanical step attenuator)
- Option 2E, MG3691C (electronic step attenuator)
- Option 3 (ultra low phase noise)
- Option 3x (premium phase noise)
- Option 4 (digital down converter)
- Option 5 (analog down converter)
- Option 6 (analog sweep)
- Option 12 (external frequency and phase modulation)
- Option 14 (external amplitude modulation)
- Option 15x (high power output)
- Option 16 (high stability time base)
- Option 22 (low frequency audio DDS)
- Option 26x (external pulse modulation)
- Option 27 (internal low frequency and pulse generators)
- Option 28x (analog modulation suite)

Note	The verification tests in this chapter use standard test equipment as listed in Table 4-1 and can be used to verify the MG3691C, MG3692C, MG3693C, MG3694C, MG3695C and MG3697C models.

4-2 Automated Procedure

Fluke MET/CAL® Warranted Procedures are available to automate the verification procedures for the MG3691C, MG3692C, MG3693C, MG3694C and MG3695C found in this chapter. These procedures require MET/CAL® version 7.20E or later. See www.fluke.com for details and pricing.

4-3 Test Records

A blank copy of a sample performance verification test record for the MG369xC models is provided in Appendix B. Each test record contains the model-specific variables called for by the test procedures. It also provides a means for maintaining an accurate and complete record of instrument performance. We recommend that you copy these pages and use them to record the results of your initial testing of the instrument. These initial test results can later be used as benchmark values for future tests of the same instrument.

4-4 Connector and Key Notation

The test procedures include many references to equipment interconnections and control settings. For all MG369xC references, specific labels are used to denote the appropriate menu key, data entry key, data entry control, or connector (such as RF Output). Most references to supporting test equipment use general labels for commonly used controls and connections (such as Span or RF Input). In some cases, a specific label is used that is a particular feature of the test equipment listed in Table 4-1.

4-5 Test Equipment List

Table 4-1 provides a list of standard test equipment used for the performance verification tests and adjustments of the instrument. The test equipment setup is critical to making accurate measurements. In some cases, you may substitute test equipment having the same critical specifications as the test equipment indicated in the test equipment list (refer to "Measurement Uncertainty" on page 4-7).

Table 4-1. Test Equipment List (1 of 5)

Instrument	Critical Specification	Manufacturer/Model	Test Application[a]	Test Equipment Usage [b]
Computer running Windows XP	Cannot exceed the following configuration: Pentium 4 2.8 GHz 1 GB RAM 2 Serial ports CDROM Mouse Keyboard Monitor Network The computer must be dedicated during calibration and verification activities.	Dell or other common source	C, P	S, N
National Instrument PCI GPIB card	PCI GPIB card for computer	National Instrument	C, P	S, N
Anritsu RF verification and calibration software		Anritsu 2300-497	C, P	S
Spectrum Analyzer	Frequency: 100 kHz to 50 GHz Resolution bandwidth: 10 Hz	Agilent 8565EC	C, P	S

Table 4-1. Test Equipment List (2 of 5)

Instrument	Critical Specification	Manufacturer/Model	Test Application[a]	Test Equipment Usage [b]
Phase noise measurement system	Frequency range: 5 MHz to 26.5 GHz	Agilent Phase Noise Station: Anritsu K222B Insertable F-F Anritsu 34NKF50 N Male to K Female Adapter Anritsu K241C Power Splitter Anritsu SC3855 3670K50-2 KM-KM flex cable Agilent E5052B Signal Source Analyzer Agilent E5053A Down Converter Two Anritsu K120MM-20CM Semi ridged cables Two Anritsu K120MM0-20CM Semi ridged cables (will need to be bent on site to fit) Optical Mouse, PS2/USB for E5052B USB Keyboard for E5052B	P	S, N
Modulation analyzer	AM and FM measurement capability to > 500 MHz and –20 dBm	HP8901A	P	S
Frequency counter *For use in calibration and performance verification.* *For use with performance verification only.*	 Frequency range: 0.01 to 20 GHz Input impedance: 50 ohms Resolution: 1 Hz Other: External time base input Frequency range: 0.01 to 6 GHz Input impedance: 50 ohms Resolution: 1 Hz Other: External time base input	 For calibration and performance verification the recommendation is Anritsu model MF2414B For performance verification the recommendation is Anritsu model MF2412B	C, P	S, N
Power meter	Frequency: 100 kHz to 67 GHz Power range: –70 to +20 dBm	Anritsu model ML2437A/38A	C, P	S
Power sensor for power meter	Frequency: 0.01 GHz to 40 GHz (K) Connector Power range: –70 to +20 dBm	Anritsu model MA2474D	C, P	S
Power sensor for power meter	Frequency: 0.01 GHz to 50 GHz (V) Connector Power range: –70 to +20 dBm	Anritsu model MA2475D	C, P	S

Table 4-1. Test Equipment List (3 of 5)

Instrument	Critical Specification	Manufacturer/Model	Test Application[a]	Test Equipment Usage [b]
Power sensor for power meter	Frequency: 0.01 GHz to 67 GHz (V) Connector Power range: –30 to +20 dBm	Anritsu model SC7430 **or** Anritsu model SC7570	C, P	S
Power sensor for power meter	Frequency:100 kHz to 18 GHz (N) Connector Power range: –55 +20 dBm	Anritsu model SC7400	C, P	S
Adapter for power sensor calibration	N(m) to K(f)	Anritsu model 34NKF50	C, P	S
Adapters for power sensor calibration	N(m) to V(f)	Common source **or** Alternate to achieve N(m) to V(f): Anritsu model 34NK50 + 34VKF50 **or** Anritsu model 34NKF50 + 34VK50	C, P	S
Special AUX I/O cable assembly	Provides interface between the MG369xC and the power meter	Anritsu PN: 806-97	P	S
Digital multimeter	Minimum 1% RMS ACV accuracy at 100 kHz	Fluke 8840A or Agilent 34401A	P	S, N
Function generator	Frequency: 0.1 Hz to 15 MHz	Agilent 33120A	C, P	S, N
Digital sampling oscilloscope	Frequency: 50 GHz	Agilent 86100A with 83484A 50 GHz module	P	S, N
Frequency reference	Frequency: 10 MHz Accuracy: 5 x 10^{-12} parts/day	Absolute Time Corp., model 300 **or** Symmetricom (Datum) model 9390-9600	C, P	S, N
Measuring receiver See footnote [c]	Noise floor: < –140 dBm @ 500 MHz	Anritsu model ML2530A	C, P	S
Local oscillator	Frequency: 0.01 to 40 GHz	Anritsu Model MG3694C with options: 3 and 16 (unit must not have options 2B, 15B, or 22) **Note:** If the T2579 mixer box is ordered, then special SM6191 must be added to the LO.	C, P	S
Mixer	Frequency range: 500 MHz to 40 GHz Conversion loss: 10 dBm (typical)	Anritsu PN: 60-114	P	S
K(m) to K(m) Adapter	K(m) to K(m) connectors	Anritsu P/N: K220B	P	S

Table 4-1. Test Equipment List (4 of 5)

Instrument	Critical Specification	Manufacturer/Model	Test Application[a]	Test Equipment Usage [b]
Mixer box (for low level calibration) See footnote [c]	Frequency range: 0.01 GHz to 40 GHz	Anritsu PN: T2579	C, P	S
Low pass filter (Qty = 2) See footnote [c]	1.9 GHz LPF	Mini-Circuits BPL-1.9 **or** Anritsu PN: 1030-104	C, P	S
Attenuator for instrument model numbers MG3691C through MG3694C	Frequency range: DC to 40 GHz Attenuation: 3, 6, 10, and 20 dB (sizes and counts are determined depending on options and maximum output power of instrument)	Anritsu part number SC7879 K set of attenuators (41KC-3, 41KC-6, 41KC-10, 41KC-20) Must be calibrated - See footnote [d]) **or** Anritsu, model 41KC-3, 41KC-6, 41KC-10 or 41KC-20 (Must be calibrated - See footnote [d])	C, P	S, N
Attenuator for instrument model numbers MG3695C through MG3697C	Frequency Range: DC to 67 GHz Attenuation: 3, 6, 10, and 20 dB (sizes and counts are determined depending on options and maximum output power of instrument)	Anritsu part number SC7880 V set of attenuators (41V-3, 41V-6, 41V-10, 41V-20) (Must be calibrated - See footnote [e]) **or** Anritsu, model 41V-3, 41V-6, 41V-10 and 41V-20 (Must be calibrated - See footnote [e])	C, P	S, N
BNC Tee	Connectors: 50 Ohm BNC	Any common source	C, P	S, N
Generic 50 Ohm BNC RF cables and connectors		Any common source	C, P	S, N
Generic GPIB cables		Any common source	C, P	S, N
BNC to SMA adapter	BNC to SMA Adapter	Any common source	P	S, N
Armored Semi Rigid Test Port Cable K(m) to K(m) or semi-rigid cables	K(m) to K(m) flex cables **or** Semi-rigid cables	Anritsu SC3855 K(m) to K(m) flex cable (Must be calibrated - See footnote [d] [f]) **or** Anritsu K120mm-60CM custom semi-rigid cable (Must be calibrated - See footnote [d] [f])	C, P	S
Special Serial I/O Cable Assembly	Provides interface between the MG369xC and the PC	Anritsu P/N: T1678	C, P	S, N
Adapter V male to K female	Adapter V(m) to K(f)	Anritsu 34VKF50 (Must be calibrated - See footnote [d])	P, C	S, N

Table 4-1. Test Equipment List (5 of 5)

Instrument	Critical Specification	Manufacturer/Model	Test Application[a]	Test Equipment Usage [b]
Adapter K male to N female (For power sensor SC7400 and N5532B opt 504)	Adapter K(m) to N(f)	Anritsu 34NFK50 (Must be calibrated - See footnote [g])	P	S, N
Adapter N male to K female	Adapter N male to K female	Anritsu 34NKF50 (Must be calibrated - See footnote [g])	P	S, N
Adapter N male to K female	Adapter N male to K female	Anritsu 34NKF50 (Must be calibrated - See footnote [e])	P	S, N
Armored Semi Rigid Test Port Cable (K Connector Female to K Connector Male)	Armored Semi Rigid Test Port Cable (K Connector Female to K Connector Male)	Anritsu 3670K50-2 (Must be calibrated - See footnote [d] [f])	P, C	S, N
Armored Semi Rigid Test Port Cable (V Connector Female to V Connector Male)	Armored Semi Rigid Test Port Cable (V Connector Female to V Connector Male)	Anritsu 3670V50A-2 (Must be calibrated - See footnote [e] [f])	P, C	S, N

a. P = Performance Verification Tests, C = Calibration, T = Troubleshooting

b. S = Standard Test Equipment, N = N5531S Measurement Receiver equipment

c. Only needed if option 2X is installed.

d. Calibrated at the following data points: 100 kHz, 1 MHz, 10 MHz, 100 MHz, 500 MHz to 40 GHz in 500 MHz steps

e. Calibrated at the following data points: 100 kHz, 1 MHz, 10 MHz, 100 MHz, 500 MHz to 67 GHz in 500 MHz steps

f. These cables are not designed for repeated bending. Bend them into the desired shape, then avoid further bending.

g. Calibrated at the following data points: 100 kHz, 1 MHz, 10 MHz, 100 MHz, 500 MHz to 4 GHz in 500 MHz steps.

4-6 Measurement Uncertainty

The test records found in Appendix B specify a measurement uncertainty. The measurement uncertainty listed in each test record includes the best estimate of the errors contributed by the measurement, test equipment, standards, and other correction factors (for example, calibration factors and mismatch error) based on the suggested equipment, the equipment setup, and the prescribed test procedure. Most of the uncertainties are type-B per the ISO/IEC TAG 4 Guide for the Expression of Uncertainty in Measurement (GUM).

4-7 Internal Time Base Aging Rate Test (Optional)

The following test can be used to verify that the MG369xC 10 MHz time base is within its aging specification. The instrument derives its frequency accuracy from an internal 10 MHz crystal oscillator standard. (With Option 16 installed, frequency accuracy is derived from an internal high-stability 10 MHz crystal oscillator.) An inherent characteristic of crystal oscillators is the effect of crystal *aging* within the first few days to weeks of operation. Typically, the frequency of the crystal oscillator increases slightly at first, then settles to a relatively constant value for the rest of its life.

Note	Do not confuse crystal aging with other short term frequency instabilities, for example, noise and temperature. The internal time base of the instrument may not achieve its specified aging rate before the specified warm-up time of 7 to 30 days has elapsed; therefore, this performance test is optional.

For the greatest absolute frequency accuracy, allow the MG369xC to warm up until its RF output frequency has stabilized (usually 7 to 30 days). Once stabilized, the change in reference oscillator frequency should remain within the aging rate if (1) the time base oven is not allowed to cool, (2) the instrument orientation with respect to the earth's magnetic field is maintained, (3) the instrument does not sustain any mechanical shock, and (4) ambient temperature is held constant. This test should be performed upon receipt of the instrument and again after several days or weeks to fully qualify the aging rate.

Note	Before performing this procedure ensure that all test equipment is calibrated. Refer to the manufacturer's test equipment manual.

Note	For test settings and recording test data for this section refer to page B-2 in Appendix B, "Test Records (Standard Test Equipment)".

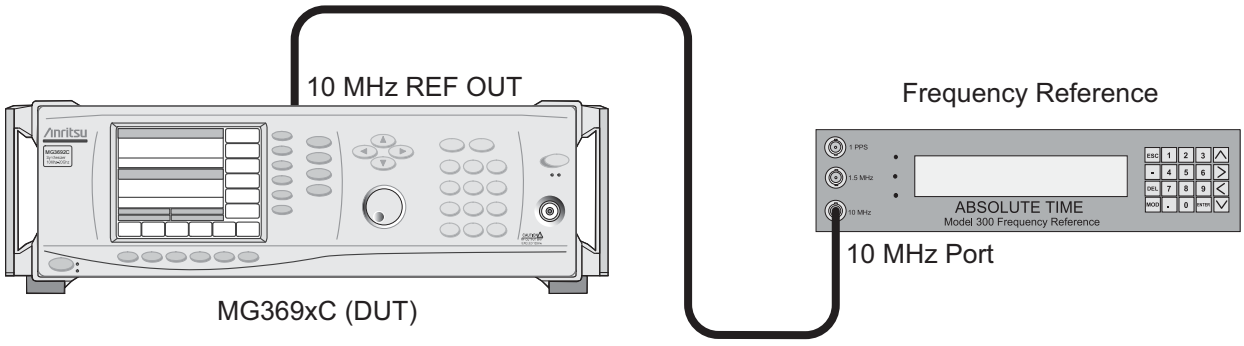

Figure 4-1. Equipment Setup for Internal Time Base Aging Rate Tests

Note	There are two procedures for Internal Time Base Aging Rate based on the frequency reference used. The first procedure is for Absolute Time Corp model 300 use, the second is for Symmetricom (Datum) model 9390-9600 use.

Internal Time Base Aging Rate Test with Absolute Time Model 300

Test Setup

Connect the MG369xC rear panel 10 MHz REF OUT to the frequency reference front panel input connector labeled 10 MHz when directed to do so during the test procedure.

Test Procedure

The frequency error is measured at the start and finish of the test time period of 24 hours. The aging rate is the difference between the two error readings.

1. Set up the model 300 frequency reference as follows:
   - **a.** Press the ESC key until the MAIN MENU is displayed.
   - **b.** At the MAIN MENU display, press 1 to select the CONFIGURATION MENU.
   - **c.** At the CONFIGURATION MENU display, press 8 to select MEAS.
   - **d.** Press the MOD key and use the Up/Down arrow keys to get to the menu display: MEASUREMENT = FREQ.
   - **e.** Press the ENTER key.
   - **f.** Press the ESC key until the MAIN MENU is displayed.
   - **g.** At the MAIN MENU display, press 3 to select the REVIEW MENU.
   - **h.** At the REVIEW MENU display, press 8 to select TFM.
2. Connect the MG369xC rear panel 10 MHz REF OUT signal to the frequency reference front panel 10 MHz input.
3. Wait approximately 90 minutes (default setting) until the FMFOM on the frequency reference display decreases from 9 to 1. (The default setting is recommended to achieve optimum measurements.)
4. The frequency error in the signal under test is displayed in ps/s (picoseconds/second). For example, an error of –644681 ps/s is -644681×10^{-12} or -6.44681×10^{-7} away from the 10 MHz internal reference on the frequency reference.
5. The frequency error display is continuously updated as a running 5,000-second average. The averaging smooths out the short-term instability of the oscillator.
6. Record the frequency error value displayed on the frequency reference in the test record.
7. Wait for 24 hours, then record the frequency error value in the test record.
8. The aging rate is the difference between the two frequency error values.
9. Record the computed result in the test record. To meet the specification, the computed aging rate must be $< 2 \times 10^{-9}$ per day ($< 5 \times 10^{-10}$ per day with Option 16).

Internal Time Base Aging Rate Test with Symmetricom (Datum) Model 9390-9600

Test Setup

Connect the MG369xC rear panel 10 MHz REF OUT to the Symmetricom (Datum) model 9390-9600 frequency standard rear panel BNC connector labeled J10. The frequency standard must be actively tracking at least three satellites, and the oscillator should be stabilized/locked (i.e., the front panel TRACKING and LOCKED LEDS should be illuminated).

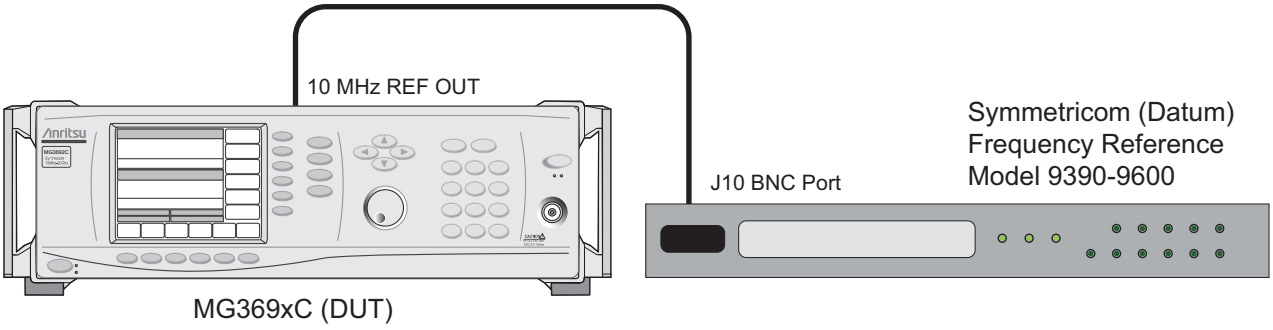

Figure 4-2. Internal Time Base Aging Rate Test Setup

Test Procedure

On the frequency standard:

1. Cycle the menu screen to the sixth screen (External Frequency Measurement) as shown below.

Row 1	EXT Freq: +0000E-14 / +0000E+00 SEC *
Row 2	<1>Enter Freq <2>ENABLE <3>DISABLE

2. Push keyboard switch “1” followed by the number 10000000. This will input the test frequency of 10 MHz.
3. Push keyboard switch “2” to ENABLE the external frequency measurement option. (pushing switch “3” will DISABLE it)
4. Confirm that the external frequency measurement option is enabled and the unit is locked by observing an “*” in row 1, column 35 of the display. If “NOTLK” appears then the frequency standard is not locked and testing must be halted. If no “*” appears then the unit is not connected properly.
5. Confirm that the measurement count has started to increment. This will be displayed in row 1, columns 20 through 29 of the display. Allow approximately 5 minutes for everything to stabilize.
6. Record the date/time of the test starting and the frequency offset displayed in row 1 column 9 through 17 on the test record as frequency error value.
7. After 24 hours push keyboard switch 3 to disable the measurement. Note that the “*” will disappear.
8. Record the date and time of the testing completion, and also the frequency offset displayed in row 1 column 9 through 17 on the test record as frequency error value (after 24 hours).
9. The aging rate is the difference between frequency error value and frequency value (after 24 hours). Record this value into the test record and compare it to the upper limit.

4-8 Spurious Signals Tests

The following tests can be used to verify that the signal generator meets its spurious emissions specifications for RF output signals from 0.01 to 50 GHz.

The MG369xC's CW RF output signal is fed directly into a spectrum analyzer. The CW frequency and power level is referenced and a peak search function on the spectrum analyzer is utilized to find any spurious signals above the specified limit.

Note	Before performing this procedure ensure that all test equipment is calibrated. Refer to the manufacturer's test equipment manual.

Note	For test settings and recording test data for this section refer to Appendix B, "Test Records (Standard Test Equipment)" from page B-3 to page B-12

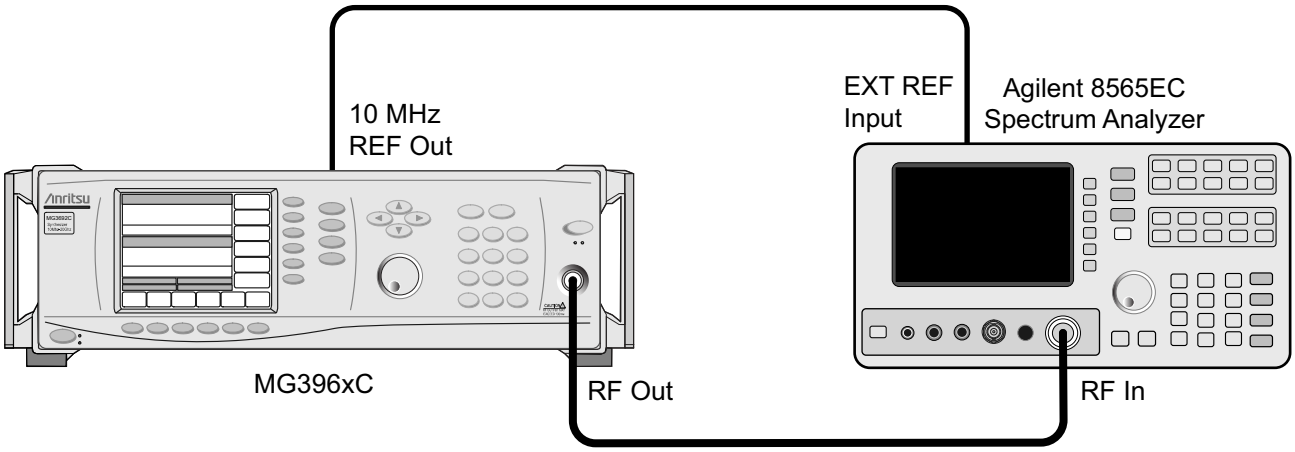

Figure 4-3. Equipment Setup for Spurious Signals Test

Harmonic Test Setup

Connect the equipment shown in Figure 4-3, as follows:

1. Connect the MG369xC rear panel 10 MHz REF OUT to the spectrum analyzer's external reference input.
2. Connect the MG369xC RF Output to the spectrum analyzer's RF input.

Note	Power line and fan rotation spurious emissions are tested as part of the single sideband phase noise test in Section 4-9.

3. Set up the spectrum analyzer as follows:
   - **a.** Press the **PRESET** key.
   - **b.** Press **AUX CTRL**.
   - **c.** Press Rear Panel.
   - **d.** Press 10MHz and set to "EXT".

Harmonic Test Procedure

Note	For test settings and recording test data for this section refer to Appendix B, "Test Records (Standard Test Equipment)" from page B-3 to page B-5

1. Determine the first test frequency to test based on the test record, options and model number.
2. Set up the MG369xC as follows:
   - **a.** Reset the instrument by pressing **SYSTEM**, then Reset. After reset, the CW menu is displayed.
   - **b.** Press Edit F1 to open the current frequency parameter for editing and set F1 to the first appropriate test frequency (based on model and options) in the test record.
   - **c.** Press Edit L1 to open the current power level parameter for editing.
   - **d.** Set L1 to +10 dBm or to the maximum specified power level, whichever is less.

     Refer to Appendix B, Technical Data Sheet, for the maximum specified power levels. For the electronic version of this manual, refer to the MG369xC Technical Data Sheet, PN: 11410-00515 on the Anritsu Internet site.
3. Set up the spectrum analyzer as follows:
   - **a.** Press the **AMPLITUDE** key. Press REF LVL and enter the current power level setting (L1) of the MG369xC.
   - **b.** Press the **FREQUENCY** key and enter the current frequency setting (F1) of the MG369xC.
   - **c.** Press the **BW** key and press MAN. Set to the first appropriate test frequency's RBW/VBW value (based on model and options) in the test record.
   - **d.** Press the **SPAN** key and set to the first appropriate test frequency's SPAN value (based on model and options) in the test record.
4. Press the **PEAK SEARCH** key, then select MARKER DELTA.
5. Press the **FREQUENCY** key on the spectrum analyzer and enter next harmonic frequency listed in the test records.
6. Press the **PEAK SEARCH** key,
7. Record the reading from the spectrum analyzer into the test record.
8. Repeat Step 5 through Step 7 for each of the harmonic frequencies listed in the test record.
9. Press Edit F1 on the MG369xC to open the current frequency parameter for editing and set F1 to the next appropriate test frequency (based on model and options) in the test record.
10. On the SPA, press the **FREQUENCY** key and enter the current frequency setting (F1) of the MG369xC.
11. Determine if the power level for the MG369xC and spectrum analyzer changes based on the new frequency or options, if so, adjust the MG369xC L1 and spectrum analyzer amplitude as needed.
12. Press the **SPAN** key and enter the value listed in the test record for the appropriate test frequency.
13. Press the **BW** key and enter the value listed in the test record for the appropriate test frequency.
14. Repeat Step 4 through Step 13 for each of the test frequencies listed in the test record.

Non-Harmonic Test Setup

Connect the equipment, shown in Figure 4-3.

1. Connect the MG369xC rear panel 10 MHz REF OUT to the spectrum analyzer's external reference input.
2. Connect the MG369xC RF Output to the spectrum analyzer's RF input.

Note	Power line and fan rotation spurious emissions are tested as part of the single sideband phase noise test in Section 4-9.

3. Set up the spectrum analyzer as follows:
   a. Press the **PRESET** key.
   b. Press **AUX CTRL**.
   c. Press Rear Panel.
   d. Press 10MHz and set to "EXT".
4. Set up the MG369xC as follows:
   Reset the instrument by pressing **SYSTEM**, then Reset.
   After reset, the CW menu is displayed.

Non-Harmonic Test Procedure

Note	For test settings and recording test data for this section refer to Appendix B, "Test Records (Standard Test Equipment)" starting on page B-7.

Part 1

1. Set up the MG369xC as follows:
   a. Press Edit F1 to open the current frequency parameter for editing.
   b. Set F1 to the appropriate test frequency (based on model and options) in the test record, part 1.
   c. Press Edit L1 to open the current power level parameter for editing.
   d. Set L1 to +10 dBm or to the maximum specified power level, whichever is less. (Refer to Appendix B, Technical Data Sheet, for the maximum specified power levels.)
2. Set up the spectrum analyzer as follows:
   a. Press the **AMPLITUDE** key.
   b. Press REF LVL and enter the current power level setting (L1) of the MG369xC.
   c. Press the **FREQUENCY** key.
   d. Press Start Freq.
   e. Enter the current spectrum analyzer start frequency from the test record.
   f. Press Stop Freq.
   g. Enter the current spectrum analyzer stop frequency from the test record.
   h. Press the **BW** key.
   i. Press Res BW to MAN.
   j. Enter the current spectrum analyzer RBW value from the test record.
3. Press the **PEAK SEARCH** key, and then select MARKER DELTA.
4. Set up the spectrum analyzer as follows:
   a. Press the **FREQUENCY** key.

b. Press Start Freq.

c. Enter the next spectrum analyzer start frequency from the test record.

d. Press Stop Freq.

e. Enter the next spectrum analyzer stop frequency from the test record.

f. Press the **BW** key.

g. If needed, press Res BW to MAN.

h. Enter the next spectrum analyzer RBW value from the test record.

5. Press **PEAK SEARCH** then Next Peak.

6. Record the reading from the spectrum analyzer Delta MKH reading into the test record.

7. Repeat steps 4 through 6 for same specified MG369xC frequency listed in the test record, part 1.

8. Repeat steps 1 through 7 for same each MG369xC frequency groups listed in the test record, part 1.

Part 2

Note	For test settings and recording test data for this section refer to Appendix B, "Test Records (Standard Test Equipment)" starting on page B-10.

1. Set up the MG369xC as follows:

a. Press Edit F1 to open the current frequency parameter for editing.

b. Set F1 to the appropriate test frequency (based on model and options) in the test record, part 2.

c. Press Edit L1 to open the current power level parameter for editing.

d. Set L1 to +10 dBm or to the maximum specified power level, whichever is less. (Refer to Appendix B, Technical Data Sheet, for the maximum specified power levels.)

2. Set up the spectrum analyzer as follows:

a. Press the **AMPLITUDE** key.

b. Press REF LVL and enter the current power level setting (L1) of the MG369xC.

c. Press the **FREQUENCY** key.

d. Press Center Freq.

e. Enter the current spectrum analyzer center frequency from the test record.

f. Press **SPAN**.

g. Enter the current spectrum analyzer span frequency from the test record.

h. Press the **BW** key.

i. Press Res BW to MAN.

j. Enter the current spectrum analyzer RBW value from the test record.

3. Press the **PEAK SEARCH** key, and then select MARKER DELTA, which sets the reference for the following measurements.

4. Set up the spectrum analyzer as follows:

a. Press the **FREQUENCY** key.

b. Press Center Freq.

c. Enter the next spectrum analyzer center frequency from the test record.

d. Press the **BW** key.

e. If needed, press Res BW to MAN.

f. Enter the next spectrum analyzer RBW value from the test record.

5. Press **PEAK SEARCH** then Next Peak.
6. Record the reading from the spectrum analyzer Delta MKH reading into the test record.
7. Repeat steps 4 through 6 for same specified MG369xC frequency listed in the test record, part 2.
8. Repeat steps 1 through 7 for same each MG369xC frequency groups listed in the test record, part 2.

4-9 Single Sideband Phase Noise Test

The section below contains the information to perform the verification using an Agilent E5052B Signal Source Analyzer and E5053A down converter.

Note	For test settings and recording test data for this section refer to Appendix B, "Test Records (Standard Test Equipment)" from page B-13 to page B-47

Table 4-2. Recommend Equipment List

Recommend Part Number	Quantity	Description	Vendor
K222B	1	Insertable F-F	Anritsu
34NKF50	1	N Male to K Female Adapter	Anritsu
K241C	1	Power Splitter	Anritsu
SC3855	1	3670K50-2 KM-KM flex cable	Anritsu
E5052B	1	Signal Source Analyzer	Agilent
E5053A	1	Down Converter	Agilent
K120MM-20CM	2	Semi ridged cables K120MM-20CM (this will need to be bent on site to fit)	Anritsu
	1	Mouse, Optical, PS2/USB for E5052B	
	1	Keyboard USB for E5052B	

Test Setup

Note	The MG369xC, E5052B and the E5053A Down converter must be powered on for a minimum of 30 minutes before performing these measurements. The E5052B and E5053A must be installed and set up in accordance with the instructions supplied with the instruments before continuing with this procedure.

1. Set up the MG369xC as follows:
   a. Reset the instrument by pressing **System**, then Reset. Upon reset, the CW menu is displayed.
   b. Press **Frequency** to open the current frequency parameter for editing.
   c. Set F1 to the CW frequency indicated in the test record.

Note	Use the correct table based on the options installed in the MG369xC. Also note that serial numbers 103314 and later have a different phase specifications than the unit produced before this time frame. Because of this there are two sets of phase noise test records. Make sure to choose the correct one based on the unit's serial number.

d. Press **Edit L1** to open the current power level parameter for editing. Set L1 to +10 dBm or the maximum leveled power of the instrument which ever is lower.

Note	If you are not using the splitter, reduce L1 power level to +8 dBm.

e. Connect the MG369xC as shown in Figure 4-4.

- Connect the output of the MG369xC to the input of the splitter.
- Connect one of the outputs of the splitter to the RF input of the E5052B
- Connect one of the outputs of the splitter to the RF input of the down converter.

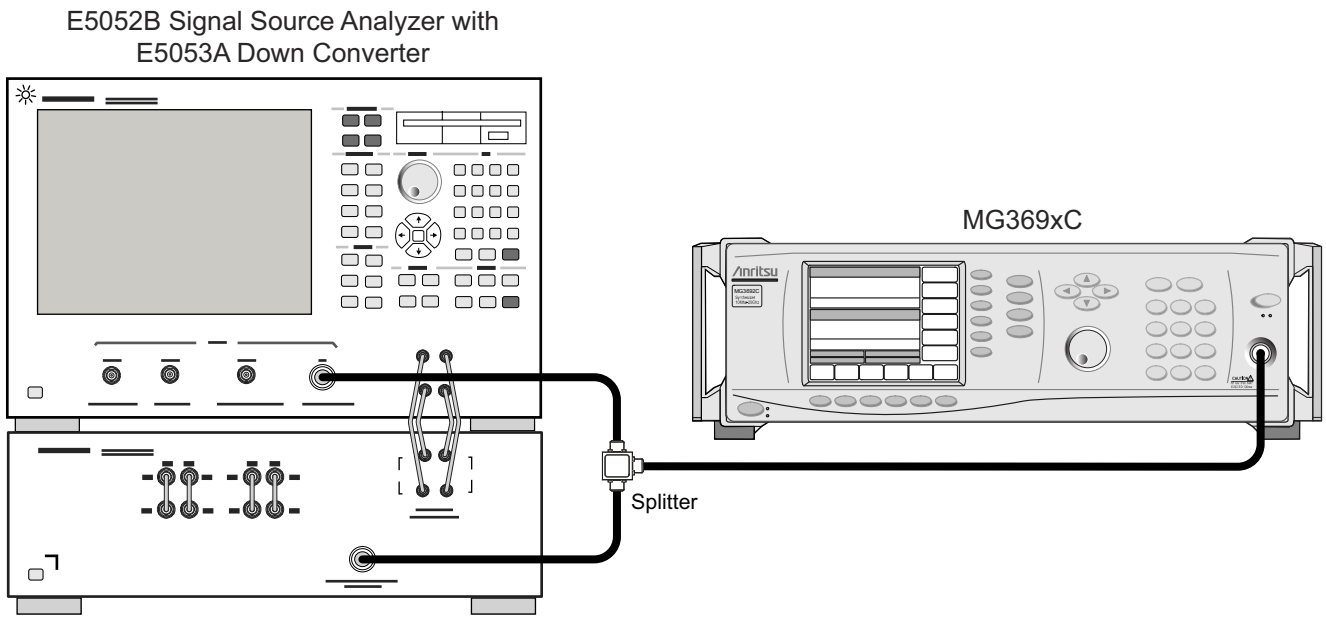

Figure 4-4. Equipment Setup for Single Sideband Phase Noise Test with E5052B and E5053A

2. E5052B and E5053A setup:

a. Press the green **Preset** button, then touch Factory.

b. Press **Measure/View**, then touch Phase Noise.

c. Press **Window Max**.

d. Press Start/Center, then touch 10 Hz.

e. Press **Stop/Span**, then touch 1 MHz.

f. Press **Marker**, then:

Touch Marker 1, enter 10 then press X1 to obtain 10 Hz.

Touch Marker 2, enter 100 then press X1 to obtain 100 Hz.

Touch Marker 3, enter 1 then press k/M to obtain 1 kHz.

Touch Marker 4, enter 10 then press k/M to obtain 10 kHz.

Touch Marker 5, enter 100 then press k/m to obtain 100 kHz.

Touch Marker 6, enter 1 then press M/u to obtain 1 MHz.

g. Press **Avg/BW**, then touch correlation and set to 10.

Test Procedure

Note	For test settings and recording test data for this section refer to Appendix B, "Test Records (Standard Test Equipment)" from page B-13 to page B-47

1. Refer to the test records for Phase Noise. Use the correct table based on the options installed in the MG369xC.

Note	Serial numbers 103314 and later have a different phase specifications than the unit produced before this time frame. Because of this there are two sets of phase noise test records. Make sure to choose the correct one based on the unit's serial number. For serial numbers below 103314 use the records from B-13 to B-29. For Serial numbers 103314 and higher, use the records from B-31 to B-47.

2. Determine the test frequency.
3. Set the MG369xC F1 to the frequency called out in the test records.
4. Press **Input** on the E5052B.

Note	Frequencies from 10 MHz to 5 GHz are measured using the E5052B. Frequencies from 5 to 25 GHz are measured using the 5053A down converter and E5052B.

   a. If the test frequencies are from 10 MHz to 5 GHz:

   Touch Downconverter | RF input | E5053A.

   This selects the direct measurement into the E5053A.

   Touch Downconverter and confirm it is off.

   b. If the test frequencies are from > 5 GHz to 25 GHz:

   Touch Downconverter.

   Touch Downconverter and make sure it is ON.

   Touch RF input.

   Touch Downconverter.

   This selects the direct measurement into the downconverter.

5. Press **Setup**.

Note	There are different bands in the E5053A that need to be manually set.

   a. Touch Frequency Band.

   If the test frequencies is from 10 MHz to 40 MHz, touch 10M - 41MHz.

   If the test frequencies is from 39 MHz to 101 MHz, touch 39M - 101MHz.

   If the test frequencies is from 99 MHz to 1.5 GHz, touch 99M - 1.5GHz.

   If the test frequencies is from 250 MHz to 5 GHz, touch 250M - 7GHz.

   If the test frequencies is from > 5 GHz to 10 GHz (requires downconverter is on and is the selected input), touch 3G - 10GHz.

   If the test frequencies is from 9 GHz to 26.5 GHz (requires downconverter is on and is the selected input), touch 9G - 26.5GHz.

   b. Set IF Gain to:

   50 dB if DUT CW frequency < 5 GHz.

20 dB if DUT CW frequency ≥ 5GHz.

c. Touch Nominal Frequency and enter the test frequency from the test record.

6. Press ATTN.

a. Set to 0 dB if DUT CW frequency is < 5 GHz.

b. set to 10 dB if DUT CW frequency >= 5GHz.

7. Press Trigger

a. Touch Continuous.

b. Touch Single.

At the upper right of the screen the E5052B should have the approximate test frequency displayed, see Figure 4-5.

Figure 4-5. E5052B Display

8. Press **Trace/View**.

a. Press Spurious.

b. Press Power (dBc).

Now white spikes may appear on the screen indicating the spurs, see Figure 4-5.

c. Press Spurious List and a new screen will appear.

d. This screen gives the spurious signal's frequency and power levels. The format is:

`Frequency in hertz, Power level in dBc`

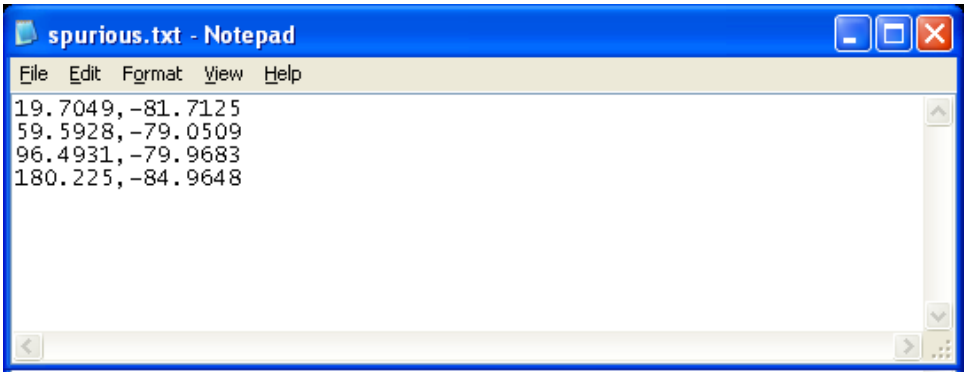

Figure 4-6. Spurious List

9. Compare these values to the appropriate frequency in the test records for “Single Sideband Phase Noise Test: Power Line and Fan Rotation Emissions”. Record any values which are out of specification.
10. Close the Spurious List window.
11. Press **Trace/View**.
    a. Press Spurious (note: it may be required to touch the down arrow at the bottom of the right screen to locate).
    b. Touch OMIT.

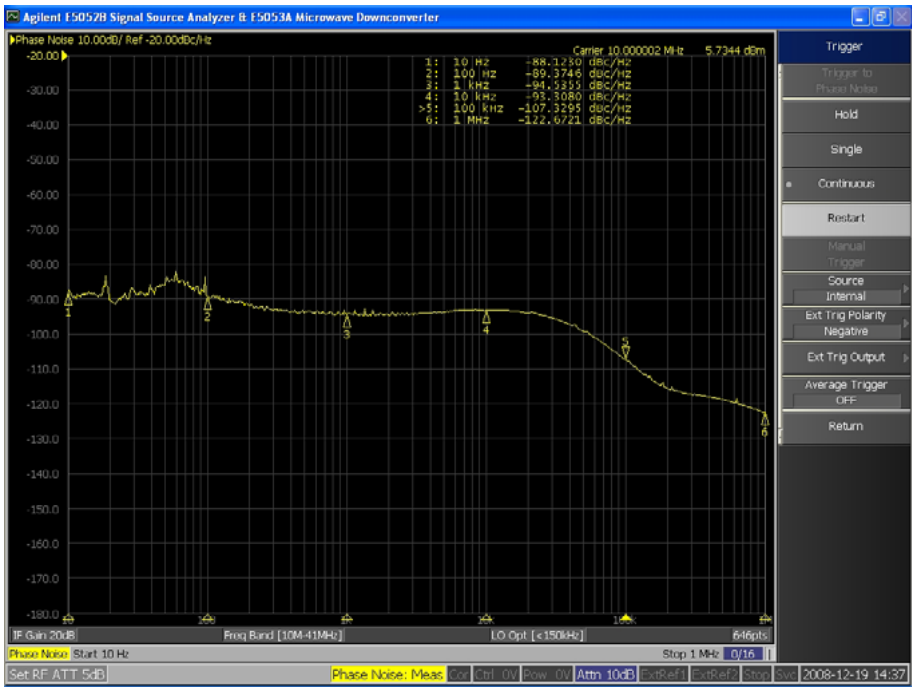

Figure 4-7. Phase Noise/Marker Values

12. Record phase noise/marker values into the test records.
13. Refer to the next frequency in the Single Sideband Phase Noise Test.
14. Press **Trigger** | Continuous.
15. Return to Step 2 and repeat this test until all test frequencies are verified for the particular model and option configuration under test.

4-10 Power Level Accuracy and Flatness Tests

The following tests can be used to verify that the MG369xC meets its power level specifications. Power level verifications are divided into four parts: log conformity, power level accuracy (to –50 dBm), power level accuracy (–50 dBm to –100 dBm), and power level flatness. Accurate power level measurements below –100 dBm are not currently feasible.

Note	For test settings and recording test data for this section refer to Appendix B, "Test Records (Standard Test Equipment)" from page B-49 to page B-75

Note	Before performing this procedure ensure that all test equipment is calibrated. Refer to the manufacturer's test equipment manual.

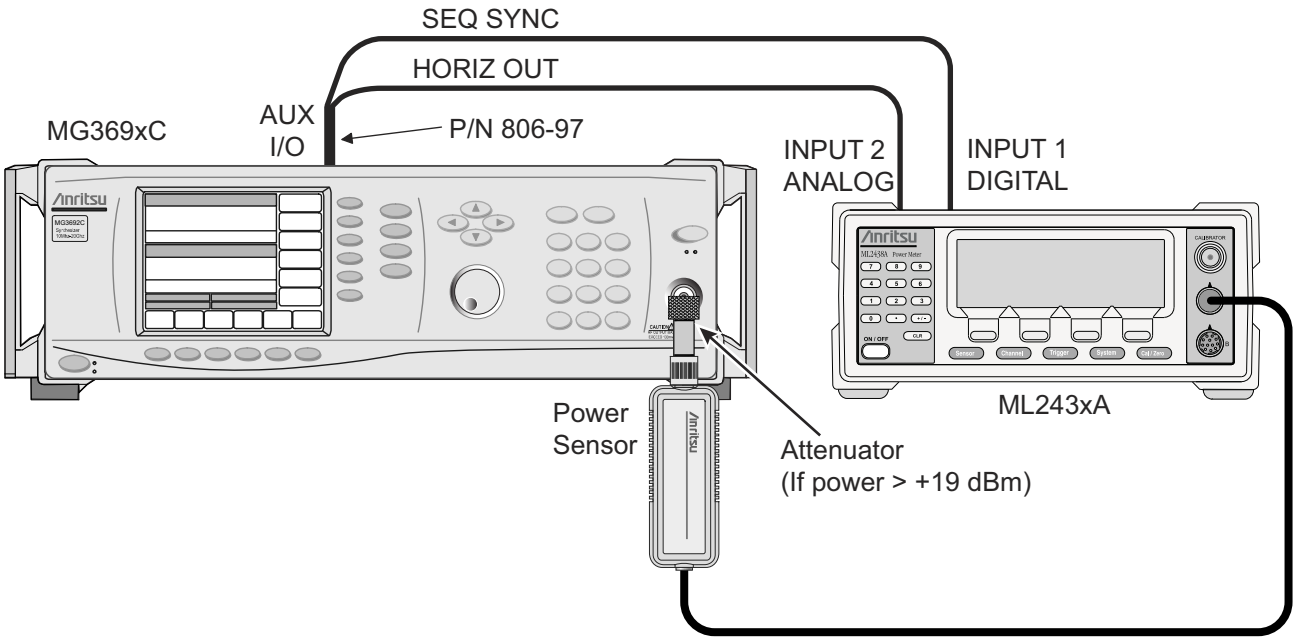

Figure 4-8. Equipment Setup for Power Level Accuracy and Flatness Tests Above –50 dBm

Initial Test Setup

For all power level measurements above –50 dBm, connect the equipment, shown in Figure 4-8, as follows:

Caution	To prevent damage to the power sensor, use a fixed attenuator when measuring power levels above +19 dBm.

1. Calibrate the power meter with the appropriate power sensor.

Note	On MG3697C units install the SC7430 or SC7570 at test frequencies ≥ 60 GHz.

2. Connect the power sensor to the RF Output of the MG369xC (use a fixed attenuator when measuring power levels above +19 dBm).
3. Connect the special AUX I/O interface cable (Anritsu PN: 806-97) to the MG369xC rear panel AUX I/O connector. Connect the cable BNC connectors as follows:
   a. Connect the cable labeled "SEQ SYNC" to the power meter rear panel INPUT 1 DIGITAL connector.

b. Connect the cable labeled “HORIZ OUT” to the power meter rear panel INPUT 2 ANALOG connector.

Power Level Log Conformity

Note	For test settings and recording test data for this section refer to Appendix B, “Test Records (Standard Test Equipment)” starting on page B-49.

The log conformity test verifies the dynamic range and level accuracy of the Automatic Level Control (ALC) loop. Power level log conformity is tested in both pulse (if equipped) and non-pulse modes by stepping the output power level down in 1 dB increments from its maximum rated power level and measuring the output power level at each step.

1. Set up the power meter as follows:

a. Reset the power meter by pressing:

System | Setup | -more- | PRESET | RESET

b. Configure the power meter to perform power measurements by pressing:

Sensor | Setup | MODE | Default

c. Configure the power sensor's calibration factor source by pressing:

Sensor | CalFactor | SOURCE | V/GHz until V/GHZ is displayed.

d. Setup the minimum V/GHz range by pressing:

Setup | Start F

e. Enter the minimum frequency of the MG under test or minimum of the power meter.

f. Setup the maximum V/GHz range by pressing:

Setup | Stop F

g. Enter the maximum frequency of the MG under test or maximum of the power meter.

h. Press any hard key to begin the measurement.

Caution	To prevent damage to the power sensor, use a fixed attenuator when measuring power levels above +19 dBm.

2. Set up the MG369xC as follows:

a. Reset the instrument by pressing **SYSTEM**, then Reset. After reset, the CW menu is displayed.

b. If the DUT has a step attenuator (Option 2):

(1) Press **Level** to open the Level Control menu.

(2) Press ALC Mode, then press Attenuate> to open the Attenuator Control menu.

(3) Press Decouple to decouple the attenuator from the ALC loop.

c. Press **Frequency** to open the current frequency parameter for editing.

d. Set F1 to the CW frequency indicated in the test record.

e. Press Edit L1 to open the current power level parameter for editing.

f. Set L1 to the first applicable power level indicated in the test record.

Note	For models with Option 22, rated output power is reduced by 2 dB.

3. Measure the output power level with the power meter and record the reading in the test record.

4. On the MG369xC, use the cursor control key (Arrow keys) to decrement L1 to the next test power level in the test record. Measure and record the power meter reading in the test record.
5. Repeat step 4 for each of the test power levels listed in the test record for the current CW frequency.
6. Repeat steps 2c through 5 for all CW frequencies listed in the test record.
7. For models with external pulse modulation:
   a. Press **Modulation** to open the Modulation menu.
   b. Press Pulse, then select external pulse mode by pressing Internal/External, if required.
   c. Turn the pulse mode on by pressing On/Off.
   d. Repeat steps 2c through 6.

Power Level Accuracy (≥ –50 dBm)

Power level accuracy for power levels of –50 dBm and above are tested by stepping the output power level down in 5 dB increments from its maximum rated power level and measuring the output power level using a power meter at each step.

Note	For test settings and recording test data for this section refer to Appendix B, "Test Records (Standard Test Equipment)" starting on page B-51.

1. Set up the power meter as follows:
   a. Reset the power meter by pressing:
      System | Setup | -more- | PRESET | RESET
   b. Configure the power meter to perform power measurements by pressing:
      Sensor | Setup | MODE | Default
   c. Configure the power sensor's calibration factor source by pressing:
      Sensor | CalFactor | SOURCE | V/GHz, until V/GHZ is displayed.
   d. Setup the minimum V/GHz range by pressing:
      Setup | Start F
   e. Enter the minimum frequency of the MG under test or minimum of the power meter.
   f. Setup the maximum V/GHz range by pressing:
      Setup | Stop F
   g. Enter the maximum frequency of the MG under test or maximum of the power meter.
   h. Press any hard key to begin the measurement.
2. Set up the MG369xC as follows:
   a. Reset the instrument by pressing **SYSTEM**, then Reset. After reset, the CW menu is displayed.
   b. Press Edit F1 to open the current frequency parameter for editing.
   c. Set F1 to the CW frequency indicated in the test record.
   d. Press Edit L1 to open the current power level parameter for editing.
   e. Set L1 to the power level indicated in the test record.
3. Measure the output power level with the power meter and record the reading in the test record.
4. On the MG369xC, use the cursor control key (Arrow keys) to decrement L1 to the next test power level in the test record. Measure and record the power meter reading in the test record.
5. Repeat step 4 for each of the test power levels listed in the test record (down to –50 dBm) for the current CW frequency.

6. Repeat steps 2b through 5 for all CW frequencies listed in the test record.

Power Level Accuracy (< –50 dBm)

Power level accuracy for power levels below –50 dBm is tested in two methods. First, by measuring the MG369xC's RF output directly on a measuring receiver; second, by down converting the MG369xC's RF output and measuring the down converted IF on a measuring receiver. In both cases, a reference power level is set on the measuring receiver and the output power level is stepped down in 5 dB increments. The relative output power level is then measured at each step.

Note	For test settings and recording test data for this section refer to Appendix B, "Test Records (Standard Test Equipment)" starting on page B-51.

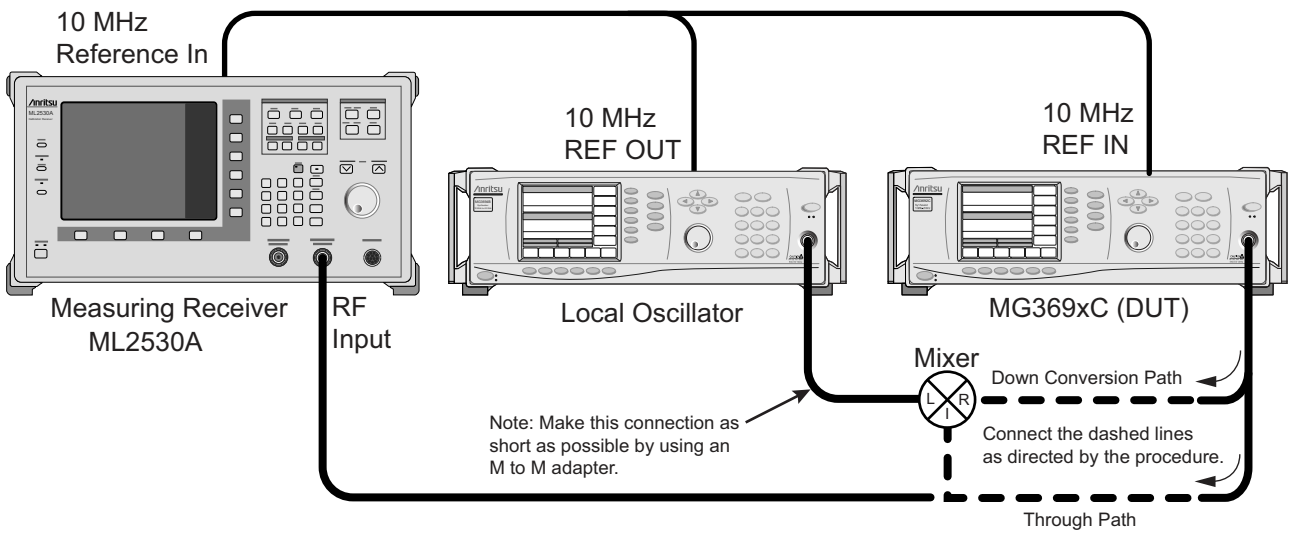

Figure 4-9. Equipment Setup for Power Level Accuracy and Flatness Tests Below –50 dBm

Test Setup

For all power level measurements below –50 dBm, connect the equipment, shown in Figure 4-9, as follows:

1. Ensure the ML2530 receiver is calibrated.

   Perform the range cal for the following frequency points. The calibration should include ranges 1-3 with a bandwidth of 10 Hz.

   - 8.51 MHz
   - 10 MHz
   - 15 MHz
   - 60 MHz
   - 500 MHz
   - 600 MHz
   - 1 GHz
   - 2 GHz

2. For RF frequencies below 2400 MHz, connect the MG369xC RF Output to the RF input of the measuring receiver.
3. For RF frequencies above 2400 MHz:

a. Connect the RF Output of the LO and the MG369xC to the mixer's (PN: 60-114) L-port and R-port, respectively, using low loss cables.

b. Connect the mixer's I-port to the RF input of the measuring receiver.

4. Using a BNC tee, connect the 10 MHz reference output from the measuring receiver to the MG369xC's and local oscillator's 10 MHz REF IN connectors.

5. If using the T2579 Mixer box, see Figure 4-10 and make the following connections:

a. Connect the Measuring ML2530 receiver to T2579 Mixer box connector labeled To ML2530.

b. Connect the MG37022A DUT output to T2579 Mixer box connector labeled DUT.

c. Connect the LO output to T2579 Mixer box connector labeled LO.

d. Connect a Low Pass Filter and BNC cable to T2579 Mixer box connector labeled HI Band then connect it to the LO's BNC connector labeled HI Band at rear panel.

e. Connect via a Low Pass Filter and BNC cable to T2579 Mixer box connector labeled LO Band then connect it to the LO's BNC connector labeled LO band at rear panel.

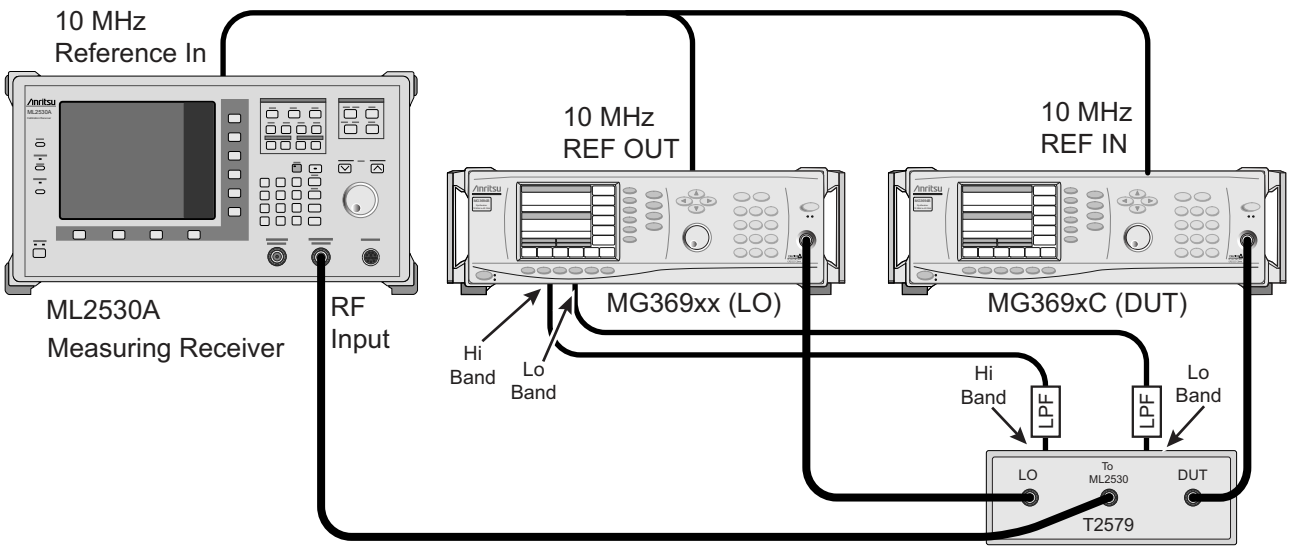

Figure 4-10. Equipment Setup for Power Level Accuracy and Flatness Tests Below –50 dBm Using T2579

Note	If using the T2579 mixer box moving the cables is not required because the T2579 box automatically connects to the proper locations.

Test Procedure

The following procedure lets you verify the power accuracy and flatness for all power level measurements below –50 dBm.

1. Initial setup of the MG369xC as follows:

a. Reset the instrument by pressing **SYSTEM**, then Reset. After reset, the CW menu is displayed.

2. Initial setup of the LO:

a. Reset the instrument by pressing **System**, then Reset. After reset, the CW menu is displayed.

b. Press Edit L1 to open the current power level parameter for editing.

c. Set L1 to +6 dBm.

3. Initial setup of the Measurement Receiver:

a. Reset the receiver by pressing the **Preset** key.

b. Press the **Freq** key, then select Frequency Span and enter 10 kHz.

c. Press the **BW** key, then select Manual and enter 10 Hz.

4. Setup the MG369xC as follows:

a. Press Edit F1 to open the current frequency parameter for editing.

b. Set F1 to the CW frequency indicated in the test record.

c. Press Edit L1 to open the current power level parameter for editing.

d. Set L1 to –40 dBm.

5. If measuring frequencies below 2400 MHz, connect the MG369xC RF Output directly to the measuring receiver's RF input and skip to Step 7.

Note	If using the T2579 mixer box, moving the cables is not required because the T2579 box automatically connects to the proper locations.

6. If measuring frequencies above 2400 MHz, connect the MG369xC RF Output to the mixer's R-input port and set up the LO as follows:

a. Press Edit F1 to open the current frequency parameter for editing.

b. Set F1 to the LO CW frequency indicated in the test record.

c. Set L1 based on frequencies list:

≤ 10 GHz leave the power at +13 dBm.

≥ 10 GHz but ≤ to 20 GHz set power to +12 dBm.

> 20 GHz set power to +6 dBm.

Note	When measuring frequencies above 2400 MHz, the LO, DUT, and measuring receiver should be connected to the mixer and the measuring receiver should be set to measure 8.51 MHz.

7. Set up the measuring receiver as follows:

a. Press the **Freq** key and enter the CW frequency listed in the test record.

b. Press the **Offset** key, select the offset valve, enter 0.

c. Read the measured value and calculate the line and mixer loss offset as follows:

(Test record reading at –40 dBm for the current test frequency) – Receiver Reading = Offset

The offset value should be a positive number.

d. Press the **Offset** key and select Offset On.

e. Select Offset Value and enter the offset value that was calculated above. The displayed reading on the measuring receiver should be the test record reading at –40 dBm for the current test frequency. If not, repeat steps b through e.

8. On the MG369xC, set L1 to the power level indicated in the test record starting with –55 dBm.

Note	When making power level changes greater than 15 dB, the first measurement should be thrown out to allow for the measuring receiver to auto range.

9. Measure the relative output power level and record the reading into the test records.

10. Repeat steps 8 and 9 for each of the test power levels listed in the test record for the current CW frequency.

Note	Depending on options and model numbers not all levels in the test records are tested. The lowest level measured is 100 dB below the maximum leveled power. In some cases measurement at or below -75 dBm is not required. Refer to the Technical Data Sheet for maximum leveled power specification and subtract 100 dB. This will determine the lowest value to measure.

11. Repeat Step 4 through Step 10 for all CW frequencies listed in the test record.

Note	Frequencies above 40 GHz are not measured using the calibrated receiver and mixer.

Power Level Flatness

Power level flatness is tested by measuring the output power level variation during a full band sweep in the manual sweep mode.

Note	For test settings and recording test data for this section refer to Appendix B, "Test Records (Standard Test Equipment)" starting on page B-65.

Test Setup

For all power level flatness measurements connect the equipment, shown in Figure 4-8 on page 4-19, as follows:

Caution	To prevent damage to the power sensor, use a fixed attenuator when measuring power levels above +19 dBm.

1. Calibrate the power meter with the appropriate power sensor.
2. Connect the power sensor to the RF Output of the MG369xC (use a fixed attenuator when measuring power levels above +19 dBm).
3. Connect the special AUX I/O interface cable (Anritsu Part No. 806-97) to the MG369xC rear panel AUX I/O connector. Connect the cable BNC connectors as follows:
   a. Connect the cable labeled "SEQ SYNC" to the power meter rear panel INPUT 1 DIGITAL connector.
   b. Connect the cable labeled "HORIZ OUT" to the power meter rear panel INPUT 2 ANALOG connector.
4. Set up the power meter as follows:
   a. Reset the power meter by pressing:

      System | Setup | -more- | PRESET | RESET
   b. Configure the power meter to perform power measurements by pressing:

      Sensor | Setup | MODE

      until Default is displayed.
   c. Configure the power sensor's calibration factor source by pressing:

      Sensor | CalFactor | SOURCE

      until V/GHZ is displayed.
   d. Setup the minimum V/GHz range by pressing:

      Setup| Start F

e. Enter the lower frequency of the MG369xC under test using the value in the frequency range column of the test record.

f. Setup the maximum V/GHz range by pressing:

Setup| Stop F

g. Enter the upper frequency of the MG369xC under test using the value in the frequency range column of the test record.

h. Press any hard key to begin the measurement.

Caution	To prevent damage to the power sensor, use a fixed attenuator when measuring power levels above +19 dBm.

Test Procedure

1. Set up the MG369xC as follows:

a. Reset the instrument by pressing **SYSTEM**, then Reset. The CW menu is displayed.

b. Press Manual Sweep to place the instrument in the manual sweep frequency mode and to display the Manual Sweep menu.

c. With the Manual Sweep menu displayed, press the Frequency Control soft key.

The Manual Sweep Frequency Control menu is then displayed.

The minimum or maximum frequencies are based on the power sensor performance, model, options installed, and specifications.

d. Press F1 - F2.

e. Press Edit F1 and enter the lower frequency of the MG369xC under test using the next frequency range value in the test record.

f. Press Edit F2 and enter the upper frequency of the MG369xC under test using the next frequency range value in the test record.

g. Press Edit L1 to open the current power level parameter for editing.

h. Set L1 to the power level indicated in the test record.

i. Return to the Manual Sweep menu by pressing the <Previous soft key.

j. At the Manual Sweep menu, press Number of Steps to open the number-of-steps parameter for editing.

k. Enter the number of steps called out in the test records.

l. Press the Frequency Control soft key.

Note	Be sure to use and calibrate the appropriate power sensor for the frequency being measured.

2. Using the rotary data knob, sweep the MG369xC through the frequency range. Measure the maximum and minimum power meter readings and record the variation (difference between the maximum and minimum readings) in the test record. Verify that the variation does not exceed the specification noted in the test record.

3. Setup the power meter for the next measurement.

a. Configure the power sensor's calibration factor source by pressing:

Sensor | CalFactor | SOURCE

until V/GHZ is displayed.

b. Setup the minimum V/GHz range by pressing:

Setup | Start F

c. Enter the lower frequency of the MG369xC under test using the next frequency range value in the test record.

d. Setup the maximum V/GHz range by pressing:

Setup | Stop F

e. Enter the upper frequency of the MG369xC under test using the next frequency range value in the test record.

f. Press any hard key to begin the measurement.

4. Repeat steps Step 1b through Step 3 until all tests are completed in the test record.

Maximum Leveled Power

Maximum leveled power is tested by measuring the output power level during a full band sweep in the manual sweep mode.

Note	For test settings and recording test data for this section refer to Appendix B, "Test Records (Standard Test Equipment)" starting on page B-69.

Test Setup

Note	To prevent damage to the power sensor, use a fixed attenuator when measuring power levels above +19 dBm.

1. Connect the equipment as shown in Figure 4-8 on page 4-19.
2. Calibrate the power meter with the appropriate power sensor.
3. Connect the power sensor to the RF Output of the MG369xC (use a fixed attenuator when measuring power levels above +19 dBm).
4. Connect the special AUX I/O interface cable (Anritsu PN: 806-97) to the MG369xC rear panel AUX I/O connector. Connect the cable BNC connectors as follows:
   a. Connect the cable labeled "SEQ SYNC" to the power meter rear panel INPUT 1 DIGITAL connector.
   b. Connect the cable labeled "HORIZ OUT" to the power meter rear panel INPUT 2 ANALOG connector.
5. Set up the power meter as follows:
   a. Reset the power meter by pressing:

      System | Setup | -more- | PRESET | RESET

   b. Configure the power meter to perform power measurements by pressing:

      Sensor | Setup | MODE

      until Default is displayed.
6. Configure the power sensor's calibration factor source by pressing:

   Sensor | CalFactor | SOURCE | V/GHz until V/GHZ is displayed

   a. Setup the minimum V/GHz range by pressing:

      Setup | Start F

      Enter the lower frequency of the MG369xC under test using the value in the frequency range column of the test record.

   b. Setup the maximum V/GHz range by pressing

Setup | Stop F

Enter the upper frequency of the MG369xC under test using the value in the frequency range column of the test record.

c. Press any hard key to begin the measurement.

Test Procedure

1. Set up the MG369xC for a manual sweep as follows:

a. Reset the instrument by pressing **SYSTEM**, then Reset. The CW menu is displayed.

b. Press Manual Sweep to place the instrument in the manual sweep frequency mode and to display the Manual Sweep menu.

c. With the Manual Sweep menu displayed, press the Frequency Control soft key.

d. The Manual Sweep Frequency Control menu is then displayed.

e. The minimum or maximum frequencies are based the power sensor performance, model, options installed, and specifications.

f. Press F1 - F2.

g. Press Edit F1, enter the lower frequency of the MG369xC under test using the next frequency range value in the test record.

h. Press Edit F2, enter the upper frequency of the MG369xC under test using the next frequency range value in the test record.

Note	Be sure to use and calibrate the appropriate power sensor for the frequency being measured.

i. Press Edit L1 to open the current power level parameter for editing.

j. Set L1 to the power level noted in the test record.

k. Return to the Manual Sweep menu by pressing the <Previous soft key.

l. On the Manual Sweep menu, press the Num of Steps soft key to open the number-of-steps parameter for editing.

m. Set the number-of-steps to 200.

n. Press the Frequency Control soft key.

2. Using the rotary data knob, sweep the MG369xC through the full frequency range. Measure the minimum power meter readings and record the values in the test record. Verify that the minimum readings exceed the value noted in the test record.

3. Setup the power meter for the next measurement.

a. Configure the power sensor's calibration factor source by pressing:

Sensor | CalFactor | SOURCE

until V/GHZ is displayed.

b. Setup the minimum V/GHz range by pressing:

Setup | Start F

c. Enter the lower frequency of the MG369xC under test using the next frequency range value in the test record.

d. Setup the maximum V/GHz range by pressing:

Setup | Stop F

e. Enter the upper frequency of the MG369xC under test using the next frequency range value in the test record.

f. Press any hard key to begin the measurement.

4. Repeat steps 1b through 3 until all tests are completed in the test record.

4-11 FM and ΦM Tests

This section provides a manual procedure to verify the performance of the frequency and phase modulation of the MG369xC.

The test methodology is the RF output of the MG369xC is modulated on and off while monitored on a spectrum analyzer display. The FM accuracy is determined by measuring the delta of Carrier Wave (FM/ΦM on and FM/ΦM off). This delta is converted to modulation index by applying Inverse Bessel Null, Taylor Series and Newton's Method for Finding Roots calculations. The modulation index is then converted to the actual deviation or dB. These tests quantify how the modulating input signal affects the signal generator's RF output.

Note	Before performing this procedure ensure that all test equipment is calibrated. Refer to the manufacturer's test equipment manual.

Note	For test settings and recording test data for this section, refer to Appendix B, "Test Records (Standard Test Equipment)" from page B-76 to page B-81

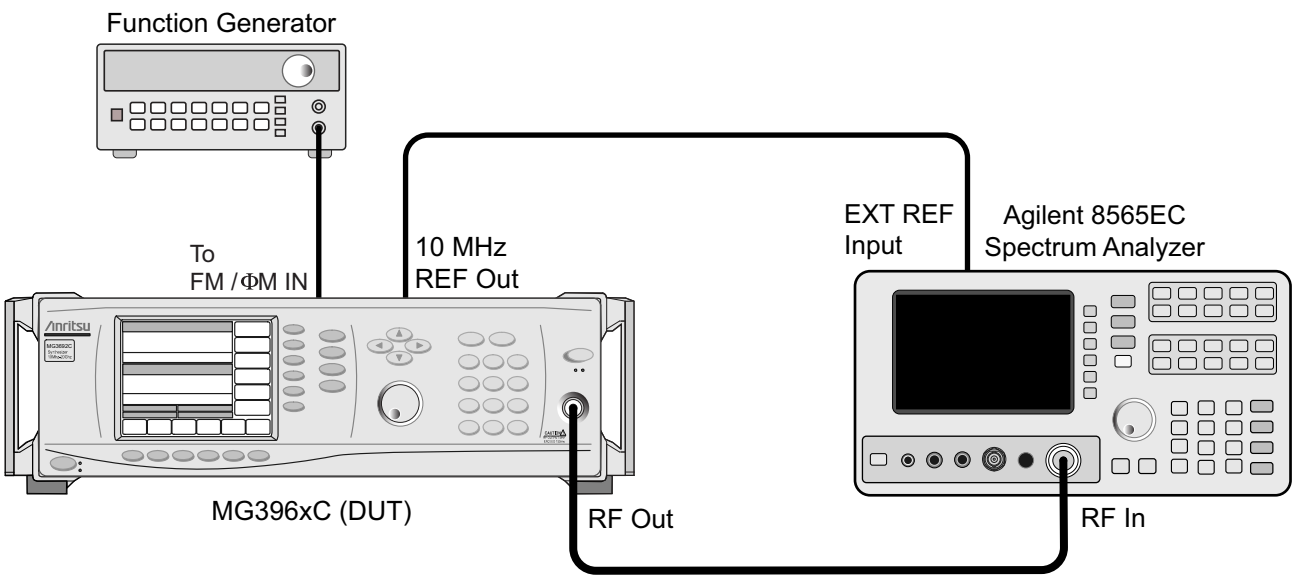

Figure 4-11. Equipment Setup for Frequency Modulation Tests

Initial Test Setup

Connect the equipment, shown in Figure 4-11, as follows:

1. Connect the MG369xC rear panel 10 MHz REF OUT to the spectrum analyzer's EXT REF IN.
2. Connect the RF OUTPUT of the MG369xC to the spectrum analyzer's RF input.
3. Connect the Function Generator output to the MG369xC's rear panel FM/ΦM IN connector.

Note	For many of the tests in this section, the Frequency and Phase Modulation measurements may be very small and difficult to detect. In many case, the spectrum analyzer amplitude scale should be set to 1 dB/division.

Locked FM Accuracy - Introduction

FM accuracy is verified at 5 GHz and 20 GHz in both the locked and locked low-noise modes of operation.

Locked External FM Accuracy at 5 GHz

1. Set up the test equipment as shown in Figure 4-11.
2. Set up the Function Generator as follows:
   a. Press the ∿ key to select the sine wave function.
   b. Press the **Freq** key and use the rotary knob to adjust the frequency output to 99.8 kHz.
   c. Press the **Ampl** key and use the rotary knob to adjust the amplitude to 2.0 Vp-p.
3. Set up the MG369xC as follows:
   a. Reset the instrument by pressing **SYSTEM**, then Reset. After reset, the CW menu is displayed.
   b. Press **Edit F1** to open the current frequency parameter for editing and set F1 to 5 GHz.
   c. Press the **Modulation** | FM | Internal/External keys to select external FM.
   d. Press Edit Sensitivity and set the sensitivity to 99.8 kHz/V.
4. Set up the spectrum analyzer as follows:
   a. Press the **PRESET** key to reset the instrument.
   b. Press **AUX CTRL**.
   c. Press Rear Panel soft key.
   d. Press 10 MHz soft key and set to “EXT”.
   e. Press the **FREQUENCY** key and enter 5 GHz.
   f. Press the **SPAN** key and enter 10 kHz.
   g. Press the **BW** key and set the RBW to 3 kHz and the VBW to 100 Hz.
   h. Press the **PEAK SEARCH** key.
5. Record the value on the spectrum analyzer as Vmodoff in the test records.
6. On the MG369xC, press On/Off to turn the locked FM mode on.
7. Record the value on the spectrum analyzer as Vmodon in the test records.
8. Using Table 4-3 on page 4-40 calculate modulation index to six decimal places. Record this value in the Test Record as “mod index”.
9. Calculate the following to three decimal places and record the results into the test record as FMerror%.

   FMerror% = ABS[((mod index × 99800) – 99800) / 99800]

Locked Low-Noise External FM Accuracy at 5 GHz

1. On the MG369xC, set Locked Low-Noise External FM mode on by pressing Mode>, then press Locked Low Noise.
2. Set up the spectrum analyzer as follows:
   a. Press the **BW** key and set the RBW to 3 kHz and the VBW to 100 Hz.
   b. Press the **PEAK SEARCH** key.
3. Record the value on the spectrum analyzer as Vmodon in the test records.
4. On the MG369xC, press previous then press On/Off to turn off the FM mode.
5. Record the value on the spectrum analyzer as Vmodoff in the test records.

6. Using Table 4-3 on page 4-40 calculate modulation index to six decimal places. Record this value in the Test Record as “mod index”.
7. Calculate the following to three decimal places and record the results into the test record as FMerror%.

   FMerror% = ABS[((mod index × 99800) – 99800) / 99800]

Locked External FM Accuracy at 20 GHz

1. Set up the MG369xC as follows:
   a. Press **Frequency** to open the current frequency parameter for editing.
   b. Set the frequency to 20 GHz, then to 2.3 GHz, then back to 20 GHz.
   c. Press **Modulation**, then press Mode> and select Locked.
   d. Press <Previous, ensure the locked external FM mode is off.
2. Set up the spectrum analyzer as follows:
   a. Press the **FREQUENCY** key and enter 20 GHz.
   b. Press the **BW** key and set the RBW to 3 kHz and the VBW to 30 Hz.
   c. Press the **PEAK SEARCH** key.
3. Record the value on the spectrum analyzer as Vmodoff in the test records.
4. On the MG369xC, press On/Off to turn on the FM mode.
5. Record the value on the spectrum analyzer as Vmodon in the test records.
6. Using Table 4-3 on page 4-40 calculate modulation index to six decimal places. Record this value in the Test Record as “mod index”.
7. Calculate the following to three decimal places and record the results into the test record as FMerror%.

   FMerror% = ABS[((mod index × 99800) – 99800) / 99800]

Locked Low-Noise External FM Accuracy at 20 GHz

1. On the MG369xC, select Locked Low Noise.
2. Set up the spectrum analyzer as follows:
   a. Press the **BW** key and set the RBW to 3 kHz and the VBW to 30 Hz.
   b. Press the **PEAK SEARCH** key.
3. Record the value on the spectrum analyzer as Vmodon in the test records.
4. On the MG369xC, press previous then press On/Off to turn on the FM mode off.
5. Record the value on the spectrum analyzer as Vmodoff in the test records.
6. Using Table 4-3 on page 4-40 calculate modulation index to six decimal places. Record this value in the Test Record as “mod index”.
7. Calculate the following to three decimal places and record the results into the test record as FMerror%.

   FMerror% = ABS[((mod index × 99800) – 99800) / 99800]

Locked Internal FM Accuracy at 5 GHz (Instruments with internal FM)

1. Disconnect the Function Generator from the MG369xC’s rear panel FM/ΦM IN connector.
2. Set up the MG369xC as follows:
   a. Reset the instrument by pressing **SYSTEM**, then Reset. After reset, the CW menu is displayed.
   b. Press Edit F1 to open the current frequency parameter for editing and set F1 to 5 GHz.
   c. Press the **Modulation** key, then press FM.

   d. Press Internal/External, to select the locked internal FM mode and ensure that the FM mode is off.
   e. Press Edit Rate and set it to 99.8 kHz.
   f. Press Edit Deviation and set it to 99.8 kHz.

3. Set up the spectrum analyzer as follows:
   a. Press **FREQUENCY** and set the center frequency to 5 GHz.
   b. Press the **BW** key and set the RBW to 3 kHz and the VBW to 100 Hz.
   c. Press the **PEAK SEARCH** key.

4. Record the value on the spectrum analyzer as Vmodoff in the test records.

5. On the MG369xC, press On/Off to turn the locked internal FM mode on.

6. Record the value on the spectrum analyzer as Vmodon in the test records.

7. Using Table 4-3 on page 4-40 calculate modulation index to six decimal places. Record this value in the Test Record as “mod index”.

8. Calculate the following to three decimal places and record the results into the test record as FMerror%.

FMerror% = ABS[((mod index × 99800) – 99800) / 99800]

Locked Low-Noise Internal FM Accuracy at 5 GHz (Instruments with internal FM)

1. On the MG369xC, press Mode> and select Locked Low Noise, then press <Previous.

2. Set up the spectrum analyzer as follows:
   a. Press the **BW** key and set the RBW to 3 kHz and the VBW to 100 Hz.
   b. Press the **PEAK SEARCH** key.

3. Record the value on the spectrum analyzer as Vmodon in the test records.

4. On the MG369xC, press previous, then press On/Off to turn on the FM mode off.

5. Record the value on the spectrum analyzer as Vmodoff in the test records.

6. Using Table 4-3 on page 4-40 calculate modulation index to six decimal places. Record this value in the Test Record as “mod index”.

7. Calculate the following to three decimal places and record the results into the test record as FMerror%.

FMerror% = ABS[((mod index × 99800) – 99800) / 99800]

Locked Internal FM Accuracy at 20 GHz (Instruments with internal FM)

1. Set up the MG369xC as follows:
   a. Press **Frequency** and set the frequency to 20 GHz, then 2.3 GHz, then back to 20 GHz.
   b. Press **Modulation**, then press Mode> and select Locked.
   c. Press <Previous, and confirm the FM mode is off.

2. Set up the spectrum analyzer as follows:
   a. Press **FREQUENCY** and set the center frequency to 20 GHz.
   b. Press the **BW** key and set the RBW to 3 kHz and the VBW to 30 Hz.
   c. Press the **PEAK SEARCH** key.

3. Record the value on the spectrum analyzer as Vmodoff in the test records.

4. On the MG369xC, press On/Off to turn the locked internal FM mode on.

5. Record the value on the spectrum analyzer as Vmodon in the test records.
6. Using Table 4-3 on page 4-40 calculate modulation index to six decimal places. Record this value in the Test Record as "mod index".
7. Calculate the following to three decimal places and record the results into the test record as FMerror%.

   FMerror% = ABS[((mod index × 99800) – 99800) / 99800]

Locked Low-Noise Internal FM Accuracy at 20 GHz (Instruments with internal FM)

1. On the MG369xC, press Mode> and select Locked Low Noise, then press <Previous.
2. Set up the spectrum analyzer as follows:
   a. Press the **BW** key and set the RBW to 3 kHz and the VBW to 30 Hz.
   b. Press the **PEAK SEARCH** key.
3. Record the value on the spectrum analyzer as Vmodon in the test records.
4. On the MG369xC, press previous then press On/Off to turn on the FM mode.
5. Record the value on the spectrum analyzer as Vmodoff in the test records.
6. Using Table 4-3 on page 4-40 calculate modulation index to six decimal places. Record this value in the Test Record as "mod index".
7. Calculate the following to three decimal places and record the results into the test record as FMerror%.

   FMerror% = ABS[((mod index × 99800) – 99800) / 99800]

ΦM Accuracy - Introduction

ΦM accuracy is verified at 5 GHz and 20 GHz in unlocked wide, unlocked narrow, locked, and locked low-noise for both external and internal modes of operation.

Note	For many of the tests in this section, the Frequency and Phase Modulation measurements may be very small and difficult to detect. In many cases, the spectrum analyzer amplitude scale should be set to 1 dB/division.

Wide External ΦM Accuracy at 5 GHz

1. Set up the test equipment as illustrated in Figure 4-11 on page 4-29.
2. Set up the Function Generator as follows:
   a. Press the ∿ key to select the sine wave function.
   b. Press the **Freq** key and use the rotary knob to adjust the frequency output to 99.8 kHz.
   c. Press the **Ampl** key and use the rotary knob to adjust the amplitude to 2.0 Vp-p.
3. Set up the MG369xC as follows:
   a. Reset the instrument by pressing **SYSTEM**, then Reset. After reset, the CW menu is displayed.
   b. Press Edit F1 to open the current frequency parameter for editing and set F1 to 5 GHz.
   c. Press the **Modulation** | ΦM | Internal/External keys to select external ΦM.
   d. Press Mode> and select Wide, then press <Previous.
   e. Press Edit Sensitivity and set the sensitivity to 1.00 rad/V.
4. Set up the spectrum analyzer as follows:
   a. Press the **PRESET** key to reset the instrument.
   b. Press **AUX CTRL**.

   c. Press the Rear Panel soft key.
   d. Press the 10MHz soft key and set to “EXT”.
   e. Press the **FREQUENCY** key and enter 5 GHz.
   f. Press the **SPAN** key and enter 10 kHz.
   g. Press the **BW** key and set the RBW to 3 kHz and the VBW to 100 Hz.
   h. Press the **PEAK SEARCH** key.
5. Record the value on the spectrum analyzer as Vmodoff in the test records.
6. On the MG369xC, press On/Off to turn the ΦM mode on.
7. Record the value on the spectrum analyzer as Vmodon in the test records.
8. Using Table 4-3 on page 4-40 calculate modulation index to six decimal places. Record this value in the Test Record as “mod index”.
9. Calculate the following to three decimal places and record the results into the test record as ΦMerror%.

   ΦMerror% = ABS[((mod index × 99800) – 99800) / 99800]

Narrow External ΦM Accuracy at 5 GHz

1. On the MG369xC, press Mode> and select Narrow, then press <Previous.
2. Set up the spectrum analyzer as follows:
   a. Press the **BW** key and set the RBW to 3 kHz and the VBW to 100 Hz.
   b. Press the **PEAK SEARCH** key.
3. Record the value on the spectrum analyzer as Vmodon in the test records.
4. On the MG369xC, press On/Off to turn the ΦM mode off.
5. Record the value on the spectrum analyzer as Vmodoff in the test records.
6. Using Table 4-3 on page 4-40 calculate modulation index to six decimal places. Record this value in the Test Record as “mod index”.
7. Calculate the following to three decimal places and record the results into the test record as ΦMerror%.

   ΦMerror% = ABS[((mod index × 99800) - 99800) / 99800]

Wide External ΦM Accuracy at 20 GHz

1. Set up the MG369xC as follows:
   a. Press **Frequency** and set the frequency to 20 GHz, then 2.3 GHz, then back to 20 GHz.
   b. Select Wide, then press <Previous.
   c. Press Edit Sensitivity and set the external ΦM sensitivity to 1.00 rad/V.
   d. Press On/Off to ensure the ΦM mode off.
2. Set up the spectrum analyzer as follows:
   a. Press **FREQUENCY** and set the center frequency to 20 GHz.
   b. Press the **BW** key and set the RBW to 3 kHz and the VBW to 30 Hz.
   c. Press the **PEAK SEARCH** key.
3. Record the value on the spectrum analyzer as Vmodoff in the test records.
4. On the MG369xC, press On/Off to turn the ΦM mode on.
5. Record the value on the spectrum analyzer as Vmodon in the test records.
6. Using Table 4-3 on page 4-40 calculate modulation index to six decimal places. Record this value in the Test Record as “mod index”.

7. Calculate the following to three decimal places and record the results into the test record as ΦMerror%.

   ΦMerror% = ABS[((mod index × 99800) – 99800) / 99800]

Narrow External ΦM Accuracy at 20 GHz

1. On the MG369xC, press Mode> and select Narrow, then press <Previous.
2. Set up the spectrum analyzer as follows:
   a. Press the **BW** key and set the RBW to 3 kHz and the VBW to 30 Hz.
   b. Press the **PEAK SEARCH** key.
3. Record the value on the spectrum analyzer as Vmodon in the test records.
4. On the MG369xC, press On/Off to turn the ΦM mode off.
5. Record the value on the spectrum analyzer as Vmodoff in the test records.
6. Using Table 4-3 on page 4-40 calculate modulation index to six decimal places. Record this value in the Test Record as "mod index".
7. Calculate the following to three decimal places and record the results into the test record as ΦMerror%.

   ΦMerror% = ABS[((mod index × 99800) – 99800) / 99800]

Wide Internal ΦM Accuracy 5 GHz (Instruments with internal ΦM)

1. Disconnect the Function Generator from the MG369xC's rear panel FM/ΦM IN connector.

   5. Set up the MG369xC as follows:
   a. Reset the instrument by pressing **SYSTEM**, then Reset. After reset, the CW menu is displayed.
   b. Press Edit F1 to open the current frequency parameter for editing and set F1 to 5 GHz.
   c. Press the **Modulation** | ΦM | Internal/External to select internal ΦM, then press On/Off to turn the locked internal ΦM mode off.
   d. Press Mode> and select Wide, then press <Previous.
   e. Press Edit Rate and set it to 99.8 kHz.
   f. Press Edit Deviation and set it to 1.00 rad.
2. Set up the spectrum analyzer as follows:
   a. Press **FREQUENCY** and set the center frequency to 5 GHz.
   b. Press the **BW** key and set the RBW to 3 kHz and the VBW to 100 Hz.
   c. Press the **PEAK SEARCH** key.
3. Record the value on the spectrum analyzer as Vmodoff in the test records.
4. On the MG369xC, press On/Off to turn the locked internal ΦM mode on.
5. Record the value on the spectrum analyzer as Vmodon in the test records.
6. Using Table 4-3 on page 4-40 calculate modulation index to six decimal places. Record this value in the Test Record as "mod index".
7. Calculate the following to three decimal places and record the results into the test record as ΦMerror%.

   ΦMerror% = ABS[((mod index × 99800) – 99800) / 99800]

Narrow Internal ΦM Accuracy at 5 GHz (Instruments with internal ΦM)

1. On the MG369xC, press Mode> and select Narrow, then press <Previous.
2. Set up the spectrum analyzer as follows:
   a. Press the **BW** key and set the RBW to 3 kHz and the VBW to 100 Hz.

   b. Press the **PEAK SEARCH** key.

3. Record the value on the spectrum analyzer as Vmodon in the test records.

4. On the MG369xC, press On/Off to turn the ΦM mode off.

5. Record the value on the spectrum analyzer as Vmodoff in the test records.

6. Using Table 4-3 on page 4-40 calculate modulation index to six decimal places. Record this value in the Test Record as "mod index".

7. Calculate the following to three decimal places and record the results into the test record as ΦMerror%.

ΦMerror% = ABS[((mod index × 99800) – 99800) / 99800]

Wide Internal ΦM Accuracy at 20 GHz (Instruments with internal ΦM)

1. Set up the MG369xC as follows:

   a. Press **Frequency** and set the frequency to 20 GHz, then to 2.3 GHz, then back to 20 GHz.

   b. Press **Modulation**, then press Mode> and select Wide.

   c. Press <Previous and set the ΦM deviation to 1.00 rad/V.

   d. Press On/Off to ensure the wide internal ΦM mode off.

2. Set up the spectrum analyzer as follows:

   a. Press **FREQUENCY** and set the center frequency to 20 GHz.

   b. Press the **BW** key and set the RBW to 3 kHz and the VBW to 30 Hz.

   c. Press the **PEAK SEARCH** key.

3. Record the value on the spectrum analyzer as Vmodoff in the test records.

4. On the MG369xC, press On/Off to turn the locked internal ΦM mode on.

5. Record the value on the spectrum analyzer as Vmodon in the test records.

6. Using Table 4-3 on page 4-40 calculate modulation index to six decimal places. Record this value in the Test Record as "mod index".

7. Calculate the following to three decimal places and record the results into the test record as ΦMerror%.

ΦMerror% = ABS[((mod index × 99800) – 99800) / 99800]

Narrow Internal ΦM Accuracy at 20 GHz (Instruments with internal ΦM)

1. On the MG369xC, press Mode> and select Narrow, then press <Previous.

2. Set up the spectrum analyzer as follows:

   a. Press the **BW** key and set the RBW to 3 kHz and the VBW to 30 Hz.

   b. Press the **PEAK SEARCH** key.

3. Record the value on the spectrum analyzer as Vmodon in the test records.

4. On the MG369xC, press On/Off to turn the ΦM mode off.

5. Record the value on the spectrum analyzer as Vmodoff in the test records.

6. Using Table 4-3 on page 4-40 calculate modulation index to six decimal places. Record this value in the Test Record as "mod index".

7. Calculate the following to three decimal places and record the results into the test record as ΦMerror%.

ΦMerror% = ABS[((mod index × 99800) – 99800) / 99800]

FM/ΦM Flatness and Bandwidth

The FM/ΦM flatness and bandwidth tests verify that theMG369xC's modulated RF output meets specification while in the locked FM mode and in the narrow and wide ΦM modes.

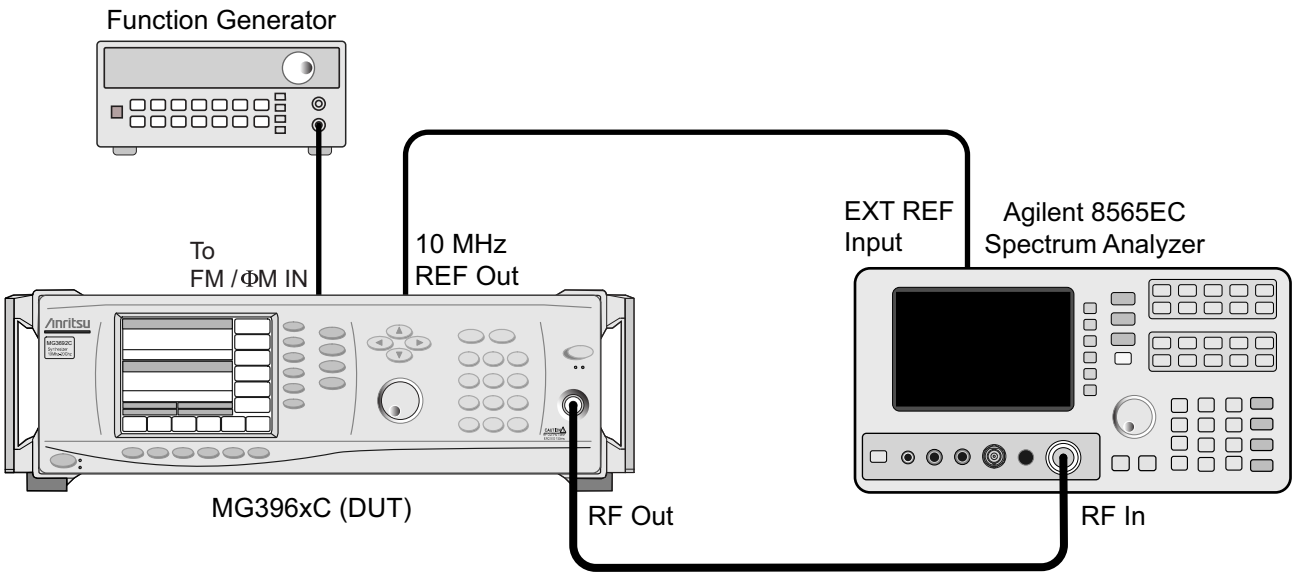

Figure 4-12. Equipment Setup for Frequency/Phase Modulation Flatness and Bandwidth Tests

Initial Test Setup

Set up the equipment, shown in Figure 4-12, as follows:

1. Connect the RF Output of the MG369xC to the RF input of the spectrum analyzer.
2. Connect the 10 MHz REF OUT of the MG369xC to the 10 MHz reference input of the spectrum analyzer.
3. Connect the Output port of the Function Generator to the FM/ΦM IN connector of the MG369xC.

Note	Since a potential spur exists at 100 kHz which could affect accuracy, the measurement is performed with the Function Generator set to 99.8 kHz.

Locked FM Flatness

1. Connect the equipment as shown in Figure 4-12.
2. Set up the MG369xC as follows:
   - **a.** Reset the instrument by pressing **SYSTEM**, then Reset. After reset, the CW menu is displayed.
   - **b.** Press Edit F1 to open the current frequency parameter for editing and set F1 to 5 GHz.
   - **c.** Press **Modulation** | FM | Internal/External to select external FM.
   - **d.** Press Edit Sensitivity and set it to 99.8 kHz/V.
3. Set up the spectrum analyzer as follows:
   - **a.** Press the **PRESET** key to reset the instrument.
   - **b.** Press **AUX CTRL**.
   - **c.** Press the Rear Panel soft key.
   - **d.** Press the 10MHz soft key and set to "EXT".

   e. Press the **FREQUENCY** key and enter 5 GHz.
   f. Press the **SPAN** key and enter 10 kHz.
   g. Press the **AMPLITUDE** key, then press LOG dB/DIV and enter 1 dB.
   h. Press the **BW** key and set the RBW to 3 kHz and the VBW to 10 Hz.
   i. Press **PEAK SEARCH**.

4. Set up the Function Generator as follows:
   a. Press the ∿ key to select the sine wave function.
   b. Press the **Freq** key and use the rotary knob to adjust the frequency output to 99.8 kHz.
   c. Press the **Ampl** key and press the green **Enter Number** key and enter 2 Vp-p.
5. Observe the trace on the spectrum analyzer. It should be just below the top of the screen at about 0 dBm or lower depending on cable loss.
6. Record the value on the spectrum analyzer as Vmodoff in the test records.
7. On the MG369xC, press On/Off to turn the FM mode on. The level on the spectrum analyzer should fall significantly.
8. Record the value on the spectrum analyzer as Vmodon in the test records.
9. Using Table 4-3 on page 4-40 calculate modulation index to six decimal places. Record this value in the Test Record as “mod index”.
10. On the MG369xC, press On/Off to turn the FM mode off.
11. Repeat steps 6 through 11 for each of the Function Generator frequency and MG369xC FM sensitivity pairs listed in the test record.
12. Calculate the FM flatness by comparing each of the Vmodon values from the Vmodon value at the 100 kHz rate by calculate the following to three decimal places and record the results into the test record as FMflat.

    FMflat = 20log((mod index @ 99.8 kHz) / (mod index @ X Hz))

Narrow ΦM Flatness

1. Connect the equipment as shown in Figure 4-12.
2. Set up the MG369xC as follows:
   a. Reset the instrument by pressing **SYSTEM**, then Reset. After reset, the CW menu is displayed.
   b. Press Edit F1 to open the current frequency parameter for editing and set F1 to 5 GHz.
   c. Press **Modulation** | ΦM | Internal/External to select external ΦM.
   d. Press Mode> | Narrow | <Previous to select the narrow ΦM mode and return to the External ΦM Status menu.
   e. Press Edit Sensitivity and set it to 1.00 rad/V.
3. Set up the spectrum analyzer as follows:
   a. Press the **PRESET** key to reset the instrument.
   b. Press **AUX CTRL**.
   c. Press the Rear Panel soft key.
   d. Press the 10MHz soft key and set it to “EXT”.
   e. Press the **FREQUENCY** key and enter 5 GHz.
   f. Press the **SPAN** key and enter 10 kHz.
   g. Press the **AMPLITUDE** key then press the LOG dB/DIV and enter 1 dB.

   h. Press the **BW** key and set the RBW to 3 kHz and the VBW to 10 Hz.

   i. Press **PEAK SEARCH**.

4. Set up the Function Generator as follows:

   a. Press the ∿ key to select the sine wave function.

   b. Press the **Freq** key and use the rotary knob to adjust the frequency output to 98.8 kHz.

5. Press the **Ampl** key and use the rotary knob to adjust the amplitude to 2.0 Vp-p.

Note	Since a potential spur exists at 100 kHz, which could affect accuracy, the measurement is performed with the Function Generator set to 99.8 kHz.

6. Observe the trace on the spectrum analyzer. It should be just below the top of the screen at about 0 dBm or lower depending on the cable loss.

7. Record the value on the spectrum analyzer as Vmodoff in the test records.

8. On the MG369xC, press On/Off to turn the ΦM mode on. The level on the spectrum analyzer should fall significantly.

9. Record the value on the spectrum analyzer as Vmodon in the test records.

10. Using Table 4-3 on page 4-40 calculate modulation index to six decimal places. Record this value in the Test Record as “mod index”.

11. On the MG369xC, press On/Off to turn the ΦM mode off.

12. Repeat steps 6 through 11 for each of the Function Generator frequency and MG369xC ΦM sensitivity pairs listed in the test record.

13. Calculate the ΦM flatness by comparing each of the Vmodon values from the Vmodon value at the 100 kHz rate by calculating the following to three decimal places and record the results into the test record as ΦMflat.

   ΦMflat = 20log((mod index @ 99.8 kHz) / (mod index @ X Hz))

Wide ΦM Flatness

1. Connect the equipment as shown in Figure 4-12.

2. Set up the MG369xC as follows:

   a. Reset the instrument by pressing **SYSTEM**, then Reset. After reset, the CW menu is displayed.

   b. Press Edit F1 to open the current frequency parameter for editing and set F1 to 5 GHz.

   c. Press **Modulation** | ΦM | Internal/External to select external ΦM.

   d. Press Mode> | Wide | <Previous to select the wide ΦM mode and return to the External ΦM Status menu.

   e. Press Edit Sensitivity and set it to 1.00 rad/V.

3. Set up the spectrum analyzer as follows:

   a. Press the **PRESET** key to reset the instrument.

   b. Press **AUX CTRL**.

   c. Press the Rear Panel soft key.

   d. Press the 10MHz soft key and set it to “EXT”.

   e. Press the **FREQUENCY** key and enter 5 GHz.

   f. Press the **SPAN** key and enter 10 kHz.

   g. Press the **AMPLITUDE** key then press LOG dB/DIV and enter 1 dB.

   h. Press the **BW** key and set the RBW to 3 kHz and the VBW to 100 Hz.

i. Press **PEAK SEARCH**.

4. Set up the Function Generator as follows:
   a. Press the ∿ key to select the sine wave function.
   b. Press the **Freq** key and use the rotary knob to adjust the frequency output to 99.8 kHz.
   c. Press the **Ampl** key and use the rotary knob to adjust the amplitude to 2.0 Vp-p.

Note	Since a potential spur exists at 100 kHz, which could affect accuracy, the measurement is performed with the Function Generator set to 99.8 kHz.

5. Observe the trace on the spectrum analyzer. It should be just below the top of the screen at about 0 dBm or lower depending on the cable loss.
6. Record the value on the spectrum analyzer as Vmodoff in the test records.
7. On the MG369xC, press On/Off to turn the ΦM mode on. The level on the spectrum analyzer should fall significantly.
8. Record the value on the spectrum analyzer as Vmodon in the test records.
9. Using Table 4-3 on page 4-40 calculate modulation index to six decimal places. Record this value in the Test Record as “mod index”.
10. On the MG369xC, press On/Off to turn the ΦM mode off.
11. Repeat steps 6 through 11 for each of the Function Generator frequency and MG369xC ΦM sensitivity pairs listed in the test record.
12. Calculate the ΦM flatness by comparing each of the Vmodon values from the Vmodon value at the 100 kHz rate by calculate the following to three decimal places and record the results into the test record as ΦMflat.

    ΦMflat = 20log((mod index @ 99.8 kHz) / (mod index @ X Hz))

Modulation Index Calculations

The modulation index calculation was developed using a Taylor series and Newtons method and is used to find the root of the Bessel function. The calculation is in the table below.

Note	The following table is available as a link from the electronic version of this document as a text file (modulation_index_calculations.txt) or an Excel file (modulation_index_calculations.xls). These files are also available from the Anritsu Company web site as part of the MG369xC Maintenance Manual download.

Table 4-3. Modulation Index Calculations (1 of 2)

Vmodon = dBm measurement of the CW with Modulation on
Vmodoff = dBm measurement of the CW with Modulation off
Constant_A= 1
RESULT_FINAL = Modulation Index
RESULT_1 = CONSTANT_A-(1-CONSTANT_A^2/4+CONSTANT_A^4/64-CONSTANT_A^6/2304+CONSTANT_A^8/147456-CONSTANT_A^10/14745600-10^((Vmodon-Vmodoff)/20))/(-CONSTANT_A/2+CONSTANT_A^3/16-CONSTANT_A^5/384+CONSTANT_A^7/18432-CONSTANT_A^9/1474560)
RESULT_2 = RESULT_1-(1-RESULT_1^2/4+RESULT_1^4/64-RESULT_1^6/2304+RESULT_1^8/147456-RESULT_1^10/14745600-10^((Vmodon-Vmodoff)/20))/(-RESULT_1/2+RESULT_1^3/16-RESULT_1^5/384+RESULT_1^7/18432-RESULT_1^9/1474560)

Table 4-3. Modulation Index Calculations (2 of 2)

RESULT_3 = RESULT_2-(1-RESULT_2^2/4+RESULT_2^4/64-RESULT_2^6/2304+RESULT_2^8/147456-RESULT_2^10/14745600-10^((Vmodon-Vmodoff)/20))/(-RESULT_2/2+RESULT_2^3/16-RESULT_2^5/384+RESULT_2^7/18432-RESULT_2^9/1474560)
RESULT_4 = RESULT_3-(1-RESULT_3^2/4+RESULT_3^4/64-RESULT_3^6/2304+RESULT_3^8/147456-RESULT_3^10/14745600-10^((Vmodon-Vmodoff)/20))/(-RESULT_3/2+RESULT_3^3/16-RESULT_3^5/384+RESULT_3^7/18432-RESULT_3^9/1474560)
RESULT_5 = RESULT_4-(1-RESULT_4^2/4+RESULT_4^4/64-RESULT_4^6/2304+RESULT_4^8/147456-RESULT_4^10/14745600-10^((Vmodon-Vmodoff)/20))/(-RESULT_4/2+RESULT_4^3/16-RESULT_4^5/384+RESULT_4^7/18432-RESULT_4^9/1474560)
RESULT_6 = RESULT_5-(1-RESULT_5^2/4+RESULT_5^4/64-RESULT_5^6/2304+RESULT_5^8/147456-RESULT_5^10/14745600-10^((Vmodon-Vmodoff)/20))/(-RESULT_5/2+RESULT_5^3/16-RESULT_5^5/384+RESULT_5^7/18432-RESULT_5^9/1474560)
RESULT_7 = RESULT_6-(1-RESULT_6^2/4+RESULT_6^4/64-RESULT_6^6/2304+RESULT_6^8/147456-RESULT_6^10/14745600-10^((Vmodon-Vmodoff)/20))/(-RESULT_6/2+RESULT_6^3/16-RESULT_6^5/384+RESULT_6^7/18432-RESULT_6^9/1474560)
RESULT_8 = RESULT_7-(1-RESULT_7^2/4+RESULT_7^4/64-RESULT_7^6/2304+RESULT_7^8/147456-RESULT_7^10/14745600-10^((Vmodon-Vmodoff)/20))/(-RESULT_7/2+RESULT_7^3/16-RESULT_7^5/384+RESULT_7^7/18432-RESULT_7^9/1474560)
RESULT_9 = RESULT_8-(1-RESULT_8^2/4+RESULT_8^4/64-RESULT_8^6/2304+RESULT_8^8/147456-RESULT_8^10/14745600-10^((Vmodon-Vmodoff)/20))/(-RESULT_8/2+RESULT_8^3/16-RESULT_8^5/384+RESULT_8^7/18432-RESULT_8^9/1474560)
RESULT_10 = RESULT_9-(1-RESULT_9^2/4+RESULT_9^4/64-RESULT_9^6/2304+RESULT_9^8/147456-RESULT_9^10/14745600-10^((Vmodon-Vmodoff)/20))/(-RESULT_9/2+RESULT_9^3/16-RESULT_9^5/384+RESULT_9^7/18432-RESULT_9^9/1474560)
RESULT_11 = RESULT_10-(1-RESULT_10^2/4+RESULT_10^4/64-RESULT_10^6/2304+RESULT_10^8/147456-RESULT_10^10/14745600-10^((Vmodon-Vmodoff)/20))/(-RESULT_10/2+RESULT_10^3/16-RESULT_10^5/384+RESULT_10^7/18432-RESULT_10^9/1474560)
RESULT_12 = RESULT_11-(1-RESULT_11^2/4+RESULT_11^4/64-RESULT_11^6/2304+RESULT_11^8/147456-RESULT_11^10/14745600-10^((Vmodon-Vmodoff)/20))/(-RESULT_11/2+RESULT_11^3/16-RESULT_11^5/384+RESULT_11^7/18432-RESULT_11^9/1474560)
RESULT_13 = RESULT_12-(1-RESULT_12^2/4+RESULT_12^4/64-RESULT_12^6/2304+RESULT_12^8/147456-RESULT_12^10/14745600-10^((Vmodon-Vmodoff)/20))/(-RESULT_12/2+RESULT_12^3/16-RESULT_12^5/384+RESULT_12^7/18432-RESULT_12^9/1474560)
RESULT_FINAL = RESULT_13-(1-RESULT_13^2/4+RESULT_13^4/64-RESULT_13^6/2304+RESULT_13^8/147456-RESULT_13^10/14745600-10^((Vmodon-Vmodoff)/20))/(-RESULT_13/2+RESULT_13^3/16-RESULT_13^5/384+RESULT_13^7/18432-RESULT_13^9/1474560)

Unlocked Narrow FM Accuracy

The unlocked narrow FM accuracy procedure measures the FM accuracy in unlocked narrow FM mode.

Note	For test settings and recording test data for this section, refer to page B-81 in Appendix B, "Test Records (Standard Test Equipment)".

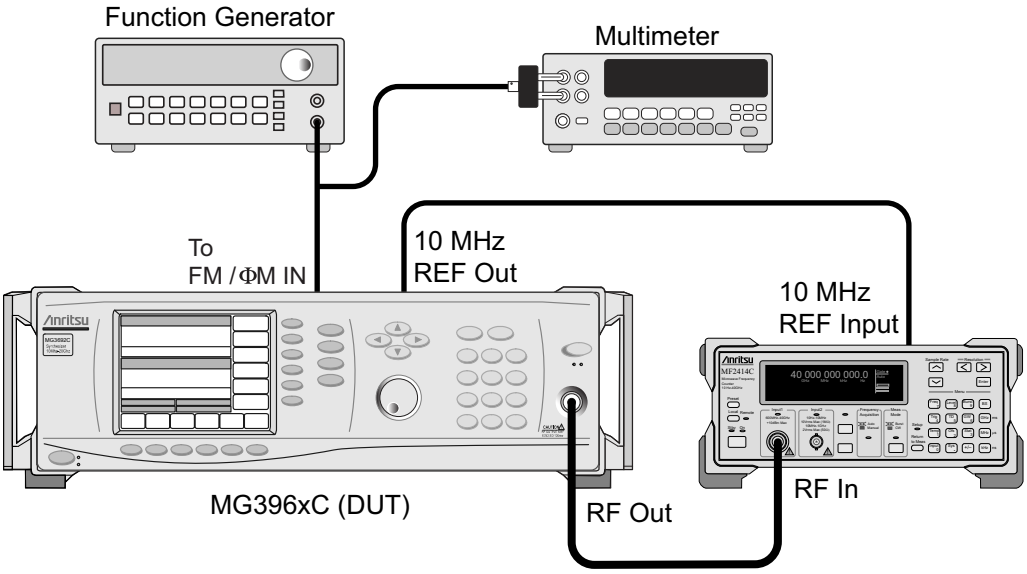

Figure 4-13. Equipment Setup for FM Accuracy Test in Unlocked Narrow Mode

Test Setup

Set up the equipment, shown in Figure 4-13, as follows:

1. Connect the RF Output of the MG369xC to Input 1 of the frequency counter.
2. Connect the 10 MHz REF OUT of the MG369xC to the 10 MHz reference input of the frequency counter.
3. Using a BNC tee, connect the output port of the Function Generator to the input of the multimeter and to the ΦM/FM IN connector of the MG369xC.
4. On the frequency counter, press **Preset**. Verify that the key parameters are set as follows:

   Measurement mode: CW / CW

   Resolution: 100 Hz / 100 Hz

   Sample rate: 100 ms / 100 ms

   Gate width value: 100 ms / 100 ms

   Gate end: Off / Off

Test Procedure

The following procedure lets you verify the external FM accuracy of the MG369xC's RF output.

1. Set up the MG369xC as follows:
   a. Reset the instrument by pressing **SYSTEM**, then Reset. After reset, the CW menu is displayed.
   b. Press Edit F1 to open the current frequency parameter for editing and set F1 to 5.0 GHz.
   c. Press **Modulation** | FM | Internal/External to select external FM.
   d. Set the FM mode to unlocked narrow by pressing Mode> | Unlocked Narrow, then press <Previous to return to the External FM Status menu.

e. Set the sensitivity to 10 MHz/V by pressing Edit Sensitivity and enter 10 MHz.

f. Turn the external FM mode on by pressing On/Off.

2. Set up the Function Generator as follows:

a. Power cycle the function generator to ensure it is in the default state (1 kHz sine wave, 100 mV peak-to-peak, 50 ohm termination).

b. Press the **OFFSET** key and hold it down for more than 2 seconds. This action will put the Function Generator into VDC mode.

c. Rotate the knob to adjust the value until +1V DC is measured on the multimeter.

3. Disconnect the +1V DC signal from the MG369xC's FM/ΦM IN connector.

4. Record the frequency counter's displayed frequency to the fourth decimal place (for example, 4.9982 GHz) in the test record as FMref.

5. Reconnect the +1V DC signal to the MG369xC's FM/ΦM IN connector.

6. Record the frequency counter's displayed frequency to the fourth decimal place (for example, 5.0082 GHz) in the test record as FMmod.

7. Calculate the FM accuracy error (FMerr) and record the result in the test record as follows:

$$FM_{err} = \left[1 - \left(\frac{FM_{mod} - FM_{ref}}{0.010}\right)\right] \times 100$$

4-12 Amplitude Modulation Tests

This procedure verifies the operation of the MG369xC amplitude modulation input sensitivity circuits. The modulated RF output of the MG369xC is down converted and the (modulated) IF is then measured with a modulation analyzer. The actual modulation values are then computed from the modulation analyzer readings. (The absolute AM PK+ and AM PK– readings are used in the given procedures to compensate for non-linearity errors in the test equipment.

Note	Before performing this procedure ensure that all test equipment is calibrated. Refer to the manufacturer's test equipment manual.

Note	For test settings and recording test data for this section, refer to Appendix B, "Test Records (Standard Test Equipment)" from page B-82 to page B-85

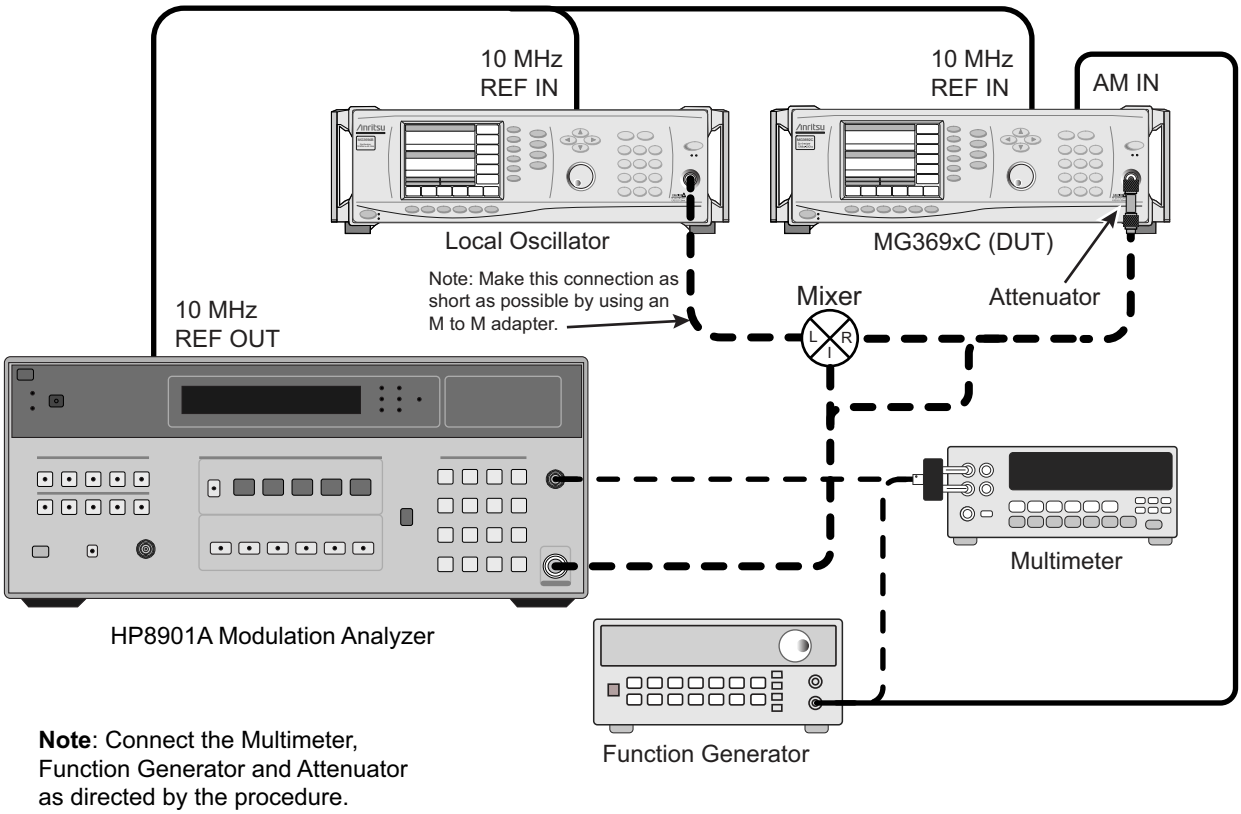

Figure 4-14. Equipment Setup for Amplitude Modulation Tests

Test Setup

Connect the equipment, shown in Figure 4-14, as follows:

1. Using a BNC tee, connect the rear panel 10 MHz reference output of the modulation analyzer to the MG369xC's and local oscillator's 10 MHz REF IN connectors.
2. Connect the RF output of the MG369xC to the modulation analyzer's RF input.
3. Using a BNC tee, connect the Function Generator output to the AM IN connector of the MG369xC and to the multimeter input.

External AM Accuracy

The following procedure lets you measure the absolute peak external AM values for a 50% AM signal at 6 dB below maximum rated output power and calculate the modulation index.

1. Set up the MG369xC as follows:
   - **a.** Reset the instrument by pressing **SYSTEM**, then Reset. After reset, the CW menu is displayed.
   - **b.** Press Edit F1 to open the current frequency parameter for editing.
   - **c.** Set F1 to the first/next applicable DUT frequency listed in the test record.
   - **d.** Press Edit L1 to open the current level parameter for editing.
   - **e.** Set L1 to 6 dB below the maximum rated leveled power for the full band (lowest of the maximum rated power levels) for the instrument being tested (refer to Appendix B, Technical Data Sheet). Specifications).
   - **f.** Press **Modulation**, AM, then Internal/External to select external AM, then set on/off to on.
   - **g.** Press Log/Linear to select linear modulation.
   - **h.** Press Edit Sensitivity and set the AM sensitivity to 50%.
2. Connect the attenuator to the DUT RF output for the following output power conditions:

   L1 < 0 dBm, install a 6 dB attenuation PAD

   0 dBm < L1 ≤ 3 dBm, install a 10 dB attenuation PAD

   3 dBm < L1 ≤ 13 dBm, install a 20 dB attenuation PAD

   13 dBm < L1 ≤ 20 dBm, install a 26 dB attenuation PAD
3. Set up the local oscillator as follows (the local oscillator is not required on the first frequency measured):
   - **a.** Reset the instrument by pressing **System**, then Reset. After reset, the CW menu is displayed.
   - **b.** Press Edit F1 to open the current frequency parameter for editing.
   - **c.** Set F1 to the first/next applicable LO frequency listed in the test record.
   - **d.** Press Edit L1 to open the current level parameter for editing and set L1 to +6 dBm.
4. Set the multimeter to measure an AC signal by pressing V AC, then Auto.
5. Set up the Function Generator as follows:
   - **a.** Press the ∿ (sine wave) key, then the **Freq** key and adjust the frequency to 1 kHz using the rotary knob.
   - **b.** Press the **Ampl** key and adjust the voltage to 0.7071 V_{rms} using the rotary knob (read the voltage on the multimeter).
6. Set up the modulation analyzer as follows:
   - **a.** Press the HP Filter 300 Hz key to set the high pass filter to 300 Hz.
   - **b.** Press the LP Filter 15 kHz key to set the low pass filter to 15 kHz.
   - **c.** Press AM, PK+, then PEAK HOLD to obtain a positive peak AM reading (Pk1).
   - **d.** Press AM, PK–, then PEAK HOLD to obtain a negative peak AM reading (Pk2).
7. Calculate the modulation index (M) from the above values as follows:

$$M = \frac{Pk1 + Pk2}{200 + Pk1 - Pk2} \times 100$$

8. Record the calculated result as M in the test record.
9. Connect the RF output of the local oscillator and the MG369xC to the mixer's L- and R-ports, respectively, then connect the IF output of the mixer to the modulation analyzer's RF input.

10. Repeat the measurement for each of the local oscillator and MG369xC CW frequency pairs listed in the test record.

Internal AM Accuracy

The following procedure (only for instruments with internal AM) lets you measure the absolute peak internal AM values for a 50% AM signal at 6 dB below maximum rated output power and calculate the modulation index.

Test Setup

Connect the equipment, shown in Figure 4-14, as follows:

1. Using a BNC tee, connect the rear panel 10 MHz reference output of the modulation analyzer to the MG369xC's and local oscillator's 10 MHz REF IN connectors.
2. Connect the RF output of the MG369xC to the modulation analyzer's RF input.
3. Using a BNC tee, connect the Function Generator output to the AM IN connector of the MG369xC and to the multimeter input.

Test Procedure

1. Set up the MG369xC as follows:
   a. Reset the instrument by pressing **SYSTEM**, then Reset. After reset, the CW menu is displayed.
   b. Press Edit F1 to open the current frequency parameter for editing.
   c. Set F1 to the first/next applicable frequency in the test record.
2. Connect attenuation PAD to the DUT RF output for the following output power conditions:

   L1 < 0 dBm, install a 6 dB attenuation PAD

   0 dBm < L1 ≤ 3 dBm, install a 10 dB attenuation PAD

   3 dBm < L1 ≤ 13 dBm, install a 20 dB attenuation PAD

   13 dBm < L1 ≤ 20 dBm, install a 26 dB attenuation PAD
3. Set up the MG369xC as follows:
   a. Press Edit L1 to open the current level parameter for editing.
   b. Set L1 to 6 dB below the maximum rated leveled power for the full band (lowest of the maximum rated power levels) for the instrument being tested (refer to Appendix B, Technical Data Sheet).
   c. Press **Modulation**, AM, then Internal/External to select internal AM, then set on/off to on.
   d. Press Log/Linear to select linear modulation.
   e. Press Edit Depth and set the AM depth to 50%.
   f. Press Edit Rate and set the AM rate to 1 kHz.
4. Set up the local oscillator as follows (the local oscillator is not required on the first frequency measured):
   a. Reset the instrument by pressing **System**, then Reset. After reset, the CW menu is displayed.
   b. Press Edit F1 to open the current frequency parameter for editing.
   c. Set F1 to the first/next applicable LO frequency listed in the test record.
   d. Press Edit L1 to open the current level parameter for editing and set L1 to +6 dBm.
5. Disconnect the Function Generator from the MG369xC's AM IN connector.
6. Set up the modulation analyzer as follows:
   a. Press the HP Filter 300 Hz key to set the high pass filter to 300 Hz.
   b. Press the LP Filter 15 kHz key to set the low pass filter to 15 kHz.
   c. Press AM, PK+, then PEAK HOLD to obtain a positive peak AM reading (Pk1).

   d. Press AM, PK–, then PEAK HOLD to obtain a negative peak AM reading (Pk2).

7. Calculate the modulation index (M) from the above values as follows:

$$M = \frac{Pk1 + Pk2}{200 + Pk1 - Pk2} \times 100$$

8. Record the calculated result as M in the test record.

9. Connect the RF output of the local oscillator and the MG369xC to the mixer's L- and R-ports, respectively, then connect the IF output of the mixer to the modulation analyzer's RF input.

10. Repeat the measurement for each of the local oscillator and MG369xC CW frequency pairs listed in the test record.

AM Roll Off

The following procedure lets you measure the AM roll off of the external AM signal at 6 dB below maximum rated output power.

Test Setup

Connect the equipment, shown in Figure 4-14, as follows:

1. Using a BNC tee, connect the rear panel 10 MHz reference output of the modulation analyzer to the MG369xC's and local oscillator's 10 MHz REF IN connectors.

2. Connect the RF output of the MG369xC to the modulation analyzer's RF input.

3. Using a BNC tee, connect the Function Generator output to the AM IN connector of the MG369xC and to the multimeter input.

4. Setup for the modulation Analyzer:

   a. Turn off all HP filters.

   b. Turn off all LP filters.

Test Procedure

1. Set up the MG369xC as follows:

   a. Reset the instrument by pressing **SYSTEM**, then Reset. After reset, the CW menu is displayed.

   b. Press Edit F1 to open the current frequency parameter for editing.

   c. Set F1 to the first/next applicable DUT frequency listed in the test record.

2. Connect attenuation PAD to the DUT RF output for the following output power conditions:

   L1 < 0 dBm, install a 6 dB attenuation PAD

   0 dBm < L1 ≤ 3 dBm, install a 10 dB attenuation PAD

   3 dBm < L1 ≤ 13 dBm, install a 20 dB attenuation PAD

   13 dBm < L1 ≤ 20 dBm, install a 26 dB attenuation PAD

3. Set up the MG369xC as follows:

   a. Press Edit L1 to open the current level parameter for editing.

   b. Set L1 to 6 dB below the maximum rated leveled power for the full band (lowest of the maximum rated power levels) for the instrument being tested (refer to Appendix B, Technical Data Sheet).

   c. Press **Modulation**, AM, then Internal/External to select external AM, then set on/off to on.

   d. Press Log/Linear to select linear modulation.

   e. Press Edit Sensitivity and set the AM sensitivity to 50%.

4. Connect attenuation PAD to the DUT RF output for the following output power conditions:

   L1 < 0 dBm, install a 6 dB attenuation PAD

0 dBm < L1 ≤ 3 dBm, install a 10 dB attenuation PAD

3 dBm < L1 ≤ 13 dBm, install a 20 dB attenuation PAD

13 dBm < L1 ≤ 20 dBm, install a 26 dB attenuation PAD

5. Set up the local oscillator as follows (the local oscillator is not required on the first frequency measured):

- **a.** Reset the instrument by pressing **System**, then Reset. After reset, the CW menu is displayed.
- **b.** Press Edit F1 to open the current frequency parameter for editing.
- **c.** Set F1 to the first/next applicable LO frequency listed in the test record.
- **d.** Press Edit L1 to open the current level parameter for editing and set L1 to +6 dBm.

6. Set the multimeter to measure an AC signal by pressing V AC, then Auto.

7. Set up the Function Generator as follows:

- **a.** Press the ∿ (sine wave) key, then the **Freq** key and adjust the frequency to 1 kHz using the rotary knob.
- **b.** Press the **Ampl** key and adjust the voltage to 0.7071 V_{rms} with the rotary knob (read the voltage on the multimeter).

8. Disconnect the Multimeter. Then connect the multimeter to the modulation analyzer's demodulated output port and press **AM** on the modulation analyzer.

9. Record the multimeter's AC voltage value as V_1 in the test record.

10. Set the Function Generator to 50 kHz and record the multimeter's AC voltage value as V_{50} in the test record.

11. Calculate the AM roll off and record the result in the test record as AMro using the following equation:

$$AM_{ro} = 20 \times \log\left(\frac{V_{50}}{V_1}\right)$$

12. Disconnect the multimeter. Using a BNC tee, connect the Function Generator output to the AM IN connector of the MG369xC and to the multimeter input.

13. Connect the RF output of the local oscillator and the MG369xC to the mixer's L- and R-ports, respectively, then connect the IF output of the mixer to the modulation analyzer's RF input.

14. Repeat steps 5 through 10 for each of the MG369xC and local oscillator CW frequency pairs listed in the test record.

AM Flatness

The following procedure lets you measure the AM flatness of the external AM signal at 6 dB below maximum rated output power from 10 Hz to 10 kHz rates.

Test Setup

Connect the equipment, shown in Figure 4-14, as follows:

1. Using a BNC tee, connect the rear panel 10 MHz reference output of the modulation analyzer to the MG369xC's and local oscillator's 10 MHz REF IN connectors.
2. Connect the RF output of the MG369xC to the modulation analyzer's RF input.
3. Using a BNC tee, connect the Function Generator output to the AM IN connector of the MG369xC and to the multimeter input.

Test Procedure

1. Set up the MG369xC as follows:
   - **a.** Reset the instrument by pressing **SYSTEM**, then Reset. After reset, the CW menu is displayed.
   - **b.** Press Edit F1 to open the current frequency parameter for editing.
   - **c.** Set F1 to the first/next applicable DUT frequency listed in the test record.
   - **d.** Press Edit L1 to open the current level parameter for editing.
   - **e.** Set L1 to 6 dB below the maximum rated leveled power for the full band (lowest of the maximum rated power levels) for the instrument being tested (refer to Appendix B, Technical Data Sheet).
   - **f.** Press **Modulation**, AM, then Internal/External to select external AM, then set on/off to on.
   - **g.** Press Log/Linear to select linear modulation.
   - **h.** Press Edit Sensitivity and set the AM sensitivity to 50%.
2. Connect attenuation PAD to the DUT RF output for the following output power conditions:

   L1 < 0 dBm, install a 6 dB attenuation PAD

   0 dBm < L1 ≤ 3 dBm, install a 10 dB attenuation PAD

   3 dBm < L1 ≤ 13 dBm, install a 20 dB attenuation PAD

   13 dBm < L1 ≤ 20 dBm, install a 26 dB attenuation PAD
3. Set up the local oscillator as follows (the local oscillator is not required on the first frequency measured):
   - **a.** Reset the instrument by pressing **System**, then Reset. After reset, the CW menu is displayed.
   - **b.** Press Edit F1 to open the current frequency parameter for editing.
   - **c.** Set F1 to the first/next applicable LO frequency listed in the test record.
   - **d.** Press Edit L1 to open the current level parameter for editing and set L1 to +6 dBm.
4. Set up the multimeter to measure an AC signal by pressing V AC, then Auto.
5. Set up the Function Generator as follows:
   - **a.** Press the ∿ (sine wave) key, then the **Freq** key and adjust the frequency to 10 Hz using the rotary knob.
   - **b.** Press the **Ampl** key and adjust the voltage to 0.7071 V_{rms} using the rotary knob (read the voltage on the multimeter).
6. Disconnect the Multimeter. Connect the multimeter to the modulation analyzer's demodulated output port and press **AM** on the modulation analyzer.
7. Record the measured AC voltage value on the multimeter as V_0 in the test record.

8. Disconnect the multimeter. Using a BNC tee, connect the Function Generator output to the AM IN connector of the MG369xC and to the multimeter input.

9. Repeat steps 6 through 9 for each of the following Function Generator frequencies and record the results in the respective column in the test record:

V_1 = 1 kHz

V_2 = 2 kHz

V_3 = 3 kHz

V_4 = 4 kHz

V_5 = 5 kHz

V_6 = 6 kHz

V_7 = 7 kHz

V_8 = 8 kHz

V_9 = 9 kHz

V_{10} = 10 kHz

10. Find the maximum (V_{max}) and minimum (V_{min}) voltage values for V_x and calculate the AM flatness (AM_{flat}) using the following equation:

$$AM_{flat} = 20 \times \log\left(\frac{V_{max}}{V_{min}}\right)$$

11. Connect the RF output of the local oscillator and the MG369xC to the mixer's L- and R-ports, respectively, then connect the IF output of the mixer to the modulation analyzer's RF input.

12. Repeat steps 5 through 10 for each of the MG369xC and local oscillator CW frequency pairs listed in the test record.

4-13 Pulse Modulation Tests

The pulse modulation tests verify the operation of the pulse modulation circuits in the MG369xC. Rise time, fall time, overshoot, and power accuracy of the pulsed RF output are verified using a high speed digital sampling oscilloscope. Pulse depth (on/off ratio) is measured using a spectrum analyzer.

Note	For test settings and recording test data for this section, refer to Appendix B, "Test Records (Standard Test Equipment)" from page B-86 to page B-88

Note	Before performing this procedure ensure that all test equipment is calibrated. Refer to the manufacturer's test equipment manual.

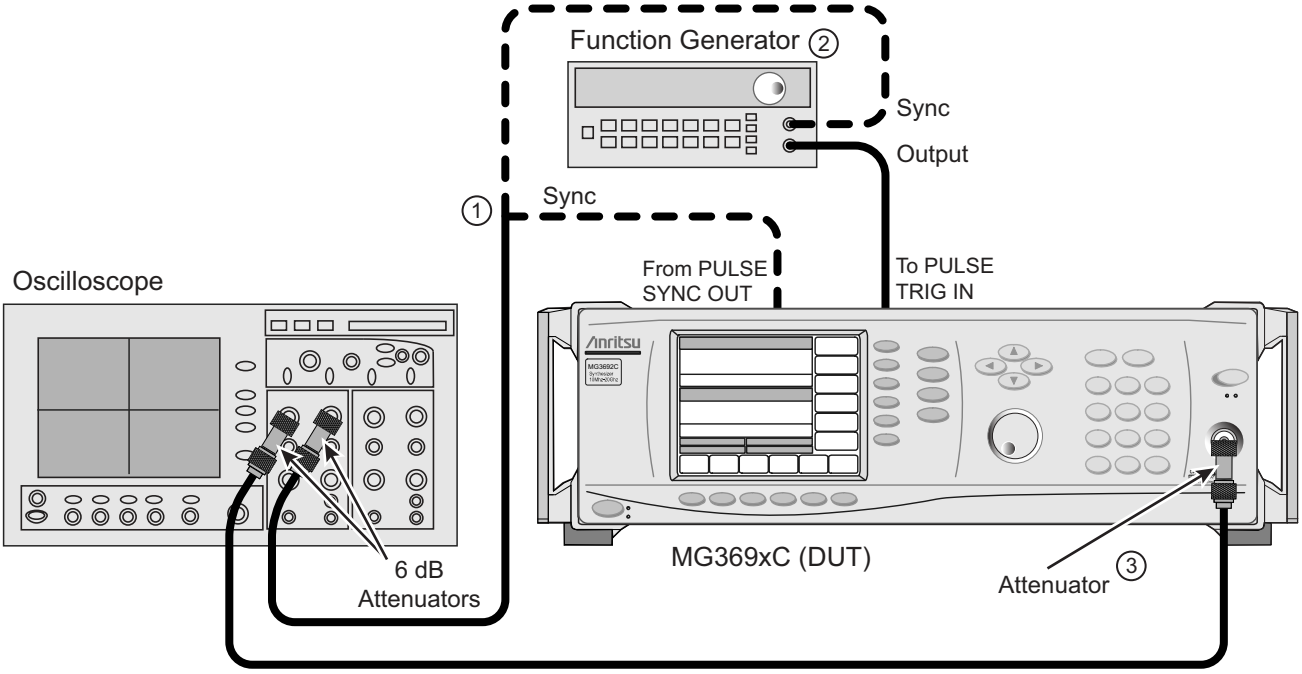

Index	Description
1	Connect the PULSE SYNC OUT from the MG369xC or the SYNC from the function generator as appropriate.
2	The function generator is required only if the MG369xC does not have Option 24 or Option 27.
3	Connect the attenuator as specified in the procedure.

Figure 4-15. Equipment Setup for the Pulse Modulation Tests

Test Setup

Connect the equipment shown in Figure 4-15, as follows:

1. Using the 2.4 mm (f) to K (f) adapters, connect a 6 dB fixed attenuator to the oscilloscope's Channel 1 and Trigger inputs.
2. Connect a RF coaxial cable to the 6 dB attenuator at the oscilloscope's Channel 1 input.
3. For models without internal pulse, use a BNC to SMA adapter to connect a 50Ω BNC cable from the Function Generator's SYNC to the 6 dB attenuator at the oscilloscope's Trigger input.
4. For models with internal pulse, use a BNC to SMA adapter to connect a 50Ω BNC cable from the MG369xC's PULSE SYNC OUT to the 6 dB attenuator at the oscilloscope's Trigger input.

5. For models without internal pulse, connect a 50Ω BNC cable from the Function Generator's signal output to the MG369xC's rear panel PULSE TRIG IN connector.
6. Set up the oscilloscope as follows:
   - **a.** Press the **Default Setup** key.
   - **b.** From the title bar, select:

     Measure | Math | Function 1
   - **c.** Set the operator to MAX and turn on the Function 1 display.
   - **d.** Select Close to close the open window.
   - **e.** Select the **Trigger Level** button on the bottom of the display.
   - **f.** Set the trigger level to 500 mV.
   - **g.** Set the bandwidth to DC to 2.5 GHz.
   - **h.** Select rising edge ( ) triggering.
   - **i.** Select the left module as the source.
   - **j.** Select Close to close the open window.
   - **k.** Turn off channel 1 on the oscilloscope by pressing the 1 key above the module (LED off).
7. For models without internal pulse, set up the Function Generator as follows:
   - **a.** Turn the Function Generator off, then back on to reset the instrument.
   - **b.** Press the key to select the square wave function.
   - **c.** Press the **Freq** key, then the green **Enter Number** key and enter 250 kHz.
   - **d.** Press the blue **Shift** key, then the %Duty Cycle key and use the rotary knob to adjust the duty cycle to 25%.
   - **e.** Press the **Ampl** key, then the green **Enter Number** key and enter 2.2 $V_{p\text{-}p}$.
   - **f.** Press the Offset key, then the green **Enter Number** key and enter 1.1 VDC.

Pulse Rise Time, Fall Time and Overshoot

The following procedure lets you measure the rise time, fall time, and overshoot of the MG369xC's pulse modulated RF output.

Repeat the measurements of the pulse rise time, pulse fall time, and pulse overshoot based on the DUT frequencies in test records.

Pulse Rise Time

1. Set up the MG369xC as follows:
   - **a.** Reset the instrument by pressing **SYSTEM**, then Reset. After reset, the CW menu is displayed.
   - **b.** Turn RF output off.
   - **c.** Press Edit F1 to open the current frequency parameter for editing.
   - **d.** Press the **Frequency** button and set F1 to the first/next applicable frequency in the test record.
   - **e.** Press **Level** to open the current power level parameter for editing.
   - **f.** Set L1 to the maximum specified leveled output power level for the frequency and instrument being tested (refer to Appendix B, Technical Data Sheet).

g. Connect a fixed attenuator with the proper attenuation value (refer to Table 4-4) to the MG369xC RF Output, then connect the RF coaxial cable from the Channel 1 input of the oscilloscope to the fixed attenuator.

Table 4-4. MG369xC Attenuation

MG369xC Rated Power	Required Attenuation
≥18 dBm	20 dB
≥13 dBm	10 dB
≥10 dBm	6 dB
≥8 dBm	3 dB
<8 dBm	0 dB

h. Turn RF output ON.

i. For models ***without*** internal pulse:

(1) Press **Modulation** | Pulse | Internal/External to select the External Pulse Status menu.

(2) Ensure that the polarity is set to High RF On.

(3) Press On/Off to turn the external pulse on.

For models ***with*** internal pulse:

(1) Press **Modulation** | Pulse | Internal/External to select the Internal Pulse Status menu.

(2) Press Edit Period and enter 4 µs.

(3) Press Wdth/Dly List... | Edit Selected and enter 1 µs.

(4) Press Previous, then On/Off to turn the internal pulse mode on.

2. Set up the oscilloscope as follows:

a. Select the **Time/Delay** button on the bottom of the display.

b. Set the sweep time to 10 ns/div and the delay to 4 µs. Select Close to close the window.

c. Press the **Clear Display** key. Allow the oscilloscope to sample the signal and wait for a clearly defined waveform to appear on the display.

d. Select the **Scale** button at the lower left corner of the display.

e. Set the scale and offset voltages so that the positive peak of the pulse is centered and the amplitude is optimally displayed. Select Close to close the window.

f. Select the **Rise Time** button (on the left hand side of the display).

3. Read the measured result from the bottom of the display and enter the result in the test record.

Pulse Fall Time

1. Set up the oscilloscope as follows:

a. Select the **Time/Delay** button on the bottom of the display.

b. Set the delay time to 5 µs. Select Close to close the window.

c. Press the **Clear Display** key. Allow the oscilloscope to sample the signal and wait for a clearly defined waveform to appear on the display.

d. Select the **Fall Time** button (on the left hand side of the display).

2. Read the measured result from the bottom of the display and enter the result in the test record.

Overshoot

3. Set up the oscilloscope as follows:
   a. Select the **Time/Delay** button on the bottom of the display.
   b. Set the sweep time to 120 ns/div and the delay to 4 µs. Select Close to close the window.
   c. Press the **Clear Display** key. Allow the oscilloscope to sample the signal and wait for a clearly defined waveform to appear on the display.
   d. Select the **Amplitude** button, then the **Overshoot** button (on the left hand side of the display).
4. Read the measured result from the bottom of the display and enter the result in the test record.
5. Repeat steps 1b through 7 for each frequency listed in the test record.

Pulse Power Accuracy

The following procedure lets you measure the pulse power accuracy of the MG369xC's pulse modulated RF Output. The accuracy is tested with a 1 µs and a 0.5 µs pulse width.

1. Disconnect the MG369xC's RF coaxial cable from the front of the unit. Set up the equipment as described in Figure 4-15. Perform steps 1 to 6 in "Test Setup" on page 4-51.
2. For models without internal pulse, set up the Function Generator as follows:
   a. Turn the Function Generator off, then back on to reset the instrument.
   b. Press the ⊓⊔ key to select the square wave function.
   c. Press the **Freq** key, then the green **Enter Number** key and enter 250 kHz.
   d. Press the blue **Shift** key, then the **%Duty Cycle** key and use the rotary knob to adjust the duty cycle to 25%.
   e. Press the **Ampl** key, then the green **Enter Number** key and enter 2.2 $V_{p\text{-}p}$.
   f. Press the **Offset** key, then the green **Enter Number** key and enter 1.1 VDC.
3. Set up the MG369xC as follows:
   a. Reset the instrument by pressing **SYSTEM**, then Reset. After reset, the CW menu is displayed.
   b. Turn RF output OFF.
   c. Press Edit F1 to open the current frequency parameter for editing.
   d. Set F1 to the first/next applicable frequency in the test record.
   e. Press **Level** to open the current power level parameter for editing.
   f. Set L1 to the maximum specified leveled output power level for the instrument being tested (refer to Appendix B, Technical Data Sheet).
   g. Connect a fixed attenuator with the proper attenuation value (refer to Table 4-5) to the MG369xC RF Output and then connect the RF coaxial cable from the Channel 1 Input of the Oscilloscope to the fixed attenuator.

Table 4-5. MG369xC Attenuation

MG369xC Rated Power	Required Attenuation
≥18 dBm	20 dB
≥13 dBm	10 dB
≥10 dBm	6 dB
≥8 dBm	3 dB
<8 dBm	0 dB

h. Turn RF output ON.

i. For models ***without*** internal pulse:

Press **Modulation** | Pulse | Internal/External to select the External Pulse Status menu.

Ensure that the polarity is set to High RF Off.

Press On/Off to turn the external pulse on.

j. For models ***with*** internal pulse:

Press **Modulation** | Pulse | Internal/External to select the Internal Pulse Status menu.

Press Edit Period and enter 4 µs.

Press Wdth/Dly List... | Edit Selected and enter 1 µs (or 0.5 µs).

Press Previous, then On/Off to turn the internal pulse mode off.

4. Set up the oscilloscope as follows:

a. Press the **Source** button (near the trigger) until Free Run is illuminated.

b. Select the **Scale** button at the lower left corner of the display and set the scale to 20 mV/div.

c. Set the Offset so that the trace is centered on the display, and select Close.

d. Select the Amplitude button and then the Vavg button (on the left hand side of the display), touch OK to close.

Note	Use the scroll bar to locate the Vavg button.

5. Read the measured result on the display and record the result as V_{ref} in the test record.

6. On the MG369xC, press On/Off to turn pulse modulation on.

7. Set up the oscilloscope as follows:

a. Press the **Source** button (near the trigger) until Left Module is illuminated.

b. Press the Clear display key. Allow the oscilloscope to sample the signal and wait for a clearly defined waveform to appear on the display.

c. Select Time Delay and scale so that only the positive peak portion of the pulse fills the display (for example, set the scale to 90 ns/div and the delay time to 4.075 µs for a 1 µs pulse or set the scale to 45 µs/div and the delay time to 4.075 µs for a 500 µs pulse). Press Close to close the window.

d. Select the Vavg button and read the measured result on the display.

8. Record the result as V_{pulse} in the test record.

9. Calculate the difference of the two voltages using the following equation, then record the result in the test record as $P_{accuracy}$.

$$P_{accuracy} = 20 \times \log\left(\frac{V_{pulse}}{V_{ref}}\right)$$

10. Repeat steps 3b to 10 for each frequency listed in the test record.

11. For models without internal pulse, repeat steps 3b to 10 using a Function Generator square wave frequency input of 500 kHz with a 25% duty cycle.

12. For models with internal pulse, repeat steps 3b to 10 using a pulse width of 0.5 µs.

Pulse On/Off Ratio

The following procedure lets you measure the pulse on/off ratio of the MG369xC's pulse modulated RF output.

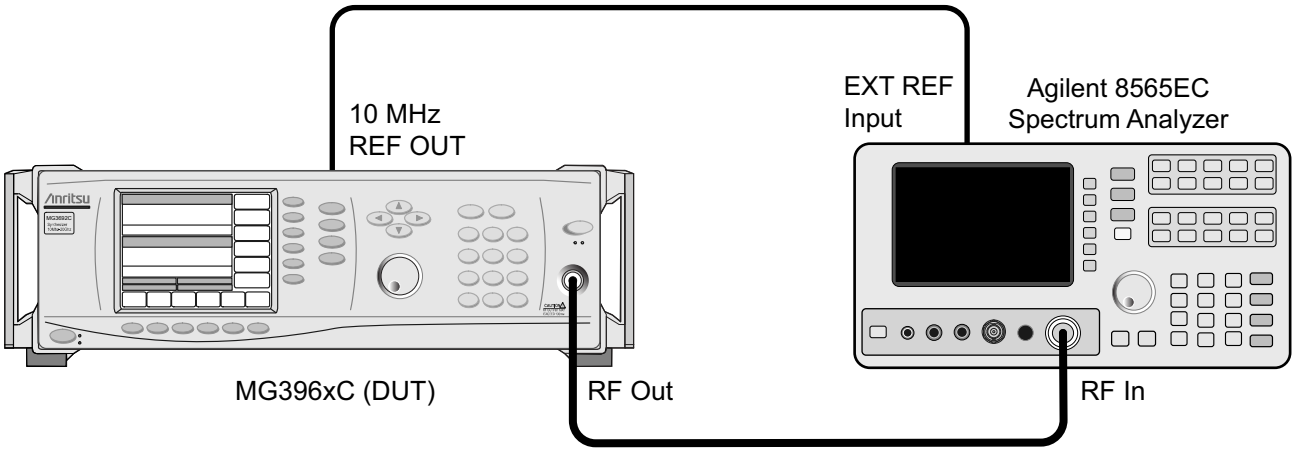

Figure 4-16. Equipment Setup for Pulse On/Off Ratio Tests

Test Setup

Set up the equipment shown in Figure 4-16, as follows:

1. Connect the MG369xC's rear panel 10 MHz REF OUT to the spectrum analyzer's external reference input.
2. Connect the MG369xC RF Output to the spectrum analyzer's RF input.
3. Set up the spectrum analyzer as follows:
   - **a.** Press the **PRESET** key.
   - **b.** Press **AUX CTRL**.
   - **c.** Press the Rear Panel soft key.
   - **d.** Press the 10MHz soft key and set to "EXT".

Test Procedure

Measure the pulse on/off ratio as follows:

1. Set up the MG369xC as follows:
   - **a.** Reset the instrument by pressing **SYSTEM**, then Reset. After reset, the CW menu is displayed.
   - **b.** Press Edit F1 to open the current frequency parameter for editing.
   - **c.** Set F1 to the first/next applicable frequency in the test record for the model being tested.
   - **d.** Press Level to open the current power level parameter for editing and set L1 to the maximum specified leveled output power level.
   - **e.** Press **Modulation**, then Pulse to select the External Pulse Status menu.
   - **f.** Press Low RF On and ensure that the pulse mode is turned off.
2. Set up the spectrum analyzer as follows:
   - **a.** Press the **PRESET** key.
   - **b.** Press the **AMPLITUDE** key and enter the current power level setting of the MG369xC.
   - **c.** Press the **FREQUENCY** key and enter the current frequency setting of the MG369xC.

d. Press the **SPAN** key and enter 100 kHz.

e. Press the **MKR** key, then select MARKER DELTA to set the marker reference.

3. On the MG369xC's External Pulse Status menu, select On/Off to turn the pulse mode on.

Note	The signal level may drift slowly after the pulse mode is turned on. (Make the measurement as soon as possible after turning the pulse mode on.) This drift is the result of the Sample/Hold circuit not holding the level because of a very low pulse duty factor (time ratio of RF ON to RF OFF). This drift will not be present in normal pulse operation as the minimum pulse repetition rate is 100 Hz.

4. On the spectrum analyzer, read the marker delta value and record the value as P_{depth} in the test record.

5. Repeat steps 1a to 4 for each frequency listed in the test record.

Chapter 5 — Calibration

5-1 Introduction

This chapter contains procedures for calibrating the series MG369xC Synthesized Signal Generators. These procedures are typically performed because out-of-tolerance conditions have been noted during performance verification testing (either Chapter 3, "Performance Verification using N5531S Measuring Receiver" or Chapter 4, "Performance Verification using Standard Test Equipment") or as a result of replacement of subassemblies or RF components. Contact an Anritsu Service Center for more information.

Note	The calibration procedures herein support operating firmware version 3.36 and above. Anritsu recommends that you upgrade your instrument's operating firmware to the latest available version prior to calibration.

5-2 Test Equipment List

Table 5-1 provides a list of the test equipment for these calibration procedures. Section 5-10 through Section 5-14 each contain a diagram showing equipment for performing RF level calibration and calibration of options. The test equipment setup is critical to making accurate measurements. In some cases, you may substitute test equipment having the same critical specifications as the equipment indicated in the test equipment list (refer to "Measurement Uncertainty" on page 4-7).

Table 5-1. Test Equipment List (1 of 4)

Instrument	Critical Specification	Manufacturer/Model	Test Application[a]	Test Equipment Usage [b]
Computer running Windows XP	Can not exceed the following configuration: Pentium 4 2.8 GHz 1 GB RAM 2 Serial ports CDROM Mouse Keyboard Monitor Network The computer must be dedicated during calibration and verification activities.	Dell or other common source	C, P	S, N
National Instrument PCI GPIB card	PCI GPIB card for computer	National Instrument	C, P	S, N
Anritsu RF verification and calibration software		Anritsu 2300-497	C, P	S
Spectrum Analyzer	Frequency: 100 kHz to 50 GHz Resolution bandwidth: 10 Hz	Agilent 8565EC	C, P	S

Table 5-1. Test Equipment List (2 of 4)

Instrument	Critical Specification	Manufacturer/Model	Test Application[a]	Test Equipment Usage [b]
Frequency counter *For use in calibration and performance verification.* *For use with performance verification only.*	 Frequency range: 0.01 to 20 GHz Input impedance: 50 ohms Resolution: 1 Hz Other: External time base input Frequency range: 0.01 to 6 GHz Input impedance: 50 ohms Resolution: 1 Hz Other: External time base input	 For calibration and performance verification the recommendation is Anritsu model MF2414B For performance verification the recommendation is Anritsu model MF2412B	C, P	S, N
Power meter	Frequency: 100 kHz to 67 GHz Power range: –70 to +20 dBm	Anritsu model ML2437A/38A	C, P	S
Power sensor for power meter	Frequency: 0.01 GHz to 40 GHz (K) Connector Power range: –70 to +20 dBm	Anritsu model MA2474D	C, P	S
Power sensor for power meter	Frequency: 0.01 GHz to 50 GHz (V) Connector Power range: –70 to +20 dBm	Anritsu model MA2475D	C, P	S
Power sensor for power meter	Frequency: 0.01 GHz to 67 GHz (V) Connector Power range: –30 to +20 dBm	Anritsu model SC7430 **or** Anritsu model SC7570	C, P	S
Power sensor for power meter	Frequency:100 kHz to 18 GHz (N) Connector Power range: –55 +20 dBm	Anritsu model SC7400	C, P	S
Adapter K male to N female (For power sensor SC7400 and N5532B opt 504)	N(m) to K(f)	Anritsu model 34NKF50	C, P	S
Adapters for power sensor calibration	N(m) to V(f)	Common source **or** Alternate to achieve N(m) to V(f): Anritsu model 34NK50 + 34VKF50 **or** Anritsu model 34NKF50 + 34VK50	C, P	S
Function generator	Frequency: 0.1 Hz to 15 MHz	Agilent 33120A	C, P	S, N
Frequency reference	Frequency: 10 MHz Accuracy: 5 x 10^{-12} parts/day	Absolute Time Corp., model 300 **or** Symmetricom (Datum) model 9390-9600	C, P	S, N
Measuring receiver See footnote [c]	Noise floor: < –140 dBm @ 500 MHz	Anritsu model ML2530A	C, P	S

Table 5-1. Test Equipment List (3 of 4)

Instrument	Critical Specification	Manufacturer/Model	Test Application[a]	Test Equipment Usage [b]
Local oscillator	Frequency: 0.01 to 40 GHz	Anritsu Model MG3694C with options: 3, 4, and 16 (unit must not have options 2B, 15B or 22) **Note:** If the T12579 mixer box is ordered then special SM6191 must be added to LO.	C, P	S
Mixer box (for low level calibration) See footnote [c]	Frequency range: 0.01 GHz to 40 GHz	Anritsu PN: T2579	C, P	S
Low pass filter (Qty = 2) See footnote [c]	1.9 GHz LPF	Mini-Circuits BPL-1.9 **or** Anritsu PN: 1030-104	C, P	S, N
Scalar network analyzer with RF detector	Frequency: 0.01 to 40 GHz	Anritsu model 56100A with RF detector: 560-7K50 (0.01 to 40 GHz) **or** 560-7VA50 (0.01 to 50 GHz)	C, P, T	N/A
AUX I/O interface cable (for Scalar network analyzer)	Provides interface between the instrument under test and the 56100A Scalar Network Analyzer	Anritsu PN: 806-7	C	N/A
Attenuator for instrument model numbers MG3691C through MG3694C	Frequency range: DC to 40 GHz Attenuation: 3, 6, 10, and 20 dB (sizes and counts are determined depending on options and maximum output power of instrument)	Anritsu part number SC7879 K set of attenuators (41KC-3, 41KC-6, 41KC-10, 41KC-20) (Must be calibrated - See footnote [d]) **or** Anritsu, model 41KC-3, 41KC-6, 41KC-10 or 41KC-20 (Must be calibrated - See footnote [d])	C, P	S, N
Attenuator for instrument model numbers MG3695C through MG3697C	Frequency Range: DC to 65 GHz Attenuation: 3, 6, 10, and 20 dB (sizes and counts are determined depending on options and maximum output power of instrument)	Anritsu part number SC7880 V set of attenuators (41V-3, 41V-6, 41V-10, 41V-20) (Must be calibrated - See footnote [e]) **or** Anritsu, model 41V-3, 41V-6, 41V-10 and 41V-20 (Must be calibrated - See footnote [e])	C, P	S, N
BNC Tee	Connectors: 50 Ohms BNC	Any common source	C, P	S, N
Generic 50 Ohm BNC RF cables and connectors		Any common source	C, P	S, N
Generic GPIB cables		Any common source	C, P	S, N

Table 5-1. Test Equipment List (4 of 4)

Instrument	Critical Specification	Manufacturer/Model	Test Application[a]	Test Equipment Usage [b]
Armored Semi Rigid Test Port Cable K(m) to K(m) flex cables or semi-rigid cables	K(m) to K(m) flex cables **or** Semi-rigid cables	Anritsu SC3855 K(m) to K(m) flex cable (Must be calibrated - See footnote [d] [f]) **or** Anritsu K120mm-60CM custom semi-rigid cable	C, P	S, N
Armored Semi Rigid Test Port Cable K(m) to K(f) flex cables or semi-rigid cables	Used for MG3691C, MG3692C MG3693C and MG3694C testing K(m) to K(f) flex cables V(m) to V(f) flex cables **or** Semi-rigid cables	Anritsu 3670K50-2 K(m) to K(f) flex cable (Must be calibrated - See footnote [d] [f])	C, P	S, N
Armored Semi Rigid Test Port CableV(m) to V(f) flex cables or semi-rigid cables	Used for MG3695C and MG3697C testing V(m) to V(f) flex cables **or** Semi-rigid cables	Anritsu APN 3670V50-2 V(m) to V(f) flex cable Anritsu 3670K50-2 K(m) to K(f) flex cable (Must be calibrated - See footnote [e] [f]) **or** Anritsu V120mm-60CM Custom Semi-rigid cable	C, P	S, N
Adapter V male to K female	Adapter V(m) to K(f)	Anritsu 34VKF50 (Must be calibrated - See footnote [d])	P, C	S, N
Adapter K male to N female (For power sensor SC7400 and N5532B opt 504)	Adapter K(m) to N(f)	Anritsu 34NFK50 (Must be calibrated - See footnote [g])	P	S, N
Adapter N male to K female	Adapter N male to K female	Anritsu 34NKF50 (Must be calibrated - See footnote [g])	P	S, N
Anritsu Cal Data Save/Recall software		Anritsu P/N 2300-478	C	N/A
Special Serial I/O Cable Assembly	Provides interface between the MG369xC and the PC	Anritsu P/N: T1678	C, P	S, N

a. P = Performance Verification Tests, C = Calibration, T = Troubleshooting

b. S = Standard Test Equipment, N = N5531S Measurement Receiver equipment

c. Only needed if option 2X is installed.

d. Calibrated at the following data points: 100 kHz, 1 MHz, 10 MHz, 100 MHz, 500 MHz to 40 GHz in 500 MHz steps

e. Calibrated at the following data points: 100 kHz, 1 MHz, 10 MHz, 100 MHz, 500 MHz to 67 GHz in 500 MHz steps

f. These cables are not designed for repeated bending. Bend them into the desired shape, then avoid further bending.

g. Calibrated at the following data points: 100 kHz, 1 MHz, 10 MHz, 100 MHz, 500 MHz to 4 GHz in 500 MHz steps.

5-3 Test Records

A blank copy of a sample calibration test record for each MG369xC model is provided in Appendix A or Appendix B. It provides a means for maintaining an accurate and complete record of instrument calibration. We recommend that you copy these pages and use them to record your calibration of out-of-tolerance MG369xC circuits or your calibration of the MG369xC following replacement of subassemblies or RF components.

Note For recording completion of the procedures in this chapter, refer to Appendix A, "Test Records (N5531S Test Equipment)" from page A-141 to page A-146 or Appendix B, "Test Records (Standard Test Equipment)" from page B-89 to page B-94.

5-4 Subassembly Replacement

Table 5-2 lists the calibrations that should be performed following the replacement of many MG369xC subassemblies or RF components.

Table 5-2. Calibration Following Subassembly/RF Component Replacement

Subassembly/RF Component Replaced	Perform the Following Calibration(s) in Section(s):
Front Panel Assembly	None
A2 Microprocessor PCB	5-7 thru 5-10 (if calibration information was not transferred from original A2 board; perform calibrations steps 5-7 to 5-14)
A3 Reference Loop PCB	5-7 (and 5-10 if Option 22 is installed)
A4 Coarse Loop PCB	5-7
A5 Auxiliary PCB (without Option 6)	None
A5 Analog Instruction PCB (Option 6)	5-7, 5-12
A6A1 External AM PCB (Option 14 or 28x)	5-13
A6 ALC PCB	5-8, 5-9, 5-10
A7 YIG Lock PCB	None
A7A1 External FM/ΦM PCB	5-14
A8 Function Generator	None
A9 YIG Module Assembly	5-7, 5-9, 5-10
A20 Regulator Board	None
A21 Regulator Board	None
Power Supply	None
0.008 to 2.2 GHz Digital Down Converter Assembly (Option 4)	5-7, 5-9, 5-10
0.008 to 2 GHz Down Converter Assembly (Option 5)	5-7, 5-9, 5-10
All Other RF Components	5-7, 5-9, 5-10, 5-11 and 5-12 (if option 6 is installed)

Note Calibration is not required for items not listed in Table 5-2.

5-5 Connector and Key Notation

The calibration procedures include many references to equipment interconnections and control settings. For all MG369xC references, specific labels are used to denote the appropriate menu key, data entry key, data entry control, or connector (such as CW/SWEEP SELECT or RF OUTPUT). Most references to supporting test equipment use general labels for commonly used controls and connections (such as Span or RF Input). In some cases, a specific label is used that is a particular feature of the test equipment listed in Table 5-1.

5-6 Initial Setup

The MG369xC is calibrated using a PC and external test equipment. The PC must have the Windows 95/98/ME or the Windows NT/2000/XP operating system installed and be equipped with a mouse. Initial setup consists of interfacing the PC to the MG369xC.

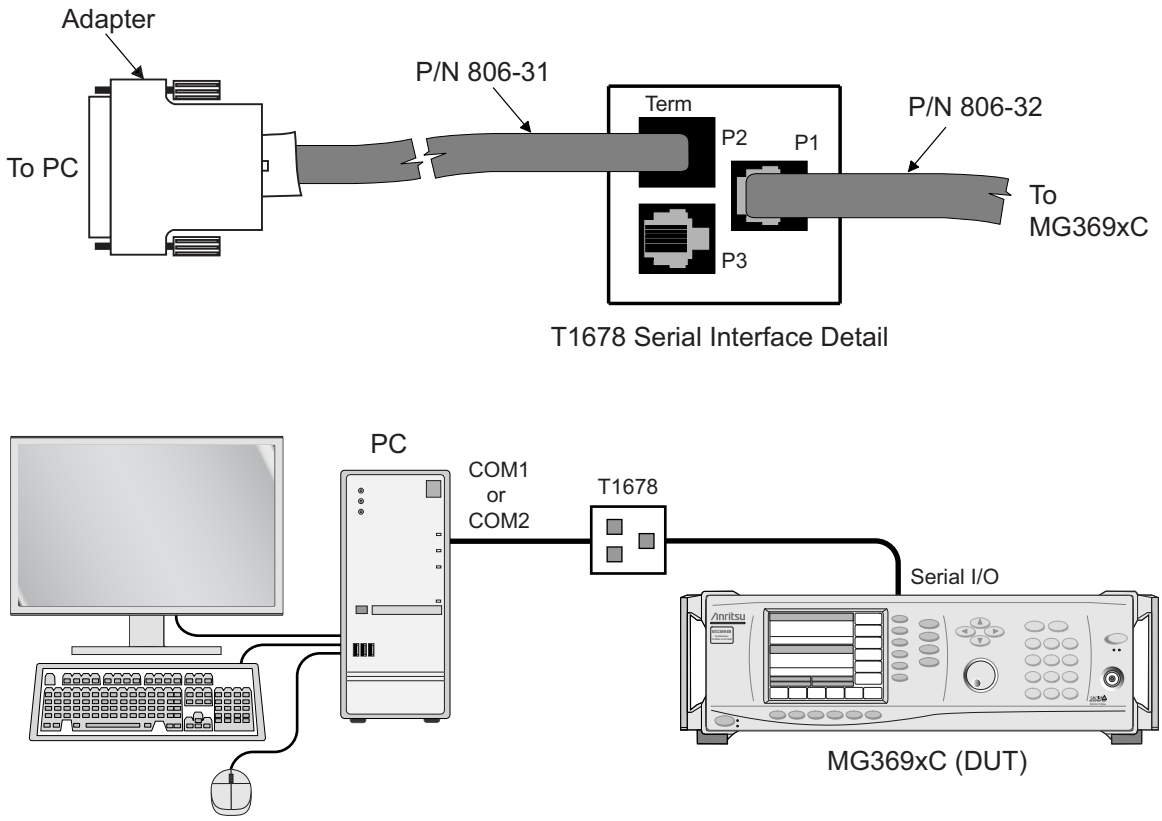

Figure 5-1. PC to MG369xC Interconnection for Calibration

Interconnection

Using an Anritsu serial interface assembly (PN: T1678), connect the PC to the MG369xC as follows:

1. Connect the wide flat cable between the MG369xC rear panel SERIAL I/O connector and the P1 connector on the T1678 serial interface PCB.
2. Connect the narrow flat cable between the P2 (TERM) connector on the T1678 serial interface PCB and the COM1 or COM2 connector on the PC. Use the RJ11-to-DB-9 or RJ11-to-DB-25 adapter, provided with the T1678 serial interface assembly, to make the connection at the PC.

PC Setup

Configure the PC with the Microsoft Windows operating system to interface with the MG369xC as follows:

1. Power on the MG369xC.
2. Power on the PC.
3. Go to Start | Programs | Accessories | Communications | HyperTerminal to start HyperTerminal (for Microsoft Windows XP). The New Connection window is shown below.

Note	If HyperTerminal is not present, it will need to be installed from the Windows Setup CD.

4. In the Connection Description box, type a name for the new connection, then click on the OK button. The window below is now displayed.

5. In the Connect using: box, type or select: Direct to Com "_" (Enter the number of the communications port being used, for example: Direct to Com 1).

6. Click OK. The Communications Port Properties window is displayed.

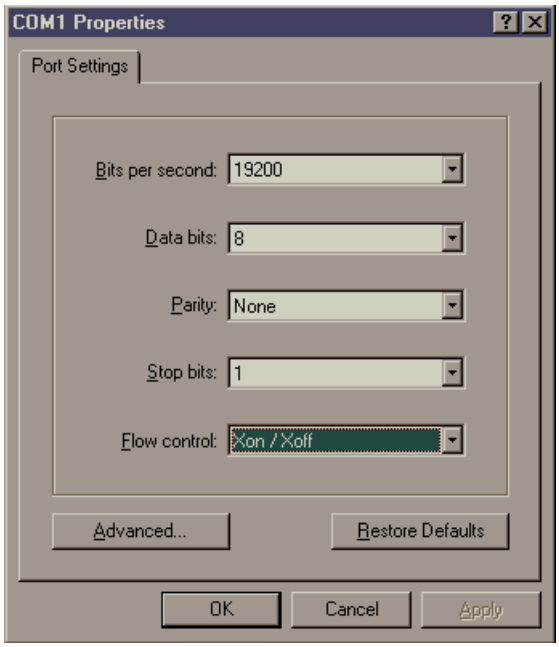

7. In the Properties window, make the following selections:

Bits per second19200
Data bits8
ParityNone
Stop bits1
Flow controlXon / Xoff

8. After making the selections, click on the OK button.

9. Press <ENTER> on the keyboard.

10. Verify that the $ prompt appears on the PC display.

11. This completes the initial setup for calibration.

5-7 Preliminary Calibration

This procedure provides the steps necessary to initially calibrate the coarse loop, fine loop, frequency instruction, internal DVM circuitry and the 10 MHz reference oscillator of the MG369xC. If Option 16 is installed, the 10 MHz reference oscillator is calibrated.

Note	Record completion of the steps in this section in Appendix A, “Test Records (N5531S Test Equipment)” on page A-141 or Appendix B, “Test Records (Standard Test Equipment)” on page B-89.

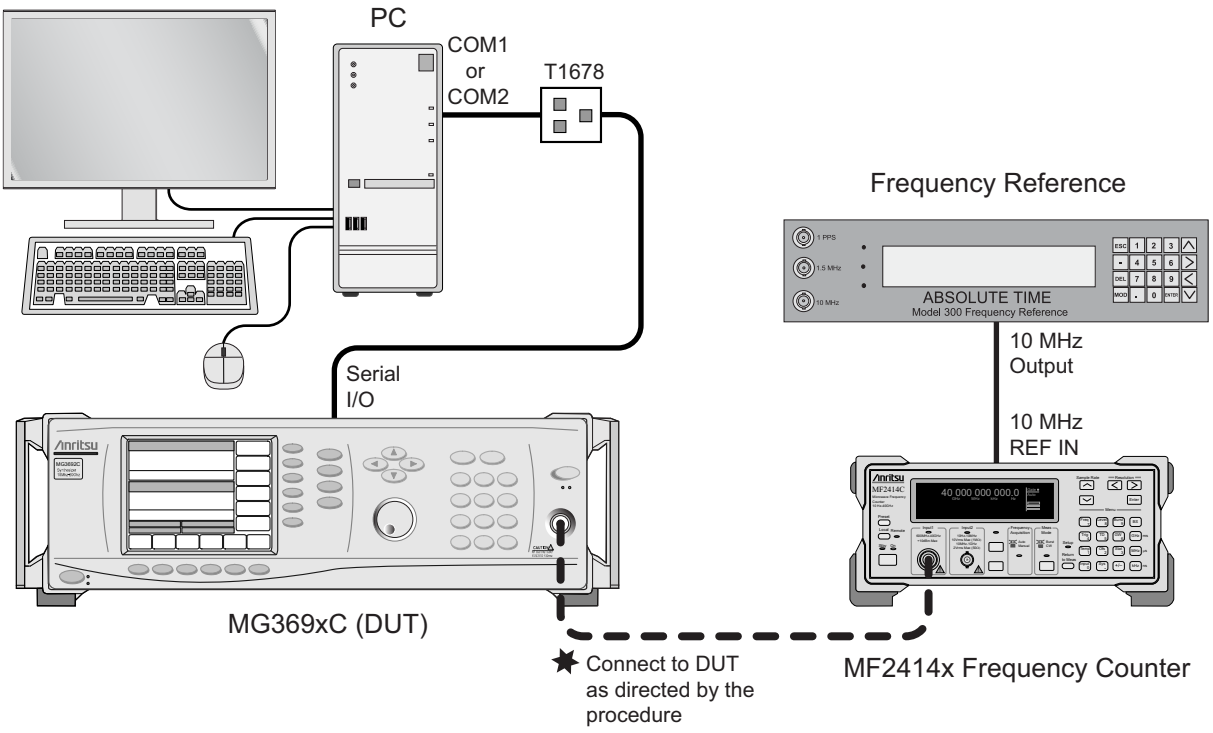

Figure 5-2. Equipment Setup for Preliminary Calibration

Equipment Setup

Connect the equipment shown in Figure 5-2, as follows:

1. Interface the PC to the MG369xC by performing the initial setup procedure detailed in Section 5-6.
2. Connect the frequency counter to the MG369xC when directed to do so during the calibration procedure.

Note	Before beginning this calibration procedure, always let the MG369xC warm up for a minimum of one hour.

Calibration Steps

Each of the steps in this procedure provides initial calibration of a specific MG369xC circuit or component. To ensure accurate instrument calibration, each step of this procedure must be performed in sequence.

1. Calibrate the internal DVM circuitry as follows:
   - **a.** At the $ prompt, type: calterm 119 and press <ENTER>. The $ prompt will appear on the screen when the calibration is complete.
   - **b.** Record step completion in the test record.

2. Calibrate the coarse loop pre-tune DAC as follows: (models with Option 3 or 3x only)

a. At the $ prompt, type: calterm 137 and press <ENTER>. The $ prompt will appear on the screen when the calibration is complete.

b. Record step completion in the test record.

Note	To save the calibration data after completing any calibration step, type: calterm 787 and press <ENTER>.

3. Calibrate the sweep time DAC as follows:

a. At the $ prompt, type: calterm 132 and press <ENTER>. The $ prompt will appear on the screen when the calibration is complete.

b. Record step completion in the test record.

4. If option 6 is installed then calibrate the YIG offset calibration as follows:

a. At the $ prompt, type: calterm 134 and press <ENTER>. The $ prompt will appear on the screen when the calibration is complete.

b. Record step completion in the test record.

5. Calibrate the YIG frequency linearizer DACs as follows:

a. At the $ prompt, type: calterm 127 and press <ENTER>. The $ prompt will appear on the screen when the calibration is complete.

b. Record step completion in the test record.

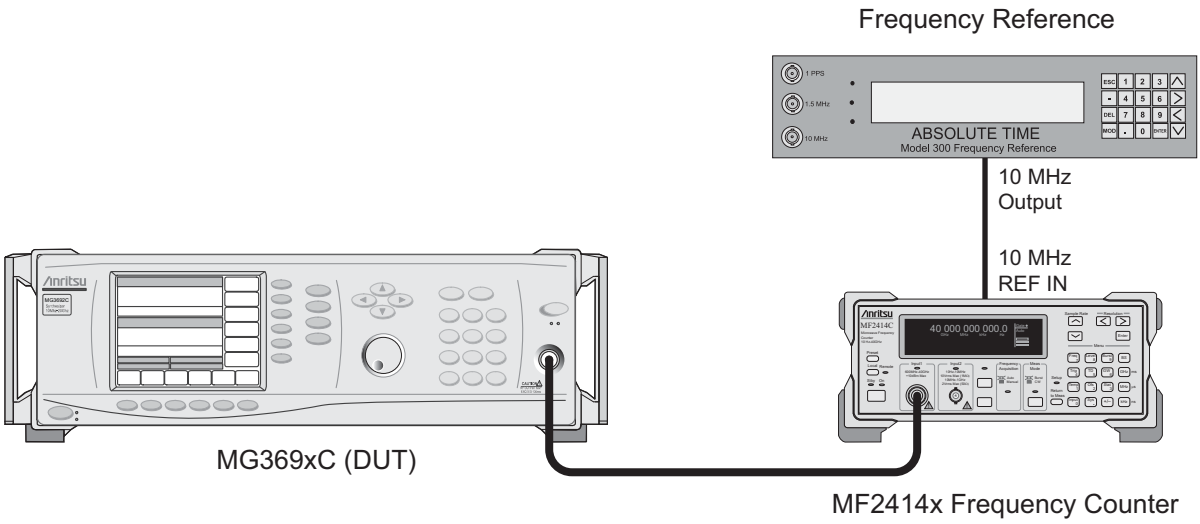

Figure 5-3. Equipment Setup for 10 MHz Reference Oscillator Calibration

6. For all MG369xC models, calibrate the 10 MHz reference oscillator per the procedure described in the steps below:

a. Connect the equipment as shown in Figure 5-3.

b. Connect the frequency counter to the MG369xC RF output connector.

Note	For an alternate 10 MHz reference oscillator calibration procedure, go to Step 6a on the next page.

c. At the $ prompt, type: calterm 130 and press <ENTER>.

d. Follow the instructions on the screen.

e. Record step completion in the test record.

7. Calibrate the ramp center DAC as follows:

a. At the $ prompt, type: calterm 129 and press <ENTER>. The $ prompt will appear on the screen when the calibration is complete.

b. Record step completion in the test record.

8. Calibrate the sweep width DAC as follows:

a. At the $ prompt, type: calterm 133 and press <ENTER>. The $ prompt will appear on the screen when the calibration is complete.

b. Record step completion in the test record.

9. Calibrate the center frequency DAC as follows:

a. At the $ prompt, type: calterm 114 and press <ENTER>. The $ prompt will appear on the screen when the calibration is complete.

b. Record step completion in the test record.

10. Store the calibration data as follows:

a. At the $ prompt, type: calterm 787 and press <ENTER>. The $ prompt will appear on the screen when the calibration data has been stored.

b. Record step completion in the test record.

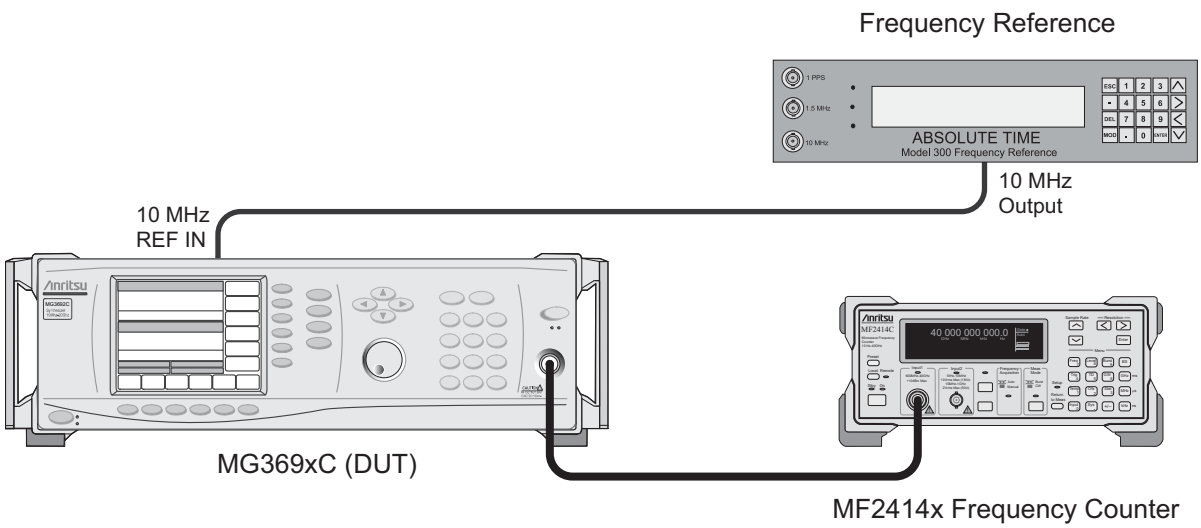

Figure 5-4. Equipment Setup for 10 MHz Reference Oscillator Calibration (Alternate Method)

Alternate 10 MHz Reference Oscillator Calibration

Note	This 10 MHz reference oscillator calibration procedure is an alternate to Step 6 of "Calibration Steps".

Note	If this procedure is used as a substitute for Step 6 of the preliminary calibration procedure, you must still perform Step 7 through Step 10 to complete the preliminary calibration of the MG369xC.

Step 6a. Calibrate the 10 MHz reference oscillator as follows:

c. Connect the frequency reference 10 MHz OUTPUT to the 10 MHz REF IN connector on the MG369xC rear panel.

d. On the MG369xC, press the **System** main menu key. At the System menu display, press Cal Menu to go to the Calibration menu.

e. Press Reference Cal to begin calibration. The Calibration Status menu is displayed.

f. Press Proceed to start the calibration. The date parameter opens for data entry.

g. Using the key pad, enter the current date (in any desired format). Then, press any terminator key. The Calibration Status menu display changes to indicate calibration is in progress.

h. When the reference oscillator calibration is complete, the Calibration menu is displayed.

i. Record step completion in the test record.

j. Proceed to Step 7 of the preliminary calibration procedure on page 5-11).

5-8 Frequency Synthesis Tests

The following tests can be used to verify correct operation of the frequency synthesis circuits, frequency synthesis testing is divided into two parts—coarse loop/YIG loop tests and fine loop tests.

Note	Record completion of the steps in this section in Appendix A, “Test Records (N5531S Test Equipment)” on page A-142 or Appendix B, “Test Records (Standard Test Equipment)” on page B-90 to page B-92.

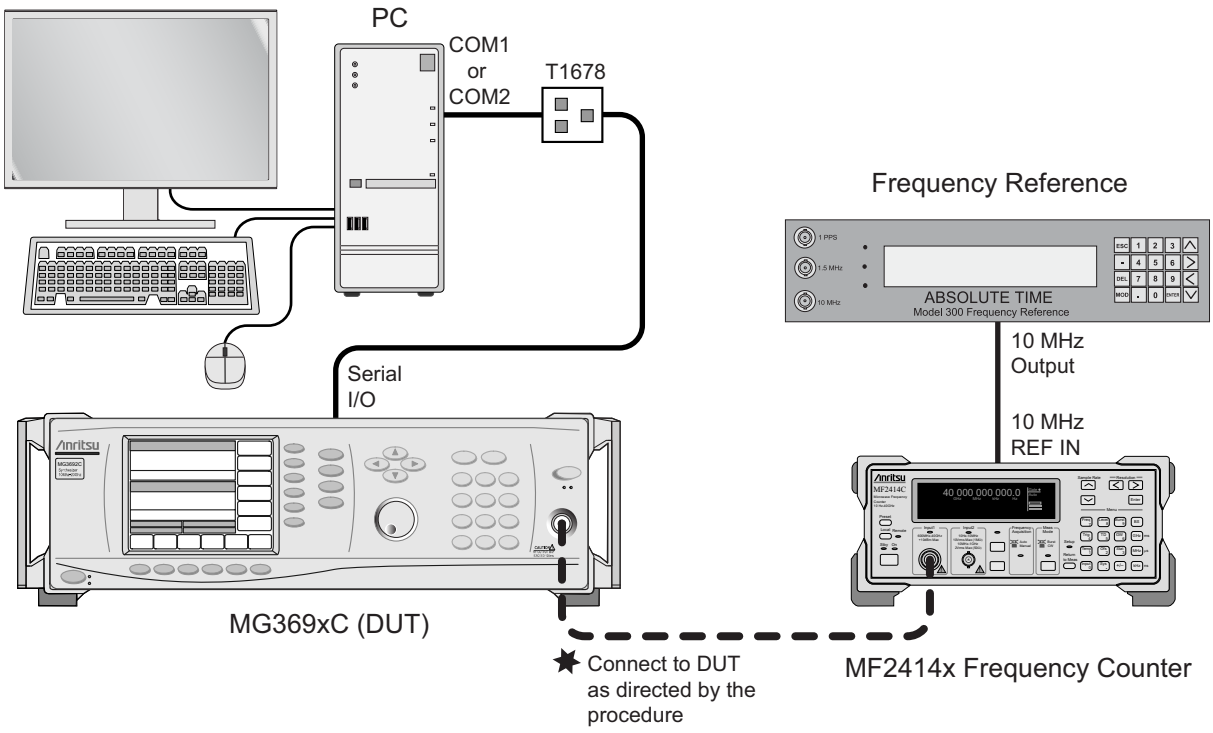

Figure 5-5. Equipment Setup for Preliminary Calibration

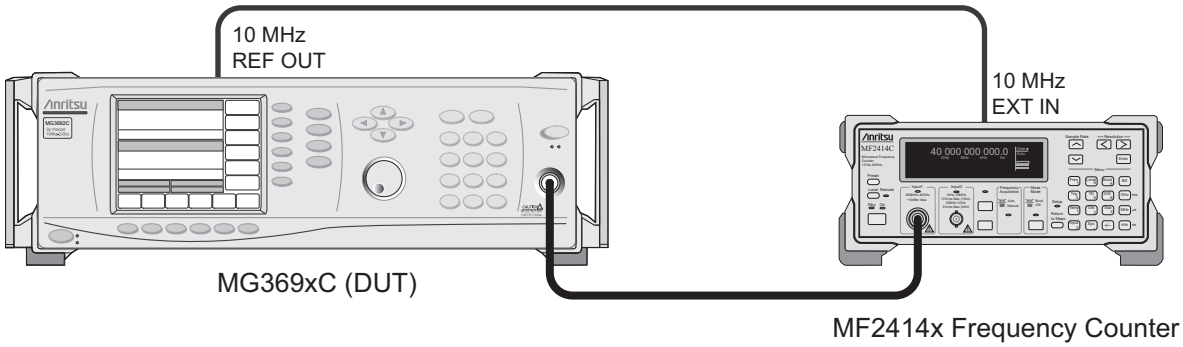

Figure 5-6. Equipment Setup for Frequency Synthesis Tests

Test Setup

Connect the equipment, shown in Figure 5-6, as follows:

1. Connect the MG369xC rear panel 10 MHz REF OUT to the frequency counter's 10 MHz external reference input.
2. Connect the MG369xC RF OUTPUT to the frequency counter Input 1.

Note	Before beginning this calibration procedure, let the MG369xC warm up for a minimum of one hour.

Coarse Loop/YIG Loop

The following procedure tests both the coarse loop and YIG loop by stepping the instrument through its YIG-tuned oscillator's frequency range and measuring the RF output at each step.

1. Set up the MG369xC as follows:
   a. Reset the instrument by pressing **SYSTEM**, then Reset. After reset, the CW menu is displayed.
   b. Press Edit F1 to open the current frequency parameter for editing.
   c. Set F1 to the first test frequency indicated in the test record for the model being tested.
2. Record the frequency counter reading in the test record. The frequency counter reading must be within ±100 Hz of the displayed MG369xC frequency to accurately complete this test.

Note	The frequency counter reading is typically within ±1 Hz because the instruments use a common time base. Differences of a few Hertz can be caused by noise or counter limitations. Differences of ≥ ±100 Hz indicate a frequency synthesis problem.

3. On the MG369xC, use the cursor control key (arrow keys) to increment F1 to the next test frequency in the test record. Record the frequency counter reading in the test record.
4. Repeat step 3 until all frequencies listed in the test record have been recorded.

Fine Loop

The following procedure tests the fine loop by stepping the instrument through ten 100 Hz steps and measuring the RF output at each step.

Caution	When saving calibration data, turning off the instrument before the $ prompt returns to the screen can cause all stored data to be lost.

1. Set up the MG369xC as follows:

   a. Reset the instrument by pressing **SYSTEM**, then Reset. After reset, the CW menu is displayed.

   b. Press Edit F1 to open the current frequency parameter for editing.

   c. Set F1 to the first test frequency indicated in the test record.

2. Record the frequency counter reading in the test record. The frequency counter reading must be within ±10 Hz of the displayed MG369xC frequency to accurately complete this test.

3. On the MG369xC, use the cursor control key (arrow keys) to increment F1 to the next test frequency in the test record. Record the frequency counter reading in the test record.

4. Repeat step 3 until all frequencies listed in the test record have been recorded.

5-9 Switched Filter Shaper

Note	Record completion of the steps in this section in Appendix A, “Test Records (N5531S Test Equipment)” on page A-145 or Appendix B, “Test Records (Standard Test Equipment)” on page B-93.

This procedure provides the steps necessary to adjust the switched filter shaper amplifier gain to produce a more constant level amplifier gain with power level changes.

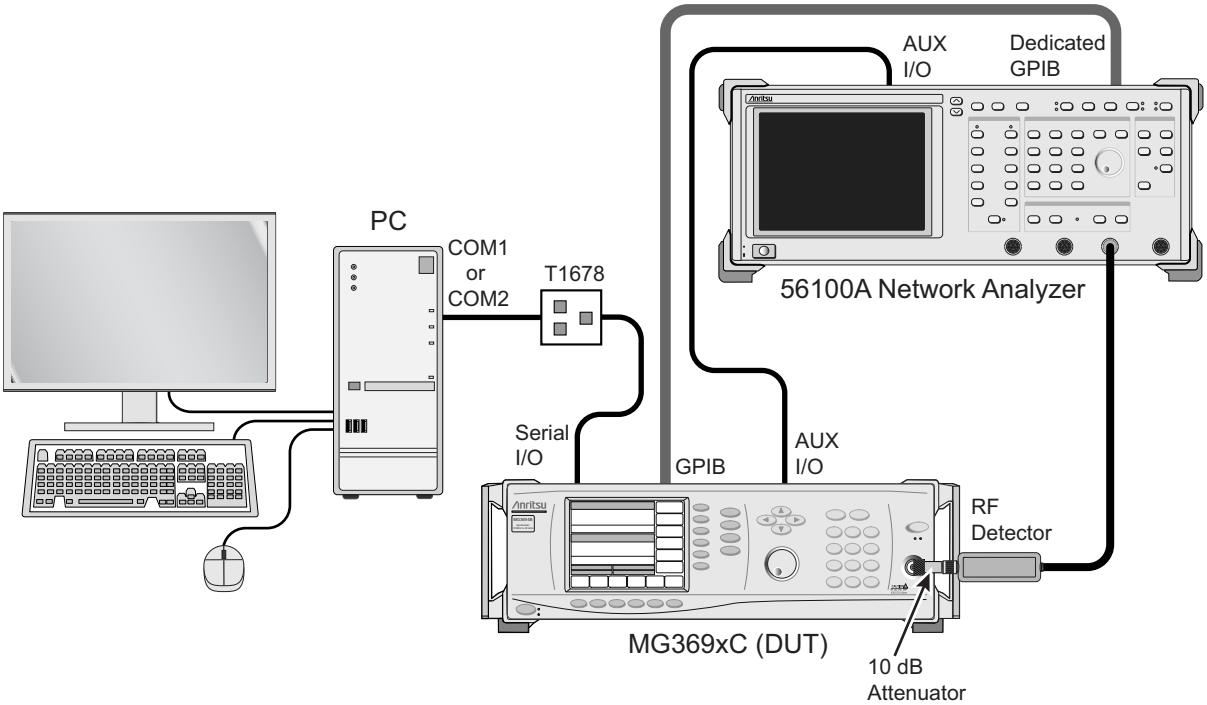

Figure 5-7. Equipment for Switched Filter Shaper Calibration

Equipment Setup

Connect the equipment, shown in Figure 5-7, as follows:

1. Interface the PC to the MG369xC by performing the initial setup procedure, see “Initial Setup” on page 5-6.
2. Using the auxiliary I/O cable, connect the MG369xC rear panel AUX I/O connector to the network analyzer’s AUX I/O connector.
3. Using the GPIB cable, connect the network analyzer’s DEDICATED GPIB connector to the MG369xC IEEE-488 GPIB connector.

Note	In some cases, the unit's GPIB identification needs to be changed to 68/69 ID in order to obtain communication between the MG3690C and the 56100A. To do this press: System | config | GPIB | More | 68/69 ID.

4. Connect the RF detector to the network analyzer Channel A input connector.
5. Connect the MG369xC RF OUTPUT connector to the RF detector via a 10 dB attenuator.

Note	Before beginning this calibration procedure, let the MG369xC warm up for a minimum of one hour.

Log Amplifier Zero Calibration

Before the switched filter shaper amplifier can be adjusted, zero calibration of the ALC log amplifier must be performed to eliminate any DC offsets. Perform ALC log amplifier zero calibration as follows:

1. At the $ prompt on the PC display, type: calterm 115 and press <ENTER>
2. The $ prompt will appear on the screen when ALC log amplifier zero calibration is complete. This can take up to three minutes for a 40 GHz instrument.
3. Record step completion in the test record.

Limiter DAC Adjustment

Note	The following limiter DAC adjustment procedure applies only to MG369xC with Option 15 (high power output). If your instrument does not have this option, check the "Limiter DAC Adjustment" calibration values are set to default. To do this enter calterm 145 and press **Q** at each test (do not change the values) until you exit the calibration. Continue with the procedure: "Shaper DAC Adjustment" on page 5-17.

The following steps in the procedure let you adjust the switched filter limiter DAC which controls the maximum gain of the switched filter shaper amplifier. Each frequency band will be scanned for the maximum unleveled power point before adjustment of the limiter DAC to ensure that the shaper amplifier is not driven to saturation.

1. Set up the 56100A network analyzer as follows:
   - **a.** Press the **System** menu key.
   - **b.** From the System menu display, select RESET.
   - **c.** Press CHANNEL 2 DISPLAY: OFF.
   - **d.** Press CHANNEL 1 DISPLAY: ON.
   - **e.** Press the CHANNEL 1 MENU key.
   - **f.** From the Channel 1 menu display, select POWER.
   - **g.** Press OFFSET/RESOLUTION.
   - **h.** Set the resolution to 5 dB/Div.
   - **i.** Adjust the offset to center the display.
2. Adjust the switched filter limiter DAC for each of the frequency bands as follows:
   - **a.** At the $ prompt on the PC display, type: calterm 145 and press <ENTER>.
   - **b.** On the 56100A network analyzer, set the resolution to 0.2 dB and adjust the offset to center the top of the waveform on the display.
   - **c.** Observe the displayed waveform to determine whether the shaper amplifier is being driven to saturation. This is indicated by a dip in the top of the waveform (Figure 5-8).

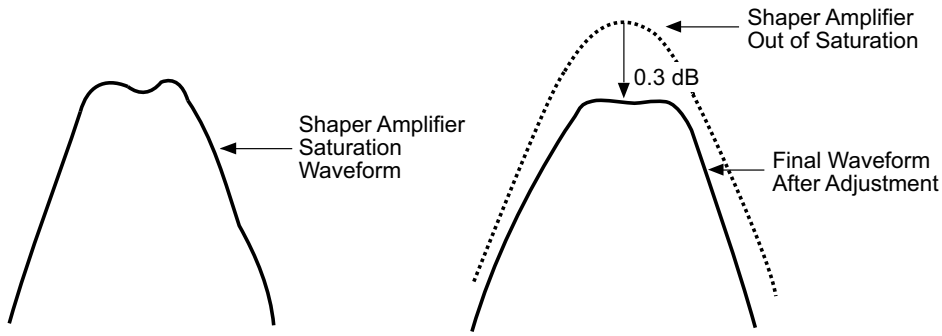

Figure 5-8. Limiter DAC Adjustment Waveforms

d. If the displayed waveform indicates that there is no saturation, proceed to step f. If there is a dip in the waveform, go to step e.

e. On the computer keyboard, use **8**, **9**, or **0** to decrement the value of the DAC's setting until the top of the waveform starts to become rounded at the edges (the shaper amplifier is no longer being driven to saturation). during this process keeping as much power as possible. Continue decrementing until the top of the waveform is 0.3 dB below this point.

f. Press **Q** on the keyboard to go to the next frequency band.

g. Repeat steps c through f until the DAC has been checked and adjusted for all frequency bands.

h. Press **Q** on the keyboard to exit the program. The $ prompt will appear on the screen.

i. Record step completion in the test record.

Shaper DAC Adjustment

The following step in the procedure adjusts the switch filter shaper DAC which controls the gain of the switched filter shaper amplifier. Each frequency band will be scanned for the minimum unleveled power point before automatic adjustment of the shaper DAC.

1. At the $ prompt on the PC display, type: calterm 138 and press <ENTER>. The $ prompt will appear on the screen when the calibration is complete.

Note	The calibration routine may take up to 20 minutes depending on the frequency range of the MG369xC being calibrated.

2. Store the calibration data in non-volatile memory on the A2 CPU PCB as follows:

a. Type: calterm 787 and press <ENTER>. The $ prompt will appear on the screen when the data has been stored.

Caution	When saving calibration data, turning off the instrument before the $ prompt returns to the screen can cause all stored data to be lost.

b. Record step completion in the test record.

5-10 RF Level Calibration

Note	Record completion of the steps in this section in Appendix A, “Test Records (N5531S Test Equipment)” on page A-145 or Appendix B, “Test Records (Standard Test Equipment)” on page B-93.

RF level calibration requires the use of an automated test system. A computer-controlled power meter measures the MG369xC power output at many frequencies throughout the frequency range of the instrument. Correction factors are then calculated and stored in non-volatile memory located on the A2 microprocessor PCB.

RF level calibration is required following replacement of any of the following assemblies:

- A6 ALC PCB
- A3 (only if Option 22 is installed)
- A9 YIG Assembly
- Switched Filter Assembly
- Down Converter Assembly (Option 5)
- Digital Down Converter Assembly (Option 4)
- Switched Doubler Module
- Switched Quadrupler Module
- Forward Coupler
- Directional Coupler
- Step Attenuator
- Diplexers
- Power Amplifier (Option 15x)
- Transfer Switch (Option 20)

The test equipment is listed in Table 5-3.

Table 5-3. Test Equipment List (1 of 3)

Instrument	Critical Specification	Manufacturer/Model	Test Application[a]	Test Equipment Usage [b]
Computer running Windows XP	Can not exceed the following configuration: Pentium 4 2.8 GHz 1 GB RAM 2 Serial ports CDROM Mouse Keyboard Monitor Network The computer must be dedicated during calibration and verification activities.	Dell or other common source	C, P	S, N
National Instrument PCI GPIB card	PCI GPIB card for computer	National Instrument	C, P	S, N

Table 5-3. Test Equipment List (2 of 3)

Instrument	Critical Specification	Manufacturer/Model	Test Application[a]	Test Equipment Usage [b]
Anritsu RF verification and calibration software		Anritsu 2300-497	C, P	S
Power meter	Frequency: 100 kHz to 67 GHz Power range: –70 to +20 dBm	Anritsu model ML2437A/38A	C, P	S
Power sensor for power meter	Frequency: 0.01 GHz to 40 GHz (K) Connector Power range: –70 to +20 dBm	Anritsu model MA2474D	C, P	S
Power sensor for power meter	Frequency: 0.01 GHz to 50 GHz (V) Connector Power range: –70 to +20 dBm	Anritsu model MA2475D	C, P	S
Power sensor for power meter	Frequency: 0.01 GHz to 67 GHz (V) Connector Power range: –30 to +20 dBm	Anritsu model SC7430 **or** Anritsu model SC7570	C, P	S
Power sensor for power meter	Frequency: 100 kHz to 18 GHz (N) Connector Power range: –55 +20 dBm	Anritsu model SC7400	C, P	S
Adapter for power sensor calibration	N(m) to K(f)	Anritsu model 34NKF50	C, P	S
Adapters for power sensor calibration	N(m) to V(f)	Common source **or** Alternate to achieve N(m) to V(f): Anritsu model 34NK50 + 34VKF50 **or** Anritsu model 34NKF50 + 34VK50	C, P	S
Measuring receiver See footnote [c]	Noise floor: < –140 dBm @ 500 MHz	Anritsu model ML2530A	C, P	S
Local oscillator	Frequency: 0.01 to 40 GHz	Anritsu Model MG3694C with options: 3, 4, and 16 (unit must not have options 2B, 15B or 22) **Note:** If the T12579 mixer box is ordered then special SM6191 must be added to LO.	C, P	S
Mixer box (for low level calibration) See footnote [c]	Frequency range: 0.01 GHz to 40 GHz	Anritsu PN: T2579	C, P	S
Low pass filter (Qty = 2) See footnote [c]	1.9 GHz LPF	Mini-Circuits BPL-1.9 or Anritsu PN: 1030-104	C, P	S

Table 5-3. Test Equipment List (3 of 3)

Instrument	Critical Specification	Manufacturer/Model	Test Application[a]	Test Equipment Usage [b]
Attenuator for instrument model numbers MG3691C through MG3694C	Frequency range: DC to 40 GHz Attenuation: 3, 6, 10, and 20 dB (sizes and counts are determined depending on options and maximum output power of instrument)	Anritsu part number SC7879 K set of attenuators (41KC-3, 41KC-6, 41KC-10, 41KC-20) (Must be calibrated - See footnote [d]) **or** Anritsu, model 41KC-3, 41KC-6, 41KC-10 or 41KC-20 (Must be calibrated - See footnote [d])	C, P	S, N
Attenuator for instrument model numbers MG3695C through MG3697C	Frequency Range: DC to 65 GHz Attenuation: 3, 6, 10, and 20 dB (sizes and counts are determined depending on options and maximum output power of instrument)	Anritsu part number SC7880 V set of attenuators (41V-3, 41V-6, 41V-10, 41V-20) (Must be calibrated - See footnote [e]) **or** Anritsu, model 41V-3, 41V-6, 41V-10 and 41V-20 (Must be calibrated - See footnote [e])	C, P	S, N
BNC Tee	Connectors: 50 Ohms BNC	Any common source	C, P	S, N
Generic 50 Ohm BNC RF cables and connectors		Any common source	C, P	S, N
Generic GPIB cables		Any common source	C, P	S, N
Armored Semi Rigid Test Port Cable K(m) to K(m) or semi-rigid cables	K(m) to K(m) flex cables **or** Semi-rigid cables	Anritsu SC3855 K(m) to K(m) flex cable (Must be calibrated - See footnote [d] [f]) **or** Anritsu K120mm-60CM custom semi-rigid cable	C, P	S
Adapter V male to K female	Adapter V(m) to K(f)	Anritsu 34VKF50 (Must be calibrated - See footnote [g])	P, C	S, N
Adapter N male to K female	Adapter N male to K female	Anritsu 34NKF50 (Must be calibrated - See footnote [g])	P, C	S, N
Anritsu Cal Data Save/Recall software		Anritsu P/N 2300-478	C	N/A
Special Serial I/O Cable Assembly	Provides interface between the MG369xC and the PC	Anritsu P/N: T1678	C, P	S, N

a. P = Performance Verification Tests, C = Calibration, T = Troubleshooting
b. S = Standard Test Equipment, N = N5531S Measurement Receiver equipment
c. Only needed if option 2X is installed.
d. Calibrated at the following data points: 100 kHz, 1 MHz, 10 MHz, 100 MHz, 500 MHz to 40 GHz in 500 MHz steps
e. Calibrated at the following data points: 100 kHz, 1 MHz, 10 MHz, 100 MHz, 500 MHz to 67 GHz in 500 MHz steps
f. These cables are not designed for repeated bending. Bend them into the desired shape, then avoid further bending.

g. Calibrated at the following data points: 100 kHz, 1 MHz, 10 MHz, 100 MHz, 500 MHz to 4 GHz in 500 MHz steps.

Note	The T2579 mixer fixture can be built using the information provided in Figure 5-9.

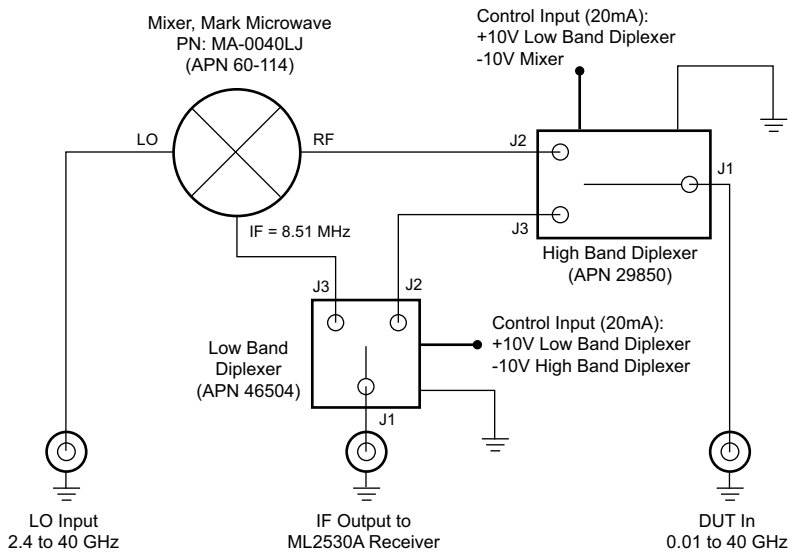

Figure 5-9. T2579 Mixer Fixture Block Diagram

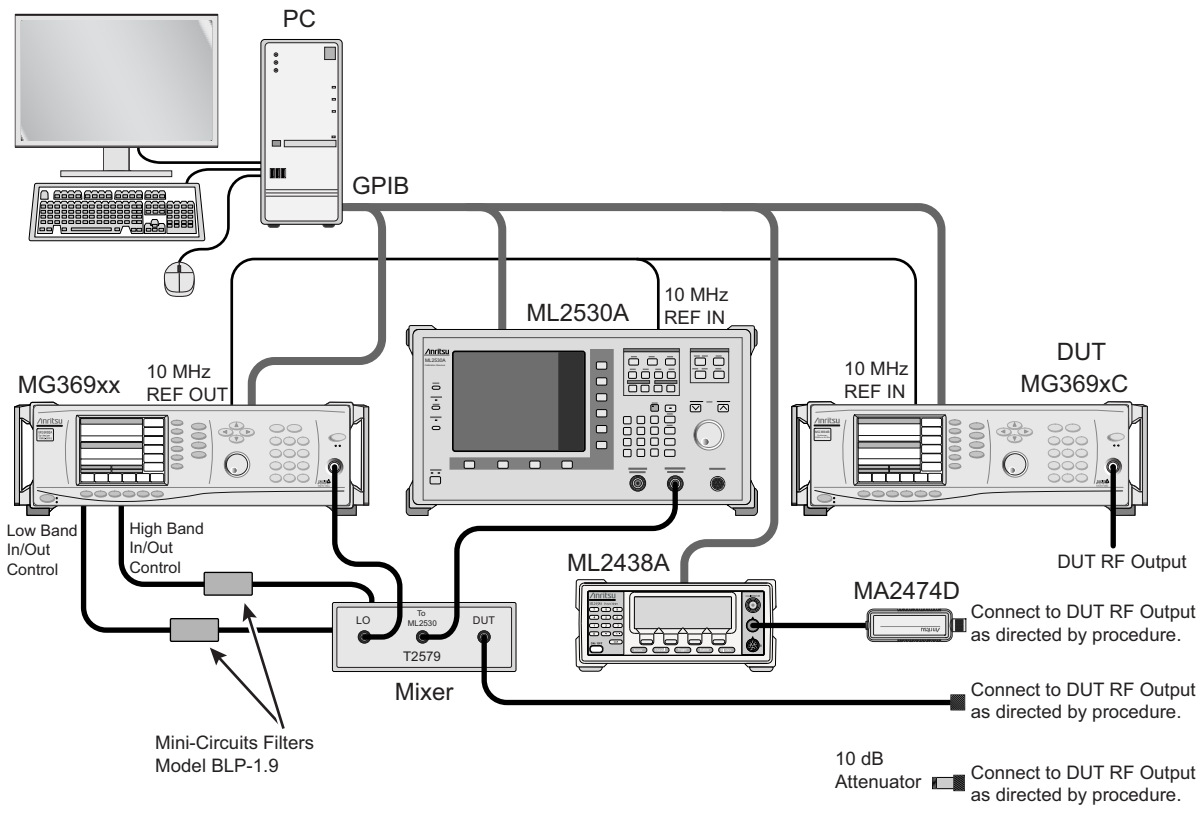

Figure 5-10. Equipment Setup for Level Calibration

Equipment Setup

Connect the equipment, shown in Figure 5-10, as follows:

Note	Before beginning this calibration procedure, always let the MG369xC warm up for a minimum of one hour. Refer to the Local Oscillator's SM6191 documentation for information on connecting the T2579 control lines.

1. Connect the PC IEEE GPIB to the MG369xC, Local Oscillator, Measuring Receiver, and Power Meter.
2. Using a BNC tee, connect the 10 MHz reference output from the local oscillator's 10 MHz REF OUT to the measuring receiver's and MG369xC's 10 MHz reference input connectors.
3. Connect the Rear Panel High/Low and Band In/Out control lines to the Local Oscillator's corresponding rear panel inputs with the Mini-Circuits low pass filters in-line.
4. Connect the RF OUTPUT of the Local Oscillator to the LO port on the T2579, and connect the IF port of the T2579 to the RF Input port of the measuring receiver.
5. Run the Level Calibration software and follow the on-screen prompts.

5-11 ALC Bandwidth Calibration

Note	Record completion of the steps in this section in Appendix A, “Test Records (N5531S Test Equipment)” on page A-145 or Appendix B, “Test Records (Standard Test Equipment)” on page B-93.

This procedure provides the steps necessary to perform ALC Bandwidth calibration. The ALC Bandwidth is adjusted to compensate for gain variations of the modulator. The adjustment is performed for each frequency band. This provides a more consistent bandwidth throughout the frequency range of the instrument.

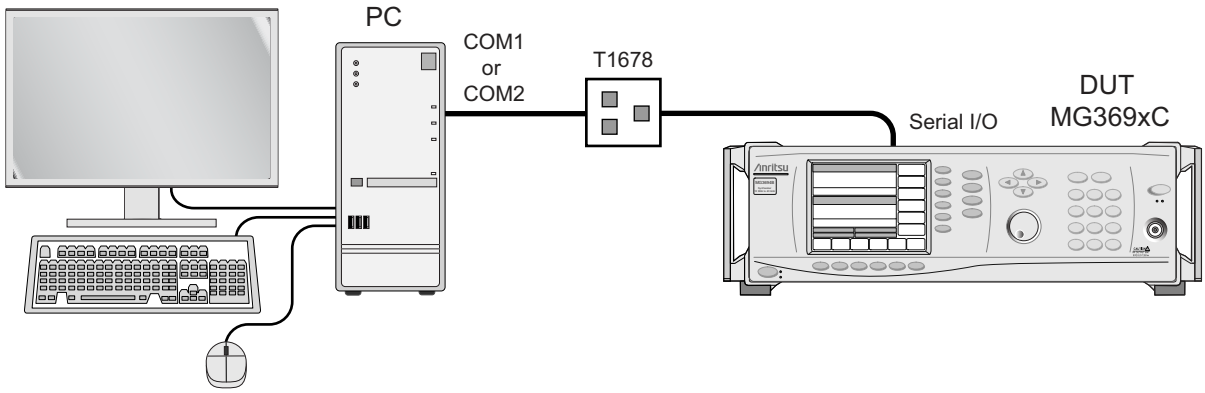

Figure 5-11. Equipment Setup for ALC Bandwidth Calibration

Equipment Setup

Connect the equipment, shown in Figure 5-11, as follows:

1. Interface the PC to the MG369xC by performing the initial setup procedure, see “Initial Setup” on page 5-6.
2. Connect a 50Ω termination to the RF OUTPUT connector.

Note	Before beginning this calibration procedure, *always* let the MG369xC warm up for a minimum of one hour.

Bandwidth Calibration

The following procedure lets you (1) calibrate the ALC bandwidth and (2) store the calibration data in non-volatile memory on the A2 CPU PCB.

1. Enter the ALC bandwidth calibration routine as follows:
   - **a.** At the $ prompt on the PC display, type: calterm 110 and press <ENTER>.
   - **b.** The $ prompt will appear on the screen when the ALC bandwidth calibration is complete. This can take up to 15 minutes depending on the frequency range of the MG369xC.
   - **c.** Record step completion in the test record.
2. Store the calibration data as follows:
   - **a.** At the $ prompt, type: calterm 787 and press <ENTER>. (The $ prompt will appear on the screen when the calibration data has been stored.)
   - **b.** Record step completion in the test record.

Note	When saving calibration data, turning off the instrument before the $ prompt returns to the screen can cause all stored data to be lost.

5-12 ALC Slope Calibration (Option 6 only)

Note	Record completion of the steps in this section in Appendix A, “Test Records (N5531S Test Equipment)” on page A-145 or Appendix B, “Test Records (Standard Test Equipment)” on page B-93.

This procedure provides the steps necessary to perform ALC Slope calibration. The ALC Slope is calibrated to adjust for decreasing output power-vs-output frequency in full band analog sweep.

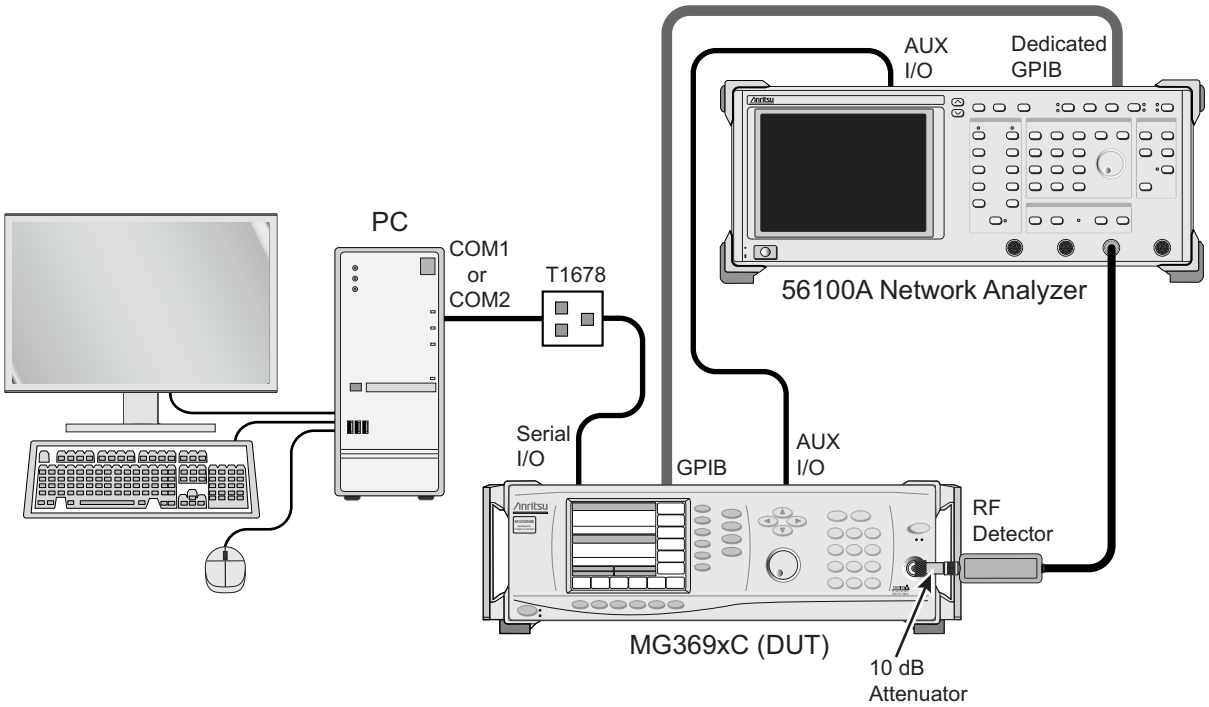

Figure 5-12. Equipment Setup for ALC Slope Calibration

Equipment Setup

Connect the equipment, shown in Figure 5-12, as follows:

1. Interface the PC to the MG369xC by performing the initial setup procedure, see “Initial Setup” on page 5-6.
2. Using the Auxiliary I/O cable (Anritsu PN: 806-7), connect the MG369xC rear panel AUX I/O connector to the 56100A Network Analyzer AUX I/O connector.
3. Using the GPIB cable, connect the 56100A Network Analyzer DEDICATED GPIB connector to the MG369xC IEEE-488 GPIB connector.
4. Connect the RF Detector to the 56100A Network Analyzer Channel A Input connector.

5. Connect the MG369xC RF OUTPUT connector to the RF Detector via a 10 dB Attenuator.

Note	Before beginning this calibration procedure, *always* let the MG369xC warm up for a minimum of one hour.

ALC Slope DAC Adjustment (only for units with Option 6 Analog Sweep)

The following procedure lets you adjust the ALC Slope over individual frequency ranges to compensate for decreasing output power-vs-frequency in analog sweep.

The procedure begins by letting you adjust the ALC Slope for band 0 (0.01 to 2.0 GHz), if installed. It then continues letting you adjust the ALC Slope from 2 GHz to the top frequency of the instrument in up to four bands. The band frequency ranges are:

Band 1: 2.0 to 8.4 GHz
Band 2: 8.4 to 20.0 GHz
Band 3: 20.0 to 40.0 GHz
Band 4: 40.0 to 70.0 GHz

Note	For instruments with Option 4, the frequency range for Band 1 is 2.2 to 8.4 GHz. Skip adjustment of Band 0 as full band analog sweep is not available below 2.2 GHz.

During band 1 thru 3/4 ALC Slope adjustment, the 56100A Network Analyzer display (Figure 5-13) shows the response from 2 GHz to the top frequency of the model, as adjustment is done band by band.

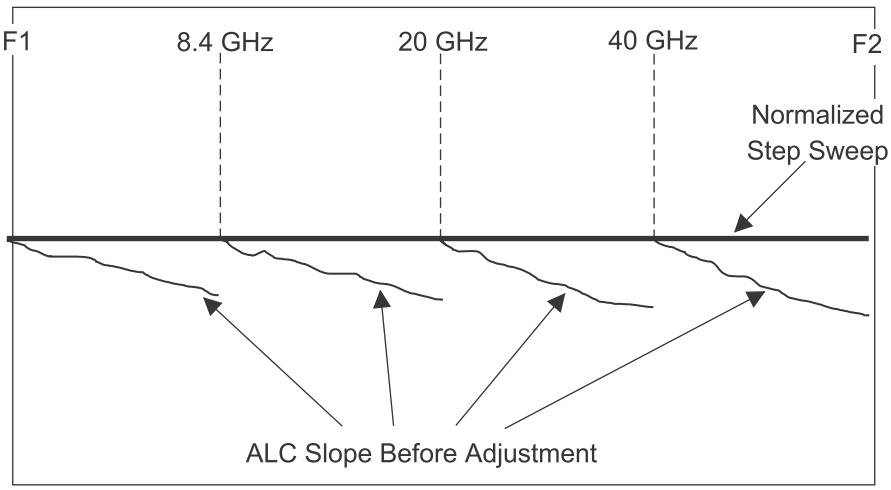

Figure 5-13. ALC Slope Adjustment Waveform Display

1. Set up the 56100A Network Analyzer as follows:
   - **a.** Press the System Menu key.
   - **b.** From the System Menu display, select RESET.
   - **c.** Press CHANNEL 2 DISPLAY: OFF.
   - **d.** Press CHANNEL 1 DISPLAY: ON.
   - **e.** Press CHANNEL 1 MENU key.
   - **f.** From the Channel 1 Menu Display, select POWER and SELECT INPUT (NON-RATIO A).
2. Set up the MG369xC as follows:
   - **a.** Reset the instrument by pressing **SYSTEM** then Reset. After reset the CW Menu is displayed.

b. Press Step Sweep. The Step Sweep Menu is displayed.

c. Press Frequency Control, then Full to select the full frequency range of the instrument being calibrated.

d. Press More, then Number of Steps and set the number of steps to 400.

3. Make the following selections on the 56100A Network Analyzer to normalize the step sweep.

a. Press **MENU** and select TRACE MEMORY on the display.

b. Select TRACE MEMORY STORAGE MENU, then TRACE DATA.

c. Select SUBTRACT MEMORY ON.

d. Press OFFSET/RESOLUTION and set the Resolution to 0.5 dB.

4. On the MG369xC, press Analog Sweep to select the analog sweep mode.

5. Adjust the ALC Slope as follows:

a. At the $ prompt on the PC display, type: slpcal and press <ENTER>.

On the computer keyboard, the adjustment keys are:

Slope (all bands)**E** (Up)**D** (Down)

Offset (band 0, 2 to 4 only)**Q** (Up)**A** (Down)

b. Adjust the ALC Slope so that the power at the start and stop frequencies (of the analog sweep for band 0) match as closely as possible to the normalized straight line in step sweep mode. When completed, press **n** for the next band.

c. Using the Slope and Offset adjustment keys, continue until the ALC Slope for all bands has been adjusted.

d. Type: **X** and press <ENTER> to exit the calibration routine. (The $ prompt will appear on the screen.)

e. Record step completion on the test record.

6. Store the new DACs setting values in non-volatile memory on the A2 CPU PCB as follows:

a. Type: calterm 787 and press <ENTER>. (The $ prompt will appear on the screen when the data has been stored.)

b. Record step completion on the test record.

Caution	When saving calibration data, turning off the instrument before the $ prompt returns to the screen can cause all stored data to be lost.

5-13 AM Calibration

Note	Record completion of the steps in this section in Appendix A, “Test Records (N5531S Test Equipment)” on page A-146 or Appendix B, “Test Records (Standard Test Equipment)” on page B-94.

This procedure provides the steps necessary to perform AM calibration. This consists of calibrating the AM Calibration DAC and the AM Meter circuit. The AM Calibration DAC is calibrated for input sensitivities of 100%/V (linear mode) and 25 dB/V (logarithmic mode) for frequencies ≤ 2 GHz and > 2 GHz (≤ 2.2 GHz and > 2.2 GHz for instruments with Option 4).

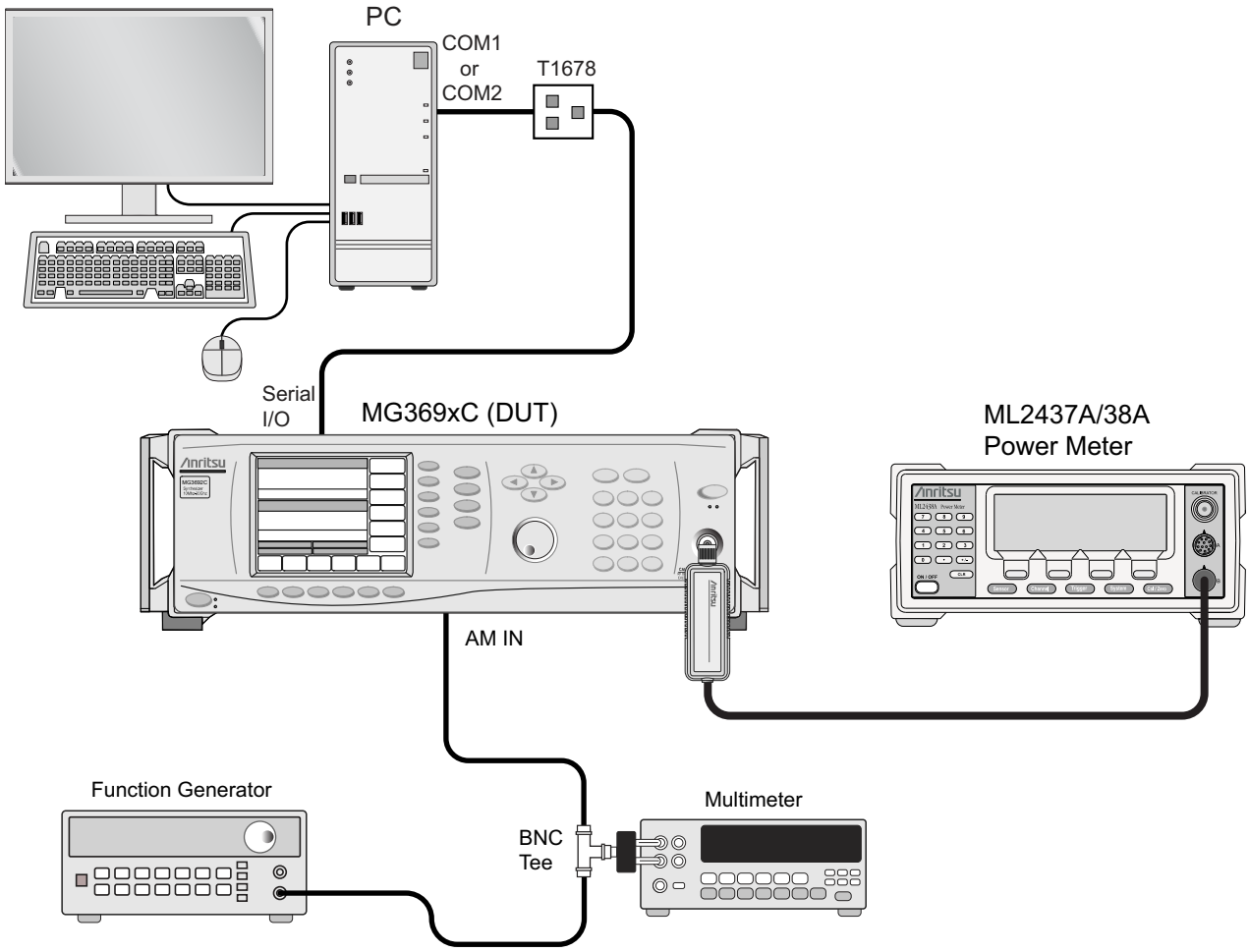

Figure 5-14. Equipment Setup for AM Calibration

Equipment Setup

Connect the equipment, shown in Figure 5-14, as follows:

1. Interface the PC to the MG369xC by performing the initial setup procedure, see “Initial Setup” on page 5-6.
2. Connect the Function Generator Output to the BNC tee. Connect one leg of the BNC tee to the MG369xC rear panel AM IN. Connect the other leg of the BNC tee to the DMM input.
3. Calibrate the Power Meter with the Power Sensor.

4. Connect the Power Sensor to the RF OUTPUT of the MG369xC.

Note	For the ≤ 40 GHz models, use the MA2474D power sensor; for > 40 GHz models, use the MA2475D power sensor.

AM Calibration Procedure

The following procedure lets you (1) adjust the AM Calibration DAC to provide the correct amount of AM in both linear (100%/V sensitivity) and log (25 dB/V sensitivity) modes of operation for frequencies of ≤ 2 GHz and > 2 GHz, (2) calibrate the AM Meter circuit, and (3) store the results in non-volatile memory on the A2 CPU PCB.

Note	Before beginning this calibration procedure, *always* let the MG369xC warm up for a minimum of one hour. For instruments with Option 4 installed, the procedure for Linear AM and Log AM calibration must be performed twice—once for frequencies of ≤ 2.2 GHz and once for frequencies > 2.2 GHz. Upon initial completion of each procedure, the program will automatically return you to the start to repeat the procedure.

1. Set up the Function Generator as follows:
   - **a.** Mode: EXT
   - **b.** Signal: Square Wave
2. Perform Linear AM calibration in HET and main bands as follows:
   - **a.** At the $ prompt on the PC screen, type: calterm 112 and press <ENTER>.
   - **b.** Set the Function Generator to output 0.00 volts. When done, press any key on the keyboard to continue calibration.
   - **c.** Now, set the Function Generator to output ±0.50 volts. Use the COMPL button on the Function Generator to toggle the output between +0.50 volts and –0.50 volts.
   - **d.** On the computer keyboard, use 1, 2 or 3 to increment and 8, 9 and 0 to decrement the value of the DAC's setting to obtain a 9.54 dB difference in the power meter's reading when the Function Generator's output is toggled.
   - **e.** When the DAC has been adjusted, press **Q** on the keyboard to exit the program. When the DAC has been completely adjusted, the program will exit to the $ prompt.
   - **f.** Record step completion on the test record.

Note	To save the calibration data after completing any calibration step, type: calterm 787 and press <ENTER>

3. If unit is MG3693C to MG3697C and the firmware 3.36 or higher perform the Linear AM calibration in the SDM band as follows:
   - **a.** a. At the $ prompt on the PC screen, type: calterm 172 and press <ENTER>.
   - **b.** Set the Function Generator to output 0.00 volts. When done, press any key on the keyboard to continue calibration.
   - **c.** Now, set the Function Generator to output ±0.50 volts. Use the **COMPL** button on the Function Generator to toggle the output between +0.50 volts and –0.50 volts.
   - **d.** On the computer keyboard, use the **1**, **2**, or **3** keys to increment and **8**, **9**, and **0** keys to decrement the value of the DAC's setting to obtain a 9.54 dB difference in the power meter's reading when the Function Generator's output is toggled.

e. When the DAC has been adjusted, press **Q** on the keyboard to exit the program. When the DAC has been completely adjusted, the program will exit to the $ prompt.

f. Record step completion on the test record.

4. Perform Log AM calibration as follows:

a. At the $ prompt, type: calterm 113 and press <ENTER>.

b. Set the Function Generator for a ±0.20 volt output. Use the COMPL button to toggle the output between –0.20 volts and +0.20 volts.

c. On the computer keyboard, us the **1**, **2**, or **3** keys to increment and **8**, **9**, and **0** keys to decrement the value of the DAC's setting to obtain a 10.00 dB difference in the power meter's reading when the Function Generator's output is toggled.

d. When the DAC has been adjusted, press **Q** on the keyboard to exit the program. When the DAC has been completely adjusted, the program will exit to the $ prompt.

e. Record step completion on the test record.

5. If unit is MG3693C to MG3697C and has firmware 3.36 or higher perform the Log AM calibration in the SDM band as follows:

a. At the $ prompt on the PC screen, type: calterm 173 and press <ENTER>.

b. Set the Function Generator for a ± 0.20 volt output. Use the **COMPL** button to toggle the output between –0.20 volts and +0.20 volts.

c. On the computer keyboard, use the **1**, **2**, or **3** keys to increment and **8**, **9**, and **0** keys to decrement the value of the DAC's setting to obtain a 10 dB difference in the power meter's reading when the Function Generator's output is toggled.

d. When the DAC has been adjusted, press **Q** on the keyboard to exit the program. When the DAC has been completely adjusted, the program will exit to the $ prompt.

e. Record step completion on the test record.

6. If the unit has an internal function generator (LF generator option 27 or 28x) perform the AM function generator calibration as follows:

a. At the $ prompt on the PC screen, type: calterm 146 and press <ENTER>.

b. The $ prompt will appear on the screen when the AM function generator calibration is complete. This can take up to 2 minutes depending on the frequency range of the MG369xC.

c. Record step completion in the test record.

7. Perform AM Meter calibration as follows:

a. At the $ prompt, type: calterm 147 and press <ENTER>.

b. Set up the Function Generator for a 1 kHz sine wave with an output level of 0.354 volts RMS (1 volt peak to peak). When done, press any key on the keyboard to continue calibration.

c. The $ prompt will appear on the screen when the calibration is complete.

d. Record step completion on the test record.

8. Store the calibration data as follows:

a. At the $ prompt, type: calterm 787 and press <ENTER>. (The $ prompt will appear on the screen when the calibration data has been stored.)

b. Record step completion on the test record.

Caution	When saving calibration data, turning off the instrument before the $ prompt returns to the screen can cause all stored data to be lost.

5-14 FM and ΦM Calibration

This procedure provides the steps necessary to perform FM and ΦM calibration. This consists of calibrating the FM and ΦM Meter circuit and the FM Gain Control DAC. The FM and ΦM Gain Control DAC is calibrated for input sensitivities in both narrow and wide FM and ΦM modes.

Note	Record completion of the steps in this section in Appendix A, "Test Records (N5531S Test Equipment)" on page A-146, or Appendix B, "Test Records (Standard Test Equipment)" on page B-94.

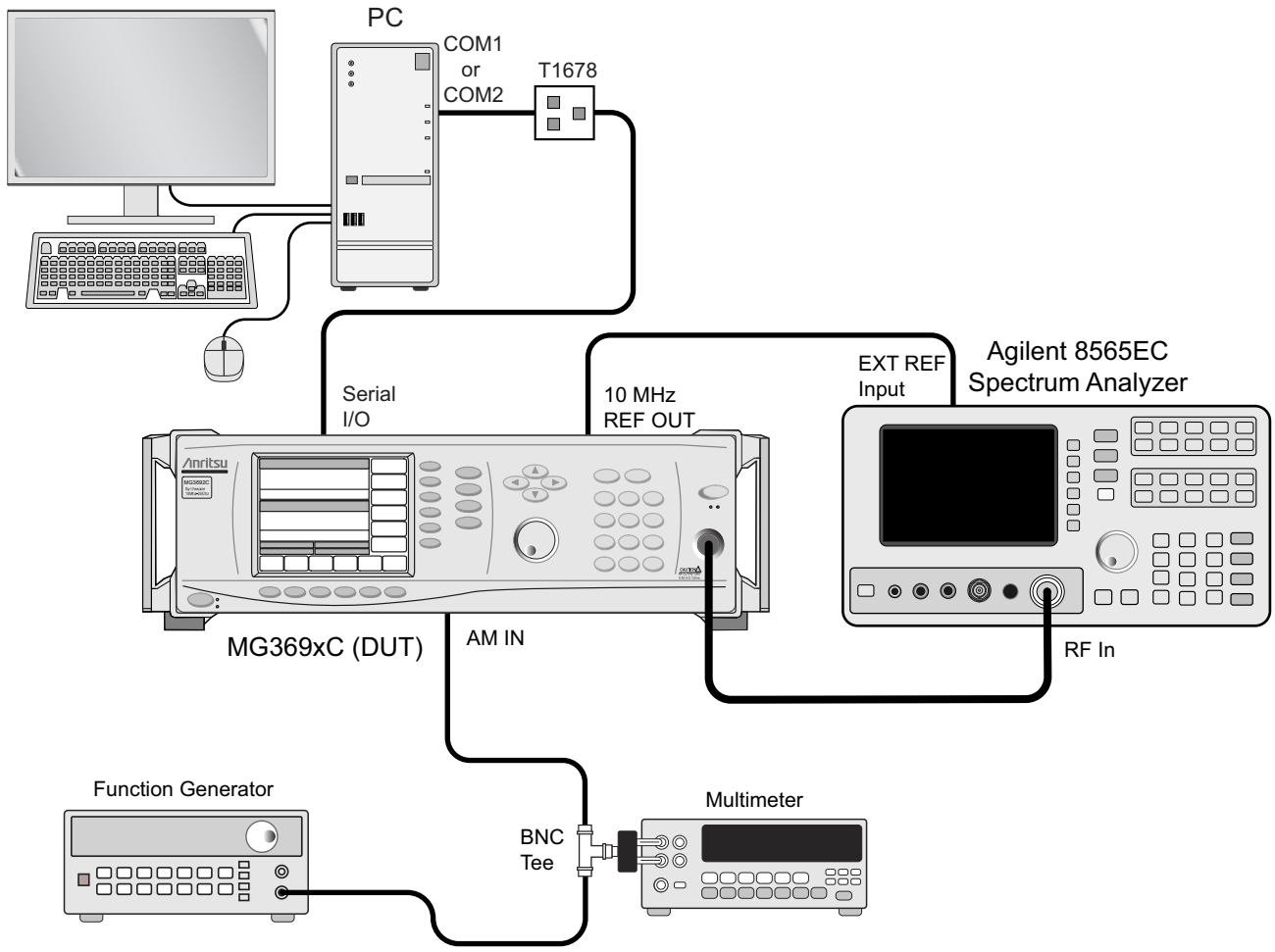

Figure 5-15. Equipment Setup for FM and ΦM Calibration

Equipment Setup

Connect the equipment, shown in Figure 5-15, as follows:

1. Interface the PC to the MG369xC by performing the initial setup procedure, see "Initial Setup" on page 5-6.
2. Connect the MG369xC rear panel 10 MHz REF OUT to the spectrum analyzer External Reference input.
3. Connect the Function Generator Output to the BNC tee. Connect one leg of the BNC tee to the MG369xC rear panel FM IN. Connect the other leg of the BNC tee to the DMM input.
4. Connect the MG369xC RF OUTPUT to the spectrum analyzer RF Input.

Note	Before beginning this calibration procedure, always let the MG369xC warm up for a minimum of one hour.

FM Calibration Procedure

The following steps in the procedure lets you calibrate the following and store the results in non-volatile memory on the A2 CPU PCB.

Note	To ensure an accurate calibration, each step of this procedure must be performed in sequence.

1. FM Variable gain linearity

2. FM Narrow mode sensitivity

3. FM Wide mode sensitivity

4. ΦM External Wide mode sensitivity

5. ΦM External Narrow mode sensitivity

6. ΦM Wide flatness

7. ΦM Narrow flatness

8. FM Meter circuit

9. FM Function generation

Note	To save the calibration data after completing any calibration step, type: calterm 787 and press <ENTER>

1. FM Variable gain linearity calibration is accomplished by adjusting the gain while the input from the function generator is at +1 V DC. Perform the calibration as follows:

- **a.** At the $ prompt, type: calterm 148 and press <ENTER>.
- **b.** Set up the Function Generator for a +1.00 Vdc output (on the 33120 function generator, press and hold the offset button for more then 2 seconds, then adjust to +1 V), verify voltage with DMM and adjust as needed. When done, press any key on the keyboard to continue calibration.
- **c.** The $ prompt will appear on the screen when the calibration is complete.
- **d.** Record step completion on the test record.

2. FM Narrow mode sensitivity calibration is accomplished by adjusting the FM Gain Control DAC to reduce the carrier level as low as possible at frequencies of 5 GHz and 20 GHz. Modulating signal inputs are from the external Function Generator. Perform the calibration as follows:

- **a.** At the $ prompt, type: calterm 125 and press <ENTER>.
- **b.** Set up the Function Generator for a 99.8 kHz sine wave. Adjust the Function Generator to produce a DMM reading of 0.707 volts RMS (2 volts peak to peak) at the FM input.
- **c.** On the spectrum analyzer, set the frequency initial to 5 GHz with the Span of 500 kHz and adjust the reference level if required.
- **d.** On the computer keyboard, use the `, **1**, **2**, and **3** keys to increment and the **7**, **8**, **9**, and **0** keys to decrement the value of the DAC's setting. Start the calibration by pressing an increment key.
- **e.** While observing the first Bessel null (Figure 5-16 on page 5-32) on the spectrum analyzer display, adjust the value of the DAC setting to reduce the carrier level as low as possible.
- **f.** When finished setting the DAC, press **Q** on the keyboard to go to the next calibration step.
- **g.** When the DAC has been completely adjusted, the program will exit to the $ prompt.

h. The $ prompt will appear on the screen when the calibration is complete.

i. Record step completion on the test record.

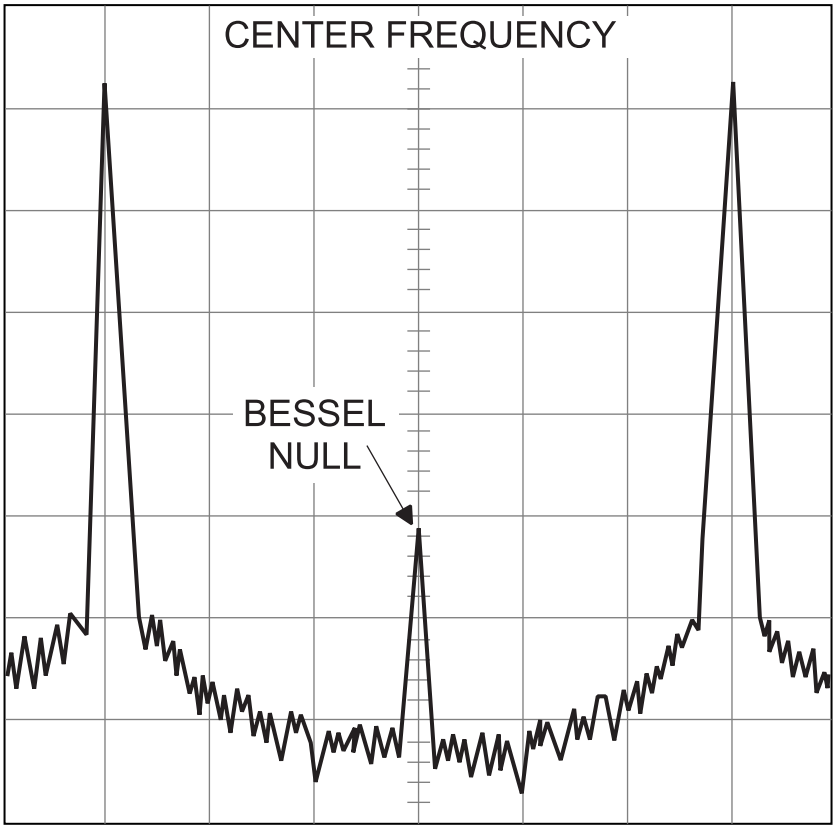

Figure 5-16. Typical Spectrum Analyzer Display of a Bessel Null on an FM Waveform

Note	Figure 5-16 is for example only. During the calibrations the above picture is not viewed because the settings on the spectrum analyzer zoom into the Bessel Null's peak.

3. FM Wide mode sensitivity calibration is accomplished by adjusting the FM Gain Control DAC to obtain 200 MHz FM deviations at frequencies of 5 GHz and 15 GHz. Modulating signal inputs are from the external Function Generator. Perform the calibration as follows:

a. At the $ prompt, type: calterm 124 and press <ENTER>.

b. Set up the Function Generator for a 0.1 Hz square wave with an output level of 2 volts peak to peak.

c. On the spectrum analyzer, set the frequency to 5 GHz at a Span of 250 MHz and a RBW of 100 kHz.

d. You should now see the frequency jumping from ~5.1 GHz to ~4.9 GHz and it should stay at each frequency for approximately 5 seconds.

e. On the computer keyboard, use the `, **1**, **2**, and **3** keys to increment and the **7**, **8**, **9**, and **0** keys to decrement the value of the DAC's setting.

f. While observing the spectrum analyzer display, adjust the value of the DAC's setting to obtain a 200 MHz peak to peak deviation. This is the coarse adjustment.

g. On the spectrum analyzer, set the Span of 50 MHz and adjust the center frequency control to position the low carrier at the center of the display. Note the frequency reading.

h. Adjust the center frequency control to position the high carrier at the center of the display. Note the frequency reading.

i. The difference between these two frequencies is the actual peak-to-peak frequency deviation. It should be 200 MHz ± 8 MHz. If not, fine adjust the value of the DAC's setting to obtain this deviation.

j. When finished setting the DAC, press **Q** on the keyboard to go to the next calibration step (adjusting the DAC to obtain 200 MHz deviation at a frequency of 15 GHz).

k. On the spectrum analyzer, set the frequency to 15 GHz at a Span of 250 MHz and a RBW of 100 kHz.

l. The frequency should jump from ~15.1 GHz to ~14.9 GHz and it should stay at each frequency for approximately 5 seconds.

m. While observing the spectrum analyzer display, adjust the value of the DAC's setting to obtain a 200 MHz peak to peak deviation. This is the coarse adjustment.

n. On the spectrum analyzer, set the Span of to 50 MHz per division and adjust the center frequency control to position the low carrier at the center of the display. Note the frequency reading.

o. Adjust the center frequency control to position the high carrier at the center of the display. Note the frequency reading.

p. The difference between these two frequencies is the actual peak-to-peak frequency deviation. It should be 200 MHz ± 8 MHz. If not, fine adjust the value of the DAC's setting to obtain this deviation.

q. When finished setting the DAC, press **Q** on the keyboard to go to the next calibration step (adjusting the DAC to obtain 200 MHz deviation at 15 GHz). When the DAC has been completely adjusted, the program will exit to the $ prompt.

r. The $ prompt will appear on the screen when the calibration is complete.

s. Record step completion on the test record.

4. ΦM External Wide sensitivity calibration is accomplished by adjusting the ΦM gain control DAC to obtain 2.4 and 14.9 RAD/V at frequencies 5 and 20 GHz. Modulation signal inputs are from the external Function Generator. Perform the calibration as follows:

a. At the $ prompt, type: calterm 149 and press <ENTER>.

b. Set up the Function Generator for a 99.8 kHz sine wave. Adjust the Function Generator to produce a DMM reading of 0.707 volts RMS (2 volts peak to peak) at the FM input.

c. On the spectrum analyzer, set the frequency initially to 5 GHz at a Span of 0 Hz and 10 Hz RBW.

d. On the computer keyboard, use the `, **1**, **2**, and **3** keys to increment and the **7**, **8**, **9**, and **0** keys to decrement the value of the DAC's setting. Start calibration by pressing an increment key.

e. While observing the first Bessel null (Figure 5-16) on the spectrum analyzer display, adjust the value of the DAC's setting to reduce the carrier level as low as possible.

f. When finished setting the DAC, press **Q** on the keyboard to go to the next calibration step.

g. When the DAC has been completely adjusted, the program will exit to the $ prompt.

h. The $ prompt will appear on the screen when the calibration is complete.

i. Record step completion on the test record.

5. ΦM External Narrow sensitivity calibration is accomplished by adjusting the ΦM Gain Control DAC to reduce the carrier level as low as possible at frequencies of 5 GHz and 20 GHz. Modulating signal inputs are from the external Function Generator. Perform the calibration as follows:

a. At the $ prompt on the PC screen, type: calterm 150 and press <ENTER>.

b. Set up the Function Generator for a 99.8 kHz sine wave. Adjust the Function Generator to produce a DMM reading of 0.707 volts RMS (2 volts peak to peak) at the FM input.

c. On the spectrum analyzer, set the frequency initially to 5 GHz at a Span of 0 Hz and 10 Hz RBW. Press any key to continue.

d. On the computer keyboard, use the `, **1**, **2**, and **3** keys to increment and the **7**, **8**, **9**, and **0** keys to decrement the value of the DAC's setting. Start calibration by pressing an increment key.

e. While observing the first Bessel null (Figure 5-16) on the spectrum analyzer display, adjust the value of the DAC's setting to reduce the carrier level as low as possible.

f. When finished setting the DAC, press Q on the keyboard to exit the calibration routine.

g. The $ prompt will appear on the screen when the calibration is complete.

h. Record step completion on the test record.

6. Perform the ΦM Wide flatness calibration as follows:

a. At the $ prompt on the PC screen, type: calterm 155 and press <ENTER>.

b. Set up the Function Generator for a 400 Hz sine wave. Adjust the Function Generator to produce a DMM reading of 0.707 volts RMS (2 volts peak to peak) at the FM input.

c. On the spectrum analyzer, set the frequency initially to 5 GHz at a Span of 0 Hz and 10 Hz RBW. Press any key to continue.

d. On the computer keyboard, use the `, **1**, **2**, and **3** keys to increment and the **7**, **8**, **9**, and **0** keys to decrement the value of the DAC's setting. Start calibration by pressing an increment key.

e. While observing the first Bessel null (Figure 5-16) on the spectrum analyzer display, adjust the value of the DAC's setting to reduce the carrier level as low as possible.

f. When finished setting the DAC, press **Q** on the keyboard to go to the next calibration step.

g. When the DAC has been completely adjusted, the program will exit to the $ prompt.

h. Record step completion on the test record.

7. Perform the ΦM Narrow flatness calibration as follows:

a. At the $ prompt on the PC screen, type: calterm 156 and press <ENTER>.

b. Set up the Function Generator for a 400 Hz sine wave. Adjust the Function Generator to produce a DMM reading of 0.707 volts RMS (2 volts peak to peak) at the FM input.

c. On the spectrum analyzer, set the frequency initially to 5 GHz at a Span of 0 Hz and 10 Hz RBW. Press any key to continue.

d. On the computer keyboard, use the `, **1**, **2**, and **3** keys to increment and the **7**, **8**, **9**, and **0** keys to decrement the value of the DAC's setting. Start calibration by pressing an increment key.

e. While observing the first Bessel null (Figure 5-16) on the spectrum analyzer display, adjust the value of the DAC's setting to reduce the carrier level as low as possible.

f. When finished setting the DAC, press Q on the keyboard to go to exit the calibration routine.

g. When the DAC has been completely adjusted, the program will exit to the $ prompt.

h. Record step completion on the test record.

8. Perform the FM Meter calibration as follows:

a. At the $ prompt on the PC screen, type: calterm 123 and press <ENTER>.

b. Set up the Function Generator for a 100 kHz sine wave. Adjust the Function Generator to produce a DMM reading of 0.707 ±0.001 volts RMS (2 volts peak to peak) at the FM input. When done, press any key on the keyboard to continue calibration.

c. The $ prompt will appear on the screen when the calibration is complete.

d. Record step completion on the test record.

9. Perform the FM Function Generator Calibration as follows:

a. Disconnect the cable from the function generator to the FM/ΦM input.

b. At the $ prompt, type: calterm 154 and press <ENTER>.

c. The $ prompt will appear on the screen when the calibration is complete.

d. Record step completion on the test record.

Caution	When saving calibration data, turning off the instrument before the $ prompt returns to the screen can cause all stored data to be lost.

10. Store the calibration data as follows:

a. At the $ prompt, type: calterm 787 and press <ENTER>. (The $ prompt will appear on the screen when the calibration data has been stored.)

b. Record step completion on the test record.

Chapter 6 — Troubleshooting

Note	Troubleshooting procedures presented in this chapter may require the removal of the instrument's covers to gain access to the test points on the printed circuit boards and other subassemblies.

Warning	Hazardous voltages are present inside the MG369xC whenever AC line power is connected. Turn off the instrument and remove the line cord before removing any covers or panels. Troubleshooting or repair procedures should only be performed by service personnel who are fully aware of the potential hazards. Many subassemblies in the instrument contain static sensitive components. Improper handling of these subassemblies may result in damage to the components. Always observe the static-sensitive component handling precautions.

Caution	**ESD Requirements:** The MG369xC contains components that can be easily damaged by electrostatic discharge (ESD). An ESD safe work area and proper ESD handling procedures that conform to ANSI/ESD S20.20-1999 or ANSI/ESD S20.20-2007 is mandatory to avoid ESD damage when handling subassemblies or components found in the MG369xC instrument. Repair of damage that is found to be caused by electrostatic discharge is not covered under warranty.

6-1 Introduction

This chapter provides information for troubleshooting the MG369xC. The troubleshooting procedures presented in this chapter support fault isolation to a replaceable subassembly or RF component. Remove and replace procedures for the subassemblies and RF components are found in Chapter 7, "Removal and Replacement Procedures". Required calibrations after assembly replacement are shown in Table 5-2 on page 5-5.

6-2 Test Equipment List

The test equipment for the troubleshooting procedures presented in this chapter is listed in Table 1-1 on page 1-6.

6-3 Error Messages

During normal operation, the MG369xC generates error messages to indicate internal malfunctions, abnormal instrument operations, or invalid signal inputs or data entries. It also displays warning messages to alert the operator of conditions that could result in inaccurate MG369xC output. In addition, status messages are displayed to remind the operator of current menu selections or settings.

Self-Test Error Messages

The MG369xC firmware includes internal diagnostics that self-test the instrument. These self-test diagnostics perform a brief go/no-go test of most of the instrument PCBs and other internal assemblies.

You can perform an instrument self-test at any time during normal operation by pressing **SYSTEM** and then the system menu soft key, Self test.

If the MG369xC fails self-test, error messages are displayed on the front panel data display. These error messages describe the malfunction and, in most cases, provide an indication of what has failed. Table 6-1, on the following page, is a summary listing of the self-test error messages. Included for each is a reference to the troubleshooting table that provides a description of the probable cause and a procedure for identifying the failed component or assembly.

Table 6-1. Self-Test Error Messages (1 of 2)

Error Message	Troubleshooting Table	Page Number
Error 100, DVM Ground Offset Failed	Table 6-7	6-14
Error 101, DVM Positive 10V Reference	Table 6-7	6-14
Error 102, DVM Negative 10V Reference	Table 6-7	6-14
Error 107, Sweep Time Clock	Table 6-18	6-19
Error 108, Crystal Oven Cold	Table 6-8	6-15
Error 109, The 100 MHz Reference is not Locked to the External Reference	Table 6-9	6-15
Error 110, The 100 MHz Reference is not Locked to the High Stability 10 MHz Crystal Oscillator	Table 6-10	6-15
Error 112, Coarse Loop Osc Failed or Coarse Loop B Osc Failed (Option 3 or 3x)	Table 6-11 Table 6-12	6-16 6-16
Error 113, YIG Loop Osc Failed	Table 6-15	6-18
Error 114 (Option 5 only), Down Converter LO not Locked	Table 6-16	6-18
Error 115, Not Locked Indicator Failed	Table 6-15	6-18
Error 116, FM Loop Gain Check Failed	Table 6-17	6-19
Error 117, Linearizer Check Failed	Table 6-18	6-19
Error 118, Switch point DAC Failed	Table 6-18	6-19
Error 119, Center Frequency Circuits Failed	Table 6-18	6-19
Error 120, Delta-F Circuits Failed	Table 6-18	6-19
Error 121, Unleveled Indicator Failed	Table 6-19	6-20
Error 122, Level Reference Failed	Table 6-19	6-20
Error 123, Detector Log Amp Failed	Table 6-19	6-20
Error 124, Full Band Unlocked and Unleveled	Table 6-20	6-20
Error 125, 8.4 – 20 GHz Unlocked and Unleveled	Table 6-20	6-20
Error 126, 2 – 8.4 GHz Unlocked and Unleveled	Table 6-20	6-20
Error 127, Detector Input Circuit Failed	Table 6-19	6-20
Error 128, 0.008 – 2 GHz Unleveled or Down Converter Unleveled (Option 4 or 5)	Table 6-22	6-22
Error 129, Switched Filter or Level Detector Failed	Table 6-23	6-24
Error 130, 2 – 3.3 GHz Switched Filter	Table 6-24	6-25
Error 131, 3.3 – 5.5 GHz Switched Filter	Table 6-24	6-25
Error 132, 5.5 – 8.4 GHz Switched Filter	Table 6-24	6-25
Error 133, 8.4 – 13.25 GHz Switched Filter	Table 6-24	6-25
Error 134, 13.25 – 20 GHz Switched Filter	Table 6-24	6-25
Error 135, Modulator or Driver Failed	Table 6-26	6-26
Error 142, Sample and Hold Circuit Failed	Table 6-19	6-20

Table 6-1. Self-Test Error Messages (2 of 2)

Error Message	Troubleshooting Table	Page Number
Error 143, Slope DAC Failed	Table 6-19	6-20
Error 144, RF was Off when Self-test started. Some tests were not performed.	Table 6-30	6-27
Error 145, AM Meter or Associated Circuits Failed	Table 6-31	6-28
Error 147, Internal FM Circuits Failed	Table 6-32	6-28
Error 148, Pulse 40 MHz Reference Circuitry Failed	Table 6-33	6-29
Error 149, Coarse Loop C Osc Failed	Table 6-13	6-17
Error 152, Coarse Loop Module Failed	Table 6-13	6-17
MG369xC Models with SDM		
Error 138, SDM Unit or Driver Failed	Table 6-27	6-26
Error 139, 32 – 40 GHz SDM Section Failed	Table 6-28	6-27
Error 140, 25 – 32 GHz SDM Section Failed	Table 6-28	6-27
Error 141, 20 – 25 GHz SDM Section Failed	Table 6-28	6-27
MG369xC Models with SQM		
Error 136, SQM Unit or Driver Failed	Table 6-34	6-29

Normal Operation Error and Warning/Status Messages

When an abnormal condition is detected during operation, the MG369xC displays an error message to indicate that the output is abnormal or that a signal input or data entry is invalid. It also displays warning messages to alert you of conditions that could cause an inaccurate signal generator output. Status messages to remind you of current menu selections or settings are also generated.

Table 6-2 is a summary list of possible error messages that can be displayed during normal operations. Table 6-3 on page 6-6 is a summary list of possible warning/status messages.

Table 6-2. Possible Error Messages during Normal Operation (1 of 2)

Error Message	Description
ERROR	Displayed on the frequency mode title bar when the output frequency is not phase-locked, an invalid frequency parameter entry causes a frequency range error, or an invalid pulse parameter entry causes a pulse modulation error.
LOCK ERROR	Displayed in the frequency parameters area when the output frequency is not phase-locked. The frequency accuracy and stability of the RF output is greatly reduced. This is normally caused by an internal component failure. Run self-test to verify the malfunction.
RANGE	Displayed in the frequency parameters area when the dF value entered results in a sweep outside the range of the instrument, the step size value entered is greater than the sweep range, the number of steps entered results in a step size of less than 0.01 Hz or 0.01 dB (0.001 mV in linear mode), the step sweep time entered divided by the number of steps entered results in a dwell time of <10 ms, or when the analog sweep start frequency entered is greater than the stop frequency. Entering valid values usually clears the error.
SLAVE	Displayed in the frequency parameters area of the Master MG369xC during master-slave operation in VNA mode when the slave frequency offset value entered results in a CW frequency or frequency sweep outside the range of the slave MG369xC. Entering a valid offset value clears the error.
ERR	Displayed in the modulation status area when one or more of the following error conditions occurs: (1) The external AM modulating signal exceeds the input voltage range. In addition, the message "**Reduce AM Input Level**" appears at the bottom of the AM status display. (2) The external FM (or ΦM) modulating signal exceeds the input voltage range. In addition, the message "**Reduce FM (or ΦM) Input Level**" appears at the bottom of the FM (or ΦM) status display. *Continued on the next page*

Table 6-2. Possible Error Messages during Normal Operation (2 of 2)

Error Message	Description
ERR	*Continued:* (3) A pulse parameter setting is invalid for the current pulse modulation state, as follows: **Pulse Period:** < 50 ns (100 MHz clock), < 125 ns (40 MHz clock), or < 500 ns (10 MHz clock) longer than pulse widths + delays **Single Pulse Mode:** Free Run or Gated Trigger: Width1 > PRI Delayed Trigger: Delay1 + Width1 > PRI **Doublet Pulse Mode:** Free Run Trigger: Width1 > Delay2 *or* Width1 + (Delay2 – Width1) + Width2 > PRI Delayed Trigger: Width1 > Delay2 *or* Delay1 + Width1 + (Delay2 – Width1) + Width2 > PRI External Trigger with or without Delay: Width1 > Delay2 **Triplet Pulse Mode:** Free Run Trigger: Width1 > Delay2 or Width2 > Delay3 *or* Width1 + (Delay2 – Width1) + Width2 + (Delay3 – Width2) + Width 3 > PRI Delayed Trigger: Width1 > Delay2 or Width2 > Delay3 *or* Delay1 + Width1 + (Delay2 – Width1) + Width2 + (Delay3 – Width2) + Width 3 > PRI External Trigger with or without Delay: Width1 > Delay2 or Width2 > Delay3 **Quadruplet Pulse Mode:** Free Run Trigger: Width1 > Delay2 *or* Width2 > Delay3 *or* Width3 > Delay4 *or* Width1 + (Delay2 – Width1) + Width2 + (Delay3 – Width2) + Width3 + (Delay4 – Width3) + Width4 > PRI Delayed Trigger: Width1 > Delay2 *or* Width2 > Delay3 *or* Width3 > Delay4 *or* Delay1 + Width1 + (Delay2 – Width1) + Width2 + (Delay3 – Width2) + Width3 + (Delay4 – Width3) + Width4 > PRI External Trigger with or without Delay: Width1 > Delay2 *or* Width2 > Delay3 *or* Width3 > Delay4

Table 6-3. Possible Warning/Status Messages during Normal Operations

Warning/Status Message	Description
COLD	This warning message indicates that the 100 MHz Crystal oven (or the 10 MHz Crystal oven if Option 16 is installed) has not reached operating temperature. Normally displayed during a cold start of the MG369xC. If the message is displayed during normal operation, it could indicate a malfunction. Run self-test to verify.
UNLEVELED	Displayed when the RF output goes unleveled. Normally caused by exceeding the specified leveled-power rating. Reducing the power level usually clears the warning message. If the warning message is displayed only when AM is selected ON, the modulating signal may be driving the RF output unleveled. Reducing the modulating signal or adjusting the power level usually clears the warning.
UNLOCKED	When Unlocked/Narrow FM or Unlocked/Wide FM is selected ON, this warning message appears indicating that the instrument is not phase-locked during this FM mode of operation.
REDUCE RATE	This warning message is displayed when the AM rate, FM rate, or ΦM rate is set > 1 MHz for a non-sine wave modulating waveform. Amplitude, frequency, or phase modulation of the output signal will continue but the modulating waveform may be distorted.
SLOPE	This status message indicates that a power slope correction has been applied to the ALC.
EXTL REF	This status message indicates that an external 10 MHz signal is being used as the reference signal for the MG369xC.
OFFSET	This status message indicates that a constant (offset) has been applied to the displayed power level.
CW RAMP	This status message appears on all CW menu displays to indicate that the CW ramp has been turned on.
USER 1...5	This status message indicates that a user level flatness correction power-offset table has been applied to the ALC.

6-4 No Error Message

The MG369xC must be operating to run self-test. Therefore, malfunctions that cause the instrument to be non-operational do not produce error messages. These problems are generally a failure of the MG369xC to power up properly. Troubleshooting procedures for these malfunctions are provided below starting with Table 6-4, beginning on page 6-12.

6-5 Troubleshooting Tables

Table 6-4 through Table 6-34, beginning on page 6-12, provide procedures for isolating malfunctions displaying self-test errors to a replaceable subassembly or RF component. In those cases where any of several subassemblies or RF components could have caused the problem, subassembly/RF component replacement is indicated. The recommended replacement order is to replace first the subassemblies/RF components that are most likely to have failed.

Figure 6-1 through Figure 6-5, on the following pages, show the location of the MG369xC connectors and test points that are called out in the troubleshooting procedures of Table 6-4 through Table 6-34.

Caution	**Never** remove or replace a subassembly or RF component with power applied. **Always** remove the power cord before disassembly and removal of any component or PCB. Serious damage to the instrument or personal injury may occur.

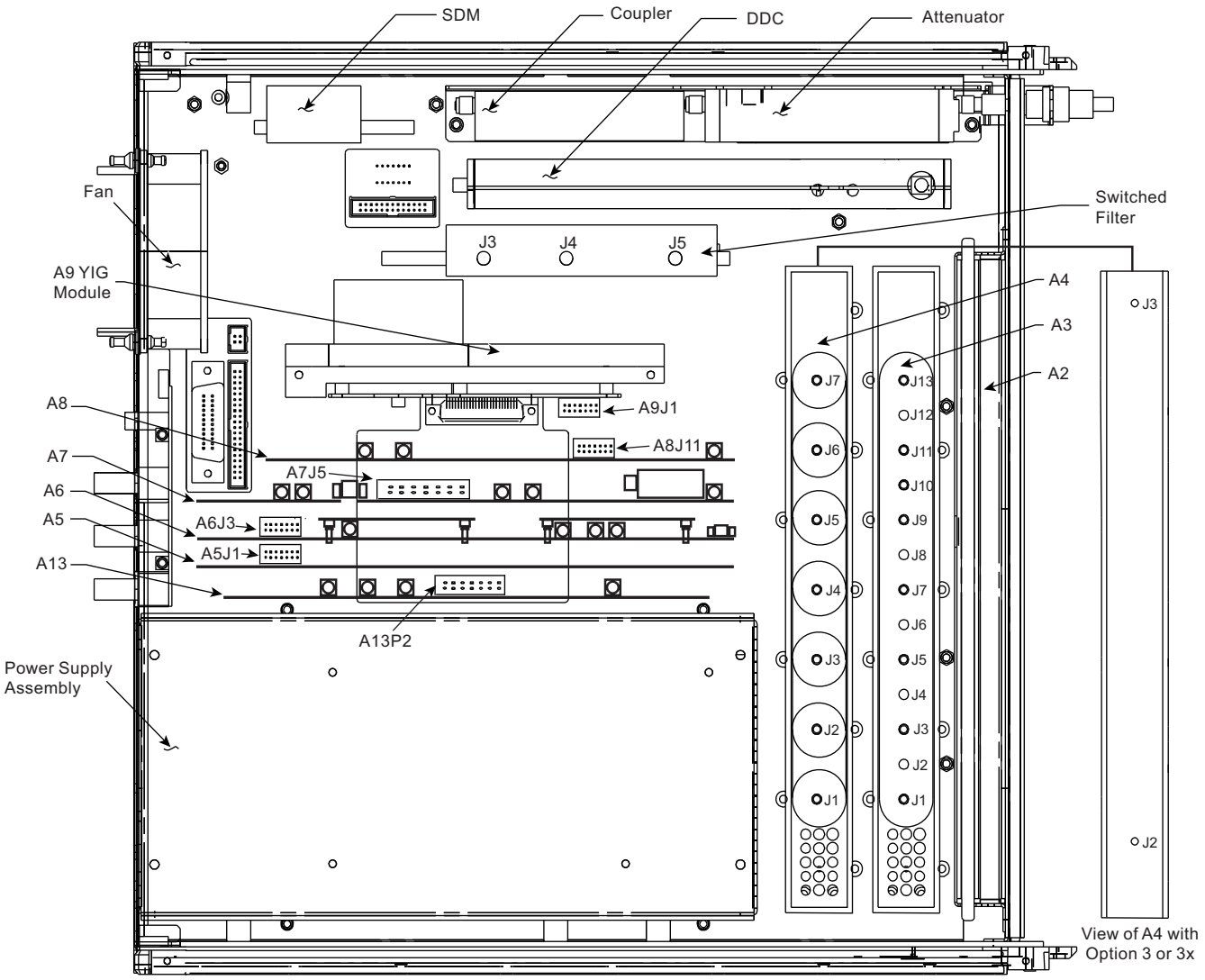

Figure 6-1. Top View of the MG369xC Showing Connector and Test Point Locations

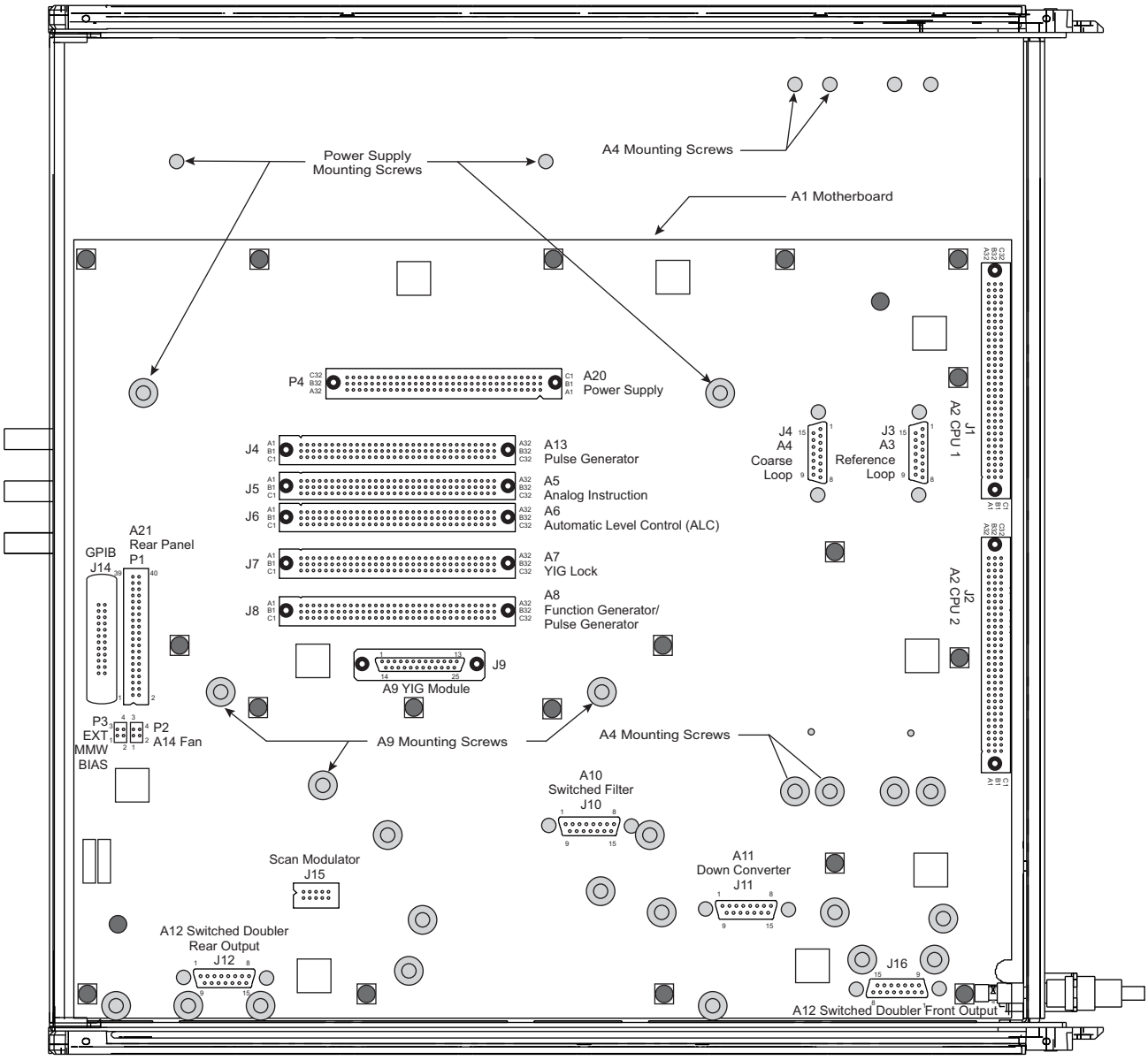

Figure 6-2. Bottom View of the MG369xC Showing Connector and Test Point Locations

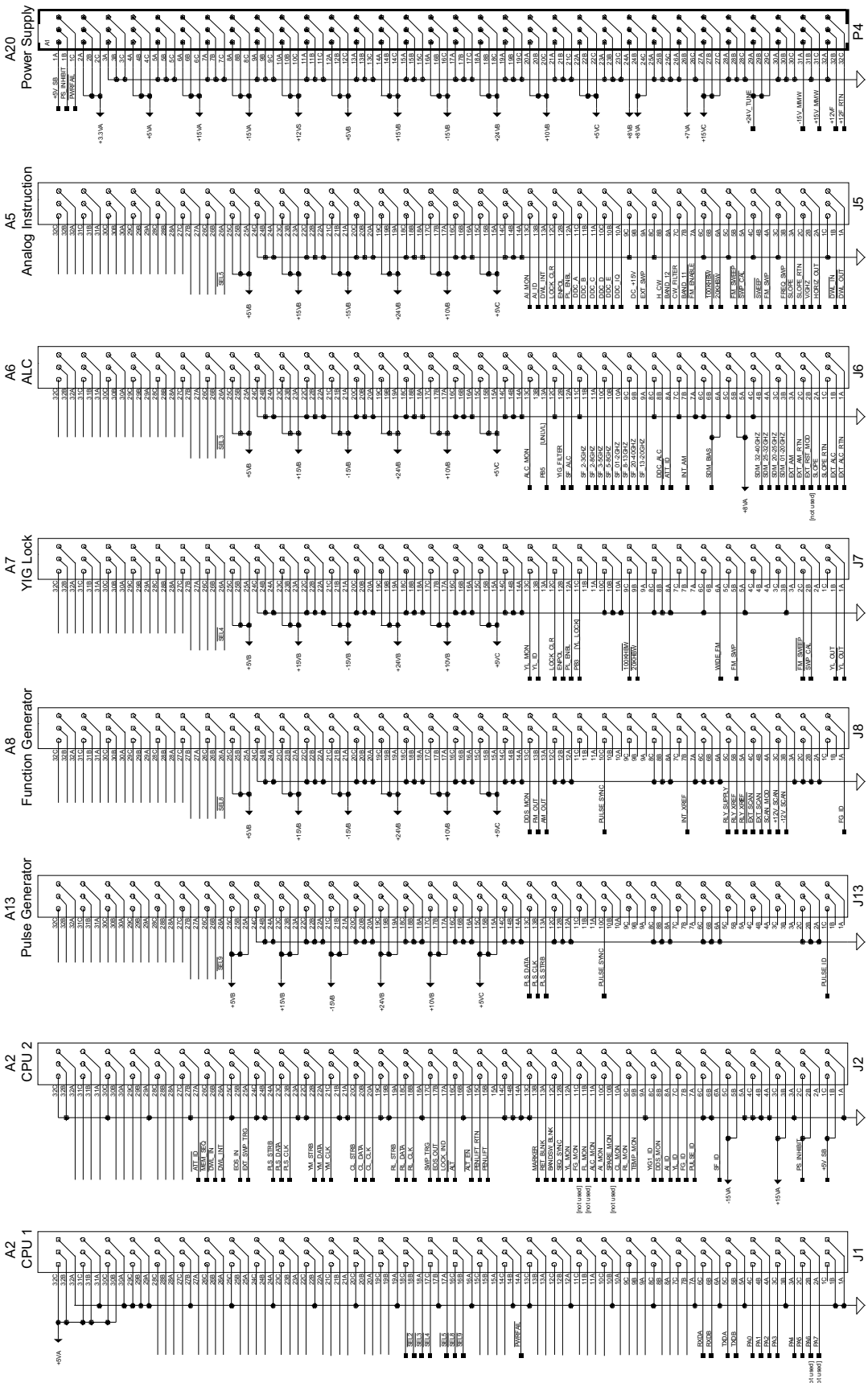

Figure 6-3. Motherboard Connector Pinout Diagram (1 of 2)

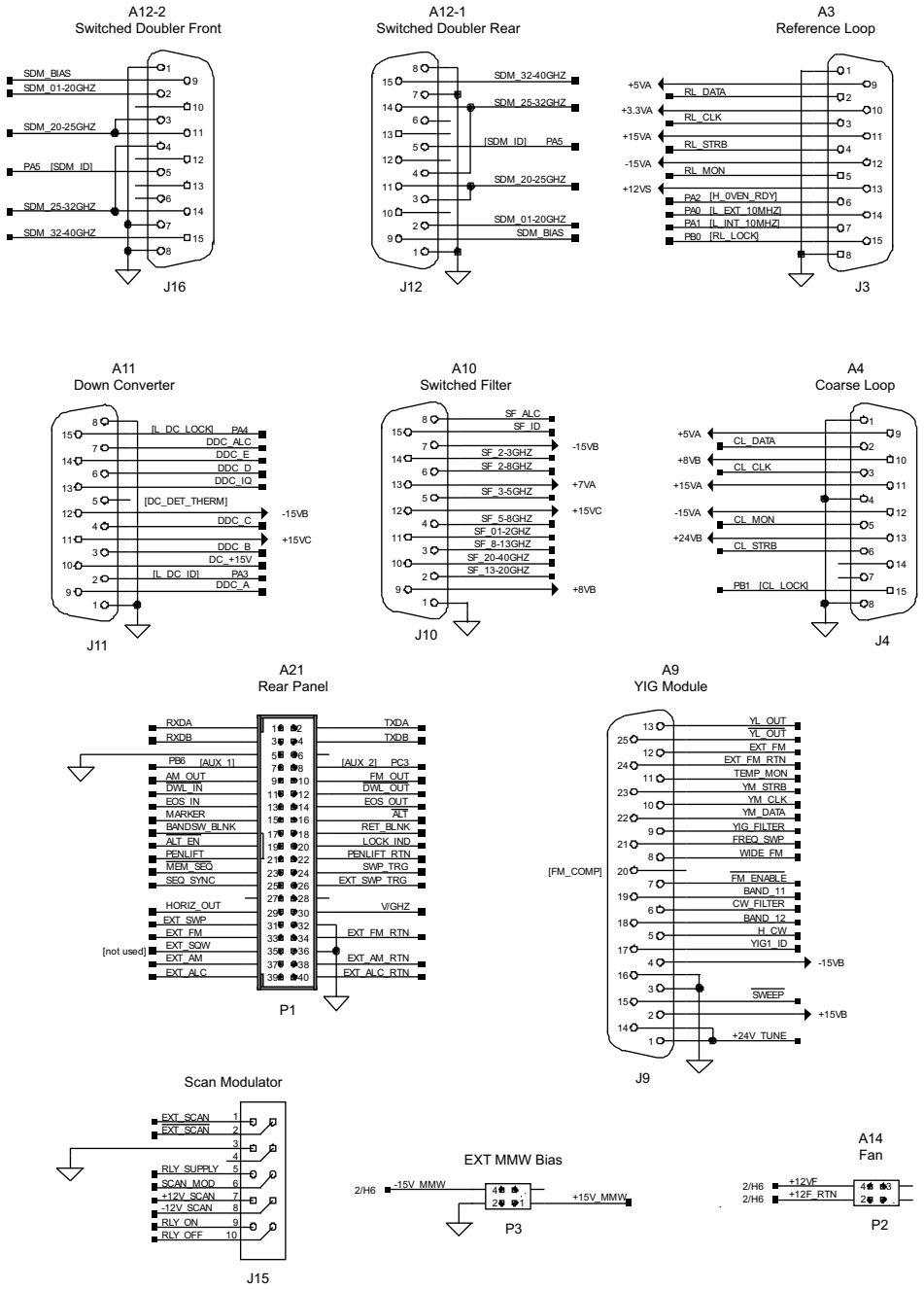

Figure 6-4. Motherboard Connector Pinout Diagrams (2 of 2)

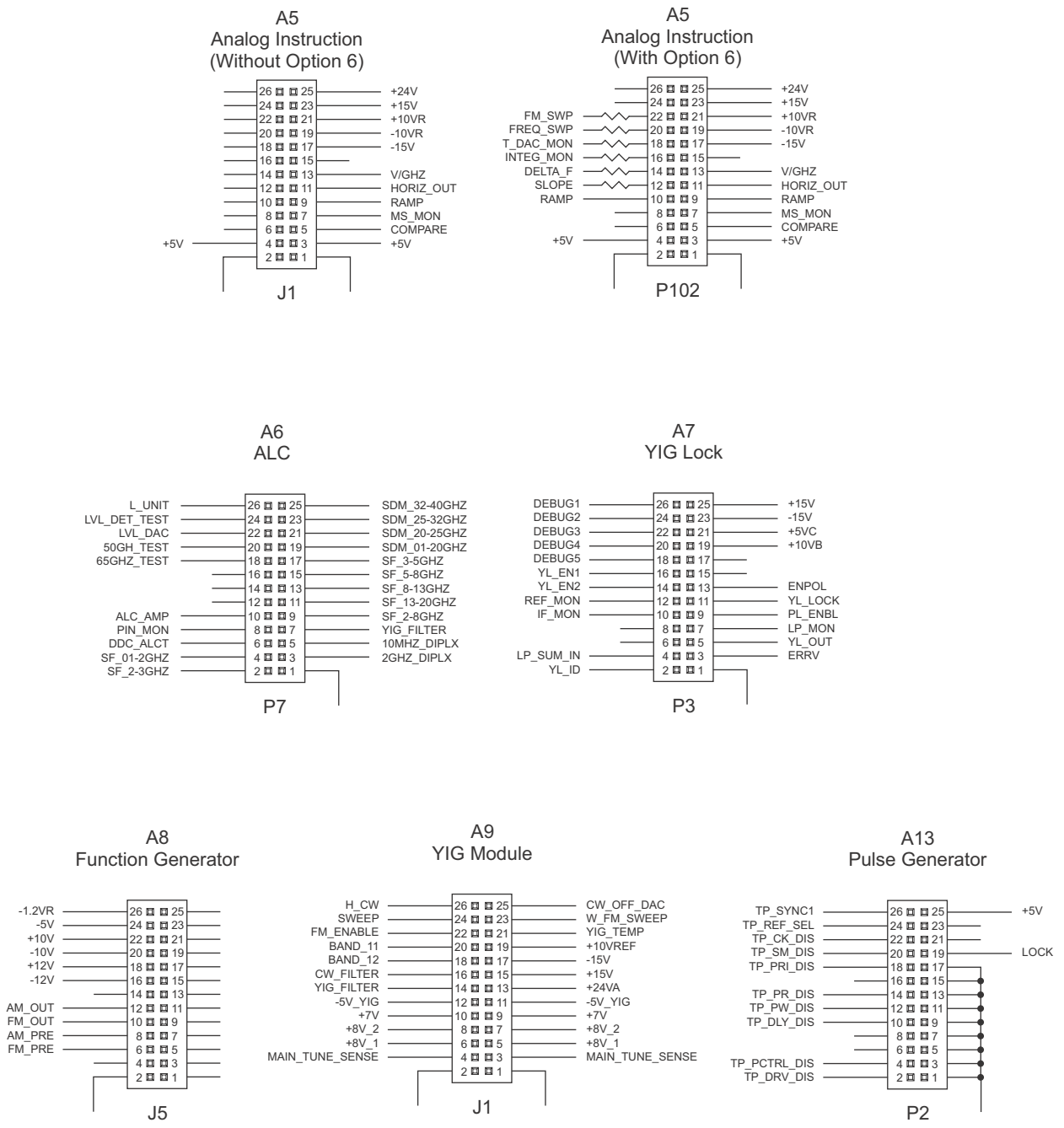

Figure 6-5. PCB Test Point Pinout Diagrams

Table 6-4. Malfunctions Not Displaying an Error Message

MG369xC Will Not Turn On (OPERATE light and FAN are OFF)
Normal Operation: When the MG369xC is connected to the power source and the rear panel line switch is turned on, the OPERATE light should illuminate and the instrument should power up. When the MG369xC is set to standby mode, the fans should run slow and the STANDBY light should illuminate.

1. Disconnect the MG369xC from the power source, then check the line fuses on the rear panel.
   - If the line fuses are good, go to step 2.
   - If the line fuses are defective, replace the fuses.
2. Apply power to the instrument.
   - If the instrument powers up, the problem is cleared.
   - If the instrument fails to power up, go to step 3.
3. Disconnect the MG369xC from the power source, then remove the MG369xC top cover and the cover located over the A5-A9 PCBs.
4. Remove the four outer screws to the top cover of the power supply module and lift the cover with the main power supply attached. Refer to the R&R procedures in Chapter 7, "Removal and Replacement Procedures" as needed.
5. Inspect the ac line supply/switch block and the wiring to the main power supply and standby power supply for defects.
   - If a defect is found, replace as necessary.
   - If no defect is found, go to step 6.
6. Replace the standby and main power supplies.
   - If the instrument powers up, the problem is cleared.
   - If the instrument fails to power up, contact your local Anritsu service center for assistance.

Table 6-5. Malfunctions Not Displaying an Error Message

MG369xC Will Not Turn On (OPERATE light is ON)
Normal Operation: When the MG369xC is connected to the power source and the rear panel line switch is turned on, the OPERATE light should illuminate and the instrument should power up. When the MG369xC is set to standby mode, the fans should run slow and the STANDBY light should illuminate.

1. Remove the MG369xC top and bottom cover and the cover located over the A5-A9 PCBs.
2. Apply power and measure the regulated voltages at A1P4 per Table 6-6 on the following page.
   - If one or more, but not all of the related voltages are out of regulation, a malfunction of the regulation circuitry is indicated. Replace the A20 voltage regulator PCB.
   - If all of the related voltages are out of regulation, a malfunction of the regulator supply source is indicated. Replace the related supply source as shown in Table 6-6.
3. Check for normal operation.
   - If the instrument powers up, the problem is cleared.
   - If the instrument fails to power up, go to step 4.
4. Press the front panel **RF OUTPUT ON/OFF** button.
   - If the red and yellow LEDs toggle, the malfunction may be caused by a failed front panel circuit. Replace the front panel assembly.
   - If the LEDs do not toggle or if both LEDs are lit, the problem may be caused by a CPU malfunction. Replace the A2 PCB.

5. Check for normal operation.

- If the instrument powers up, the problem is cleared.
- If the instrument fails to power up, contact your local Anritsu service center for assistance.

Table 6-6. Power Supply Module Regulated Outputs

A1P4 Pin #	Regulator Output (V)	Related Source
10A	+12	Standby Power Supplies
32B	+12	
1A	+5	
18A	+24	Main Power Supplies (Positive V)
29A	+24	
6A	+15	
14A	+15	
27A	+15	
31C	+15	
20A	+10	
24A	+8	
24B	+8	
26B	+7	
4A	+5	
12A	+5	
22A	+5	
2A	+3.3	
8B	–15	Main Power Supply (Negative V)
16A	–15	
31A	–15	

Table 6-7. Error Messages 100, 101 and 102

Internal DVM Tests
Error 100 DVM Ground Offset Failed, *or* **Error 101 DVM Positive 10V Reference,** *or* **Error 102 DVM Negative 10V Reference**
Description: The DVM circuitry, located on the A2 CPU PCB, is calibrated using the ±10 volts from the reference supplies on the A5 auxiliary PCB. The error messages indicate a calibration-related problem or a defective ±10 volt reference.

1. Perform a manual pre-calibration (Refer to Chapter 5-7, "Preliminary Calibration").

2. Run self-test.

- If no error message is displayed, the problem is cleared.
- If any of the error messages, 100, 101, and 102, are displayed, go to step 3.

3. Connect the negative lead of the digital multimeter to A5J1 pin 1.

4. Measure the ±10V reference voltages at A5J1* pin 19 and A5J1* pin 21. A5J1* pin 19 should be –10V ± 0.036V; A5J1* pin 21 should be +10V ± 0.036V.

*If the A5 PCB is part number 52225-3, measure the voltages at A5P102.

- If the ±10V reference voltages are correct, go to step 5.
- If incorrect, replace the A5 PCB and perform a manual pre-calibration.

Note	Even if the ±10V reference voltages are correct, there could still be a malfunction of the DVM multiplexer on the A5 PCB or the DVM circuitry on the A2 CPU PCB.

5. Replace the A5 PCB, perform a manual pre-calibration and run self-test again.

- If no error message is displayed, the problem is cleared.
- If any of the error messages, 100, 101, and 102, are displayed, go to step 6.

6. Replace the A2 PCB, perform a manual pre-calibration and run self-test.

- If no error message is displayed, the problem is cleared.
- If any of the error messages, 100, 101, and 102, are displayed, contact your local Anritsu service center for assistance.

Table 6-8. Error Message 108

A3 Reference/Fine Loop
Error 108 Crystal Oven Cold
Description: The oven of the 100 MHz and 10 MHz crystal oscillator has not reached operating temperature.

1. Allow a 30 minute warm up, then run self-test.
   - If error 108 is not displayed, the problem is cleared.
   - If error 108 displays, go to step 2.
2. Replace the A3 PCB. Allow a 30 minute warm up, then run self-test.
   - If error 108 is not displayed, the problem is cleared.
   - If error 108 displays, go to step 3.
3. Replace the A2 PCB. Allow a 30 minute warm up, then run self-test.
   - If error 108 is not displayed, the problem is cleared.
   - If error 108 is displayed, contact your local Anritsu service center for assistance.

Table 6-9. Error Message 109

Error 109 The 100 MHz Reference is not phase-locked to the External Reference
Description: The reference loop is not phase-locked to the external 10 MHz reference.

1. Using a coaxial cable with BNC connectors, connect the rear panel 10 MHz REF IN connector to the rear panel 10 MHz REF OUT connector.
2. Disconnect the MCX cable W158 from A3J13.
3. Using an oscilloscope, verify the presence of a 10 MHz signal at the end of the MCX cable W158. The signal amplitude should be > 0.5 volts peak-to-peak (into 50 Ω).
   - If present, replace the A3 PCB.
   - If not present, replace the MCX cable W158.

Table 6-10. Error Message 110

Error 110 The 100 MHz Reference is not Locked to the High Stability 10 MHz Crystal Oscillator
Description: The reference loop is not phase-locked to the optional, high stability 10 MHz crystal oscillator.

1. Replace the A3 PCB.

   If error 110 is not displayed, the problem is cleared.

   If error 110 is displayed, go to step 2.
2. Replace the A2 PCB.

   If error 110 is not displayed, the problem is cleared.

   If error 110 is displayed, contact your local Anritsu service center for assistance.

Table 6-11. Error Message 112

A4 Coarse Loop
Error 112 Coarse Loop Osc Failed (models without Option 3 or 3x)
Description: The coarse loop oscillator is not phase-locked.

1. Disconnect the MCX cable W151 at A4J1 and the MCX cable W188 at A4J7.
2. Using a spectrum analyzer, verify the presence of a +7 dBm ±4 dB, 500 MHz signal at the end of the MCX cable W151 from A4J1 and a 3 dBm ± 3 dB, 100 MHz signal at the end of the MCX cable W188 from A4J7.
   - Reconnect the MCX cables. If present, go to step 5.
   - If one or both of the signals are not present, go to step 3.
3. Disconnect the MCX cable W151 at A3J3 and the MCX cable W188 at A3J7.
4. Using the spectrum analyzer, verify the presence of a +7 dBm ±4 dB, 500 MHz signal at A3J3 and a 3 dBm ±3 dB, 100 MHz signal at A3J7.
   - If the 500 MHz signal is present, replace the MCX cable W151.
   - If the 100 MHz signal is present, replace the MCX cable W188.
   - If either signal is not present, replace the A3 PCB.
5. Reconnect the MCX cables to A3J3 and A1J7, then disconnect the MCX cable W158 at A4J3.
6. Set up the MG369xC to generate the CW frequencies listed in Table 6-12.

Table 6-12. Coarse Loop Frequencies

MG369xC CW Frequency	Measured Frequency at A4J4
2220 MHz (Skip if Option 4 installed)	205 MHz ± 10 kHz
2415 MHz (Skip if Option 4 installed)	245 MHz ± 10 kHz
2545 MHz	215 MHz ± 10 kHz

7. Using a spectrum analyzer, measure the frequency and amplitude of the signal at A4J3 for each of the CW frequencies generated. In each case, the signal amplitude should be +4 dBm ± 6 dB with sidebands at < –50 dBc.
   - If the signals are correct in both frequency and amplitude, go to step 8.
   - If the signals are incorrect, replace the A4 PCB.
8. Reconnect the MCX cable W158 to A4J3 and run self-test again.
   - If error 112 is not displayed, the problem is cleared.
   - If error 112 is still displayed, contact your local Anritsu service center for assistance.

Table 6-13. Error Messages 112, 149, 152

Error 112 Coarse Loop B Osc Failed (models with Option 3 or 3x) **Error 149 Coarse Loop C Osc Failed** **Error 152 Coarse Loop Module Failed**
Description: One of the oscillators within the coarse loop is not phase-locked.

1. Disconnect the MCX cable W153 at A4J1.
2. Using a spectrum analyzer, verify the presence of a +3 dBm ±3 dB, 100 MHz signal at the end of the MCX cable W153.
   - If present, go to step 5.
   - If not present, go to step 3.
3. Disconnect the MCX cable W153 at A3J7.
4. Using the spectrum analyzer, verify the presence of the +3 dBm ±3 dB, 100 MHz signal at A3J7.
   - If present, replace the MCX cable W153.
   - If not present, replace the A3 PCB.
5. Reconnect the MCX cable W153 to A4J1, then disconnect the MCX cable W157 at A4J2.
6. Set up the MG369xC to generate the CW frequencies listed in Table 6-14.

Table 6-14. Coarse Loop Frequencies

MG369xC CW Frequency	Measured Frequency at A4J3
2.215 GHz	205.0 MHz ± 10 kHz
4.415 GHz	495.0 MHz ± 10 kHz
13.190 GHz	945.0 MHz ± 10 kHz

7. Using a spectrum analyzer, measure the frequency and amplitude of the signal at A4J2 for each of the CW frequencies generated. In each case, the signal amplitude should be 0 dBm ±6 dB with sidebands at < –65 dBc.
   - If the signals are correct in both frequency and amplitude, go to step 8.
   - If the signals are incorrect, replace the A4 PCB.
8. Reconnect the MCX cable W157 to A4J2 and run self-test again.
   - If error 112, 149 or 152 is not displayed, the problem is cleared.
   - If error 112, 149 or 152 is still displayed, contact your local Anritsu service center for assistance.

Table 6-15. Error Messages 113 and 115

A7 YIG Loop

Error 113 YIG Loop Osc Failed
Error 115 Not Locked Indicator Failed

Description: Error 113 indicates that the YIG loop is not phase-locked. Error 115 indicates a failure of the not phased-locked indicator circuit.

1. Verify the signal output from the A4 coarse loop PCB by performing steps 5 through 7 in Table 6-11.
   - If the coarse loop signals are correct in both frequency and amplitude, go to step 2.
   - If the coarse loop signals are incorrect, replace the A4 PCB.
2. Verify the signal output from the A3 reference loop PCB by performing steps 1 thru 4 in Table 6-11.
   - If the reference loop signals are correct in both frequency and amplitude, go to step 3.
   - If the reference loop signals are incorrect, replace the A3 PCB.
3. Disconnect the semi-rigid cable at the output port J5 of the switched filter assembly.
4. Set up the MG369xC to generate a CW frequency of 2.000 GHz (for units with option 4 set to 3 GHz).
5. Using a spectrum analyzer, measure the frequency and amplitude of the signal at J5 of the switched filter assembly. The frequency should be 2.000 GHz ± 25 MHz (for units with option 4 set to 3 GHz) and the amplitude should be from –7 to –14 dBm.
   - If the signal is correct in both frequency and amplitude, go to step 6.
   - If the signals are incorrect, replace the switched filter assembly.
6. Repeat steps 4 and 5, incrementing the CW frequency in 1 GHz steps up to 20.000 GHz.
7. If the signals from the coarse loop, reference loop, and switched filter assembly are all correct, replace the A7 YIG loop PCB.
8. Run self-test.
   - If error 113 or 115 are not displayed, the problem is cleared.
   - If either error 113 or 115 are displayed, contact your local Anritsu service center for assistance.

Table 6-16. Error Message 114

A11 Down Converter

Error 114 Down Converter LO not Locked (Option 5 only)

Description: The local oscillator in the down converter assembly is not phase-locked.

1. Disconnect the MCX cable W152 at A3J5.
2. Using a spectrum analyzer, verify the presence of a +7 dBm ±4 dB, 500 MHz signal at A3J5.
   - If present, go to step 3.
   - If not present, replace the A3 PCB.
3. Reconnect the MCX cable W152 to A3J5, then disconnect the MCX cable W152 at J2 of the down converter assembly.
4. Using a spectrum analyzer, verify the presence of a +7 dBm ±4 dB, 500 MHz signal at the end of the MCX cable W152.
   - If present, replace the down converter assembly.
   - If not present, replace the MCX cable W152.

Table 6-17. Error Message 116

A7A1 FM PCB
Error 116 FM Loop Gain Check Failed
Description: The FM loop has failed or the loop gain is out of tolerance.

1. Perform a preliminary calibration (Refer to Chapter 5, "Calibration").
2. Run self-test.
   - If error 116 is not displayed, the problem is cleared.
   - If error 116 is still displayed, go to step 3.
3. Replace the A7A1 PCB and run self-test again.
   - If error 116 is not displayed, the problem is cleared.
   - If error 116 is displayed, contact your local Anritsu service center.

Table 6-18. Error Messages 107, 117, 118, 119, and 120

A5 Analog Instruction PCB
Error 107 Sweep Time Check Failed **Error 117 Linearizer Check Failed** **Error 118 Switch point DAC Failed** **Error 119 Center Frequency Circuits Failed** **Error 120 Delta-F Circuits Failed**
Description: Each of these error messages indicates a problem in the circuitry on the A5 Analog Instruction PCB or the A9 YIG module that provides frequency tuning voltages for the YIG-tuned oscillator.

1. Perform a preliminary calibration (Refer to Chapter 5, "Calibration").
2. Run self-test.
   - If no error message is displayed, the problem is cleared.
   - If error 107, 117, 118, or 120 is displayed, replace the A5 auxiliary PCB.
   - If error 119 is displayed, replace the A9 YIG module.
3. Perform a preliminary calibration and run self-test again.
   - If no error message is displayed, the problem is cleared.
   - If any of the error messages, listed above, is displayed, contact your local Anritsu service center for assistance.

Table 6-19. Error Messages 121, 122, 123, 127, 142, and 143

A6 ALC
Error 121 Unleveled Indicator Failed **Error 122 Level Reference Failed** **Error 123 Detector Log Amp Failed** **Error 127 Detector Input Circuit Failed** **Error 142 Sample and Hold Circuit Failed** **Error 143 Slope DAC Failed**
Description: Error 121 indicates a failure of the circuit that alerts the CPU whenever the RF output power becomes unleveled. Each of the other error messages indicates a problem in the circuitry on the A6 ALC PCB that provides control of the RF output power level.

1. Replace the A6 PCB, and run self-test.
   - If no error message is displayed, the problem is cleared.
   - If error message 121, 122, 123, 127, or 142 is displayed, contact your local Anritsu service center for assistance.
   - If error message 143 is displayed, proceed to step 2.
2. Calibrate the ALC slope (Refer to Chapter 5, “Calibration”).
3. Run self-test.
   - If error 143 is not displayed, the problem is cleared.
   - If error 143 is still displayed, go to step 4.
4. Replace the A6 PCB and run self-test again.
   - If error 143 is not displayed, the problem is cleared.
   - If error 143 is still displayed, go to step 5.
5. Replace the A5 PCB and run self-test again.
   - If error 143 is not displayed, the problem is cleared.
   - If error 143 is still displayed, contact your local Anritsu service center for assistance.

Table 6-20. Error Messages 124, 125 and 126

A9 YIG-tuned Oscillator Module
Error 124 Full Band Unlocked and Unleveled **Error 125 8.4-20 GHz Unlocked and Unleveled** **Error 126 2-8.4 GHz Unlocked and Unleveled**
Description: These error messages indicate a failure of the YIG-tuned oscillator module.

Model MG369xC YIG-tuned Oscillator Failure

1. Connect a 56100A scalar network analyzer to the MG369xC as follows:
   a. Connect the MG369xC AUX I/O to the 56100A AUX I/O.
   b. Connect the 56100A DEDICATED GPIB to the MG369xC IEEE-488 GPIB.
   c. Connect the RF detector to the 56100A Channel A input.
2. Set up the MG369xC as follows:
   a. Frequency: Step Sweep

b. F1: 2.000 GHz (2.21 GHz with Option 4)

c. F2: 20.000 GHz

d. More: Number of Steps: 400

3. Set up the 56100A Scalar Network Analyzer as follows:

a. Press the **SYSTEM MENU** key.

b. From System menu display, select RESET.

c. Press CHANNEL 2 DISPLAY: OFF

d. Press CHANNEL 1 DISPLAY: ON

e. Press the CHANNEL 1 MENU key.

f. From the Channel 1 menu display, select POWER.

4. Using the scalar network analyzer, measure the RF output directly at the YIG-tuned oscillator's output connector. The amplitude of the RF signal should be >4 dBm throughout the full sweep.

- If the RF signal is correct in both frequency and amplitude throughout the full sweep, go to step 9.
- If there is no RF signal for all or part of the sweep or if the amplitude of the RF signal is low, go to step 5.

5. Using the oscilloscope, check for the YIG module power supply voltages shown in Table 6-21 on the next page.

- If the voltages are correct, go to step 6.
- If the voltages are incorrect, refer to the troubleshooting Table 6-6 to determine if the power supply or regulator PCB needs to be replaced.

6. Connect the X input of an oscilloscope to the MG369xC rear panel HORIZ OUT connector.

7. Using the oscilloscope, check for a –0.2 to –3.5 volt YIG tuning ramp at A9J1 pin 3.

- If the ramp signal is correct, go to step 8.
- If the ramp signal is incorrect or not present, replace the A9 YIG module assembly.

8. Using the oscilloscope, check for the YIG-tuned oscillator bias voltages at the test points shown in Table 6-21.

- If the YIG-tuned oscillator bias voltages are correct, replace the A9 YIG module assembly.
- If the YIG bias voltages are incorrect, go to step 9.

9. Perform the preliminary calibration in Section 5-7, then run self-test again.

- If no error message is displayed, the problem is cleared.
- If any of the error messages, listed above, are displayed, contact your local Anritsu service center for assistance.

Table 6-21. YIG Module Assembly Bias Voltages

Test Point	YIG Module Power Supply Bias Voltages
A1J9 pin 1	+24 volts
A1J9 pin 2	+15 volts
A1J9 pin 4	–15 volts

Test Point	YIG-tuned Oscillator Bias Voltages	
	2 to 10 GHz (Band 11)	10 to 20 GHz (Band 12)
A1J9 pin 19	+5 volts (in band)	+0 volts (out of band)
A1J9 pin 18	+0 volts (out of band)	+5 volts (in band)

Table 6-22. Error Message 128

Output Power Level Related Problems (0.008 to 20 GHz)
Error 128 0.01-2 GHz Unleveled or Down Converter Unleveled (Option 4)
Description: Error 128 indicates a failure of the down converter leveling circuitry. The MG369xC may or may not produce an RF output in the 0.01 to 2 GHz frequency range. Thus, there are two troubleshooting paths for this problem-unleveled with output power and unleveled with no/low output power.

Note	The troubleshooting in this section is based on the unit's operational specification of 0.01 to 2 GHz.

Unleveled with Output Power: The warning message UNLEVELED appears on the front panel display.

1. Set up the MG369xC as follows:
   - **a.** Frequency: Step Sweep
   - **b.** F1: 0.01 GHz
   - **c.** F2: 2.000 GHz (2.2 GHz with Option 4)
   - **d.** More: Number of Steps: 400
   - **e.** Previous: L1: +1.00 dBm
   - **f.** Level: ALC Mode: Leveling
   - **g.** Leveling: External Detector
2. Connect a detector to the MG369xC RF OUTPUT connector and connect the detected DC output of the detector to the rear panel EXTERNAL ALC IN connector.
   - If the warning message UNLEVELED no longer appears on the front panel display, replace the down converter
   - If the warning message UNLEVELED is still displayed, replace the A6 PCB

Unleveled with No/Low Output Power:

1. Set up the MG369xC as follows:
   - **a.** Frequency: Step Sweep
   - **b.** F1: 0.01 GHz
   - **c.** F2: 2.000 GHz (2.2 GHz with Option 4)
   - **d.** More: Number of Steps: 400
   - **e.** Previous: L1: +1.00 dBm
   - **f.** Level: ALC Mode: Leveling
   - **g.** Leveling: External Detector
2. Connect the X input of an oscilloscope to the MG369xC rear panel HORIZ OUT connector.
3. Using the oscilloscope, check at the end of the MCX cable W160 that is connected to A6J2 for a > 2.0 volt down converter detector output throughout the full sweep.
   - If the detector voltage is correct, replace the A6 PCB.
   - If the detector voltage is incorrect, go to step 4.
4. Using the oscilloscope, check for a +15 volt down converter bias voltage at A1J11 pin 10.
   - If the bias voltage is correct, go to step 5.
   - If the bias voltage is not correct, replace the A5 PCB.

5. Using the oscilloscope, check for a –2 volt PIN switch drive voltage at A1J10 pin 11. If the MG369xC has a SDM installed, also check for a +20 volt PIN switch drive voltage at A1J6 pin 3B.

- If the PIN switch drive voltages are correct, go to step 6.
- If the PIN switch drive voltages are not correct, replace the A6.

6. Connect a 56100A scalar network analyzer to the MG369xC as follows:

a. Connect the MG369xC AUX I/O to the 56100A AUX I/O.

b. Connect the 56100A DEDICATED GPIB to the MG369xC IEEE-488 GPIB.

c. Connect the RF detector to the 56100A Channel A input.

7. Set up the 56100A scalar network analyzer as follows:

a. Press the **SYSTEM MENU** key.

b. From the System menu display, select RESET.

c. Press CHANNEL 2 DISPLAY: OFF

d. Press CHANNEL 1 DISPLAY: ON

e. Press the CHANNEL 1 MENU key.

f. From the Channel 1 menu display, select POWER.

8. Using the scalar network analyzer with a 10 dB pad, measure the RF output at J3 of the switched filter assembly. The amplitude of the RF signal should be > +17 dBm throughout the full sweep.

- If the amplitude of the RF signal is correct, replace the down converter assembly.
- If there is no RF signal or if the amplitude of the RF signal is low, replace the switched filter assembly.

9. Run self-test again.

- If no error message is displayed, the problem is cleared.
- If any of the error messages, listed above, are displayed, contact your local Anritsu service center for assistance.

Table 6-23. Error Message 129

Error 129 Switched Filter or Level Detector Failed
Description: Error 129 indicates a failure of either the switched filter or level detector circuitry. The MG369xC may or may not produce an RF output in the 2 to 20 GHz frequency range. Thus, there are two troubleshooting paths for this problem-unleveled with output power and unleveled with no/low output power.

Unleveled with Output Power: The warning message UNLEVELED appears on the front panel display):

1. Set up the MG369xC as follows:
   - **a.** Frequency: Step Sweep
   - **b.** F1: 2.000 GHz (2.21 GHz with Option 4)
   - **c.** F2: 20.000 GHz
   - **d.** More: Number of Steps: 400
   - **e.** Previous: L1: +1.00 dBm
   - **f.** Level: ALC Mode: Leveling
   - **g.** Leveling: External Detector
2. Connect a detector to the MG369xC RF OUTPUT connector and connect the detected DC output of the detector to the rear panel EXTERNAL ALC IN connector.
   - If the warning message UNLEVELED no longer appears on the front panel display, replace the directional coupler.
   - If the warning message UNLEVELED is still displayed, replace the A6 PCB.

Unleveled with No/Low Output Power:

1. Set up the MG369xC as follows:
   - **a.** Frequency: Step Sweep
   - **b.** F1: 2.000 GHz (2.21 GHz with Option 4)
   - **c.** F2: 20.000 GHz
   - **d.** More: Number of Steps: 400
   - **e.** Previous: L1: +1.00 dBm
   - **f.** Level: ALC Mode: Leveling
   - **g.** Leveling: External Detector
2. Connect the X input of an oscilloscope to the MG369xC rear panel HORIZ OUT connector.
3. Using the oscilloscope, check the switched filter bias voltages at A1J10 pin13 and A1J10 pin 9. The bias voltage at A1J10 pin 13 should be +7 volts; the bias voltage at A1J10 pin 9 should be +8 volts. If the MG369xC has a SDM installed, also check for a +20 volt PIN switch drive voltage at A1J6 pin 3B.
   - If the bias and the PIN switch drive voltages are correct, go to step 4.
   - If the bias voltages are not correct, refer to the troubleshooting Table 6-5 to determine if the power supply or regulator PCB needs to be replaced.
   - If the PIN switch drive voltage is not correct, replace the A6 PCB.
4. Connect a 56100A Scalar Network Analyzer to the MG369xC as follows:
   - **a.** Connect the MG369xC AUX I/O to the 56100A AUX I/O.
   - **b.** Connect the 56100A DEDICATED GPIB to the MG369xC IEEE-488 GPIB.
   - **c.** Connect the RF detector to the 56100A Channel A input.

5. Set up the 56100A scalar network analyzer as follows:
   a. Press the **SYSTEM MENU** key.
   b. From System menu display, select RESET.
   c. Press CHANNEL 2 DISPLAY: OFF
   d. Press CHANNEL 1 DISPLAY: ON
   e. Press the CHANNEL 1 MENU key.
   f. From the Channel 1 menu display, select POWER.
6. Using the scalar network analyzer with a 10 dB pad, measure the RF output at J2 of the switched filter assembly. The amplitude of the RF signal should be > +15 dBm (> +20 dBm with Option 15) throughout the full sweep.
   - If the amplitude of the RF signal is correct, check for bad RF cables.
   - If there is no RF signal or if the amplitude of the RF signal is low, replace the A10 switched filter assembly.

Table 6-24. Error Messages 130, 131, 132, 133 and 134

Error 130 2-3.3 GHz Switched Filter
Error 131 3.3-5.5 GHz Switched Filter
Error 132 5.5-8.4 GHz Switched Filter
Error 133 8.4-13.25 GHz Switched Filter
Error 134 13.25-20 GHz Switched Filter

Description: Each of these error messages indicates a failure in a switched filter path within the switched filter assembly. The MG369xC may or may not produce an RF output in the frequency range of the failed switched filter path.

1. Set up the MG369xC as follows:
   a. Frequency: Step Sweep
   b. F1: 2.000 GHz (2.21 GHz with Option 4)
   c. F2: 20.000 GHz
   d. More: Number of Steps: 400
   e. Previous: L1: +1.00 dBm
   f. Level: ALC Mode: Leveling
   g. Leveling: External Detector
2. Connect the X input of an oscilloscope to the MG369xC rear panel HORIZ OUT connector.
3. Using the oscilloscope, check for the switched filter PIN switch drive voltages at the test points shown in Table 6-25.
   - If the PIN switch drive voltages are correct, replace the switched filter assembly.
   - If the PIN switch drive voltages are incorrect, replace the A6 ALC PCB.

Table 6-25. Switched Filter Pin Switch Drive Voltages (1 of 2)

Test Point	Active Frequency Range	Active Voltage	Inactive Voltage
A1J10 pin 14	2 to 3.3 GHz	–2.3V	+1.0V
A1J10 pin 5	3.3 to 5.5 GHz	–2.0V	+1.0V
A1J10 pin 4	5.5 to 8.4 GHz	–2.0V	+1.0V
A1J10 pin 3	8.4 to 13.25 GHz	–2.0V	+1.0V

Table 6-25. Switched Filter Pin Switch Drive Voltages (2 of 2)

Test Point	Active Frequency Range	Active Voltage	Inactive Voltage
A1J10 pin 2	13.25 to 20 GHz	–2.0V	+1.0V
A1J10 pin 6	2 to 8.4 GHz	–2.3V	+1.0V

Table 6-26. Error Message 135

Error 135 Modulator or Driver Failed

Description: Error 135 indicates a failure of the modulator in the switched filter assembly or the modulator driver circuitry on the A6 ALC PCB.

1. Replace the A6 PCB and run self-test.
   - If error 135 is not displayed, the problem is cleared.
   - If error 135 is still displayed, go to step 2.
2. Replace the switched filter assembly and run self-test again.
   - If error 135 is not displayed, the problem is cleared.
   - If error 135 is still displayed, contact your local Anritsu service center for assistance.

Table 6-27. Error Message 138

Output Power Level Related Problems

MG369xC Models with SDM (31.8 or 40 GHz)

Error 138 SDM Unit or Driver Failed

Description: Error 138 indicates a failure of the SDM or a failure of the SDM bias regulator or frequency band selection circuitry on the A6 ALC PCB. The MG369xC will not produce an RF output in the 20 to 40 GHz frequency range.

1. Set up the MG369xC as follows:
   a. Frequency: Step Sweep
   b. F1: 20.000 GHz
   c. F2: 40.000 GHz (31.8 GHz for MG3693C)
   d. More: Number of Steps: 400
   e. Previous: L1: +1.00 dBm
   f. Level: ALC Mode: Leveling
   g. Leveling: External Detector
2. Connect the X input of an oscilloscope to the MG369xC rear panel HORIZ OUT connector.
3. Using the oscilloscope, check for a +8 volts SDM bias voltage at A1J5 pin 6A throughout the full sweep.
   - If the SDM bias voltage is correct, replace the SDM.
   - If the SDM bias voltage is not correct, go to step 4.
4. Using the oscilloscope, check for a +8 volts SDM bias voltage at A1J5 pin 5A.
   - If the +8 volt bias is correct, replace the A5 PCB.
   - If the +8 volt bias is not correct, refer to the troubleshooting Table 6-5 to determine if the power supply or regulator needs to be replaced.
5. Run self-test.

6. If error 138 is not displayed, the problem is cleared.

7. If error 138 is still displayed, contact your local Anritsu service center for assistance.

Table 6-28. Error Messages 139, 140 and 141

Error 139 32-40 GHz SDM Section Failed
Error 140 25-32 GHz SDM Section Failed
Error 141 20-25 GHz SDM Section Failed

Description: Each of these error messages indicates a failure in a switched doubler filter path within the SDM. The MG369xC will not produce an RF output in the frequency range of the failed switched doubler filter path.

1. Set up the MG369xC as follows:

- **a.** Frequency: Step Sweep
- **b.** F1: 2.000 GHz
- **c.** F2: 40.000 GHz (31.8 GHz for MG3693C)
- **d.** More: Number of Steps: 400
- **e.** Previous: L1: +1.00 dBm
- **f.** Level: ALC Mode: Leveling
- **g.** Leveling: External Detector

2. Connect the X input of an oscilloscope to the MG369xC rear panel HORIZ OUT connector.

3. Using the oscilloscope, check the PIN switch drive voltages shown in Table 6-29.

- If the PIN switch drive voltages are correct, replace the SDM.
- If the PIN switch drive voltages are not correct, replace the A9 PCB.

Table 6-29. SDM PIN Switch Drive Voltages

Test Point	Active Frequency Range	Active Voltage	Inactive Voltage
A1J16(1) pin 3B	0.008 to 20 GHz	+20V	–15V
A1J16(1) pin 3C	20 to 25 GHz	+20V	–15V
A1J16(1) pin 4A	25 to 32 GHz	+20V	–15V
A1J16(1) pin 4B	32 to 40 GHz	+20V	–15V

1. Connector is labeled J16 for front connector or J12 for rear connector.

Table 6-30. Error Message 144

Error 144 RF was Off when Self-test started. Some tests were not performed

Description: Indicates that some self-tests were not performed because the RF output was selected OFF on the front panel.

1. Press the OUTPUT key on the front panel to turn the RF output ON.

2. Run self-test again. If error 144 is still displayed, contact your local Anritsu service center for assistance.

Table 6-31. Error Message 145

A6 AM Module
Error 145 AM Meter or associated circuitry failed
Description: Indicates a failure of the internal amplitude modulation function. The MG369xC may or may not provide amplitude modulation of the RF output signal using modulating signals from an external source.

1. Set up the MG369xC as follows:
   a. Press **System**, then Reset.
   b. Press **MODULATION**, then AM to go to the Internal AM Status display.
   c. Press On/Off to turn internal amplitude modulation on.
2. Using an oscilloscope, verify the presence of a 10 volt peak-to-peak sine wave signal with a period of 100 µs at the rear panel AM OUT connector.
   - If present, replace the A6A1 module.
   - If not present, replace the A8 PCB.
3. Run self-test again. If error 145 is still displayed, contact your local Anritsu service center for assistance.

Table 6-32. Error Message 147

A7 FM Module
Error 147 Internal FM circuitry failed
Description: Indicates a failure of the internal frequency modulation function. The MG369xC may or may not provide frequency modulation of the RF output signal using modulating signals from an external source.

1. Set up the MG369xC as follows:
   a. Press **System**, then Reset.
   b. Press **MODULATION**, then FM to go to the Internal FM Status display.
   c. Press On/Off to turn internal frequency modulation on.
2. Using an oscilloscope, verify the presence of a 10 volt peak to peak sine wave signal with a period of 10 ms at the rear panel FM OUT connector.
   - If present, replace the A7A1 FM module.
   - If not present, replace the A8 PCB.
3. Run self-test again. If error 147 is still displayed, contact your local Anritsu service center for assistance.

Table 6-33. Error Message 148

Pulse Reference Circuitry
Error 148 Pulse 40 MHz reference circuitry failed.
Description: Indicates a failure of the pulse generator 40 MHz oscillator circuitry. The pulse generator may still function; however, the 40 MHz oscillator is not phase locked to the 10 MHz reference time base. The pulse modulation function may or may not operate. **Error 106 (Power Supply not Phase-locked)** may also be displayed.

1. Disconnect the MCX cable at A13J1 or A8J1 (depending on option configuration).

2. Using an oscilloscope, verify the presence of a 10 MHz at the end of the MCX cable.

- If present, replace the A13 PCB or A8 PCB (depending on option configuration).
- If not present, go to step 3.

3. Reconnect the MCX cable to A13J1 or A8J1 and disconnect the MCX cable at A3J10.

4. Using the oscilloscope, verify the presence of a 10 MHz TTL signal at A3J10.

- If present, replace the MCX cable.
- If not present, replace the A3 PCB.

5. Run self-test again. If error 148 is still displayed, contact your local Anritsu service center for assistance.

Table 6-34. Error Message 136

Output Power Related Problems (> 40 GHz) MG369xC Models with SQM
Error 136 SQM Unit or Driver Failed
Description: Error 136 indicates a failure of the SQM or a failure of the SQM bias regulator or frequency band selection circuitry on the A6 PCB. The MG369xC will not produce an RF output above 40 GHz.

1. Set up the MG369xC as follows:

a. MG369xC Setup:

CW/SWEEP SELECT: Step
F1: 40.0 GHz
F2: 50.0, 60.0, or 70.0 GHz (model dependent)
Number of Steps: 400
L1: -2.0 dBm

2. Connect the X input of an oscilloscope to the MG369xC rear panel HORIZ OUT connector.

3. Using the oscilloscope, check the following voltages:

a. For the MG3695C, check the SQM bias voltages at A6P3 pin 1 and A6P3 pin 5. The bias voltage at A6P3 pin 1 should be +10 volts; the bias voltage at A6P3 pin 5 should be -5 volts.

For the MG3697C, check for a +10 volts SQM bias voltage at A6P3 pin 1.

b. For all models, check for a -2 volt PIN switch drive voltage at A1J10 pin 10.

- If the SQM bias and the PIN switch drive voltages are correct, go to step 4.
- If the pin switch drive or SQM bias voltage(s) is not correct, replace the A6 PCB.

4. Connect a 56100A Scalar Network Analyzer to the MG369xC as follows:

a. Connect the MG369xC AUX I/O to the 56100A AUX I/O.

b. Connect the 56100A DEDICATED GPIB to the MG369xC IEEE-488 GPIB.

5. Set up the 56100A Scalar Network Analyzer as follows:

a. Press the **SYSTEM MENU** display.

b. From System Menu display, select RESET.

c. Press CHANNEL 2 DISPLAY: OFF.

d. Press CHANNEL 1 DISPLAY: ON.

e. Press CHANNEL 1 Menu key.

f. From the Channel 1 Menu display, select POWER.

6. Using the scalar network analyzer, measure the RF output at J4 of the switched filter assembly. The amplitude of the RF signal should be > +18 dBm throughout the full sweep.
   - If the amplitude of the RF signal is correct, replace the SQM.
   - If there is no RF signal or if the amplitude of the RF signal is low, replace the switched filter assembly.
7. Run self-test again. If error 136 is still displayed, contact your local Anritsu service center for assistance.

Chapter 7 — Removal and Replacement Procedures

7-1 Introduction

This chapter provides a table of replaceable parts and procedures for gaining access to the major MG369xC assemblies, subassemblies, and components for troubleshooting or replacement. Replacing most assemblies will require additional adjustments to the instrument. Refer to Table 7-2 for a calibration/verification rework guide.

Warning	Hazardous voltages are present inside the MG369xC whenever AC line power is connected. Turn off the instrument and remove the line cord before removing any covers or panels. Troubleshooting and repair procedures should only be performed by service personnel who are fully aware of the potential hazards.

Caution	**ESD Requirements:** The MG369xC contains components that can be easily damaged by electrostatic discharge (ESD). An ESD safe work area and proper ESD handling procedures that conform to ANSI/ESD S20.20-1999 or ANSI/ESD S20.20-2007 is mandatory to avoid ESD damage when handling subassemblies or components found in the S312D instrument. Repair of damage that is found to be caused by electrostatic discharge is not covered under warranty.

Note	Many assemblies, subassemblies, and components within the MG369xC family of instruments are type and model dependent. Before replacing an assembly, subassembly, or component, always verify the part number of the replacement item. Part numbers can be found in Table 7-1 on the following page. When replacing RF components with SMA, K or V connectors it is important to torque these to the proper value. In the MG369xC unit that setting is 8 in/lbs. You can purchase a Anritsu torque wrench which is set to 8 in/lb. The Anritsu part number is 01-201.

7-2 Replaceable Parts

Anritsu maintains an exchange assembly program for selected MG369xC subassemblies and RF components. If one of these subassemblies malfunction, the defective instrument can be exchanged. All exchange subassemblies and RF components are warranted for 90 days from the date of shipment, or for the balance of the original equipment warranty, whichever is longer.

Please have the exact model number and serial number of your instrument available when requesting this service, as the information about your instrument is filed according to the instrument's model and serial number. For more information about the program, contact your local sales representative or call your local Anritsu service center.

Table 7-1 lists most replaceable parts and assemblies found in the MG369xC. All parts are exchange assemblies except fuses, fans, and front panel Model ID plates.

Table 7-1. MG369xC Replaceable Subassemblies and Part Numbers (1 of 2)

Assembly Numbers	Subassembly or Part Name	Anritsu Part Number	Model or Option List
	Line Fuse (5 Amp Slow Blow)	631-33	All Models
	AC Input Module with EMI Filter	260-23	All Models
	Power Supply, Main	40-147	All Models
	Power Supply, Standby	ND68049	All Models
	Fan Assembly, Power Supply	ND64381	All Models
	Fan Assembly, Rear Panel	ND64382	All Models
	Front Panel Assembly (excluding Model ID plate)	ND71721	All Models
A2	Microprocessor PCB Assembly	ND71722	All Models
A3	Reference/Fine Loop PCB Assembly	ND68039	no 3/3x And 16
A3	Reference/Fine Loop PCB Assembly	ND70912	3, no 16
A3	Reference/Fine Loop PCB Assembly	ND68041	16, no 3/3x
A3	Reference/Fine Loop PCB Assembly	ND70914	3 and 16
A3	Reference/Fine Loop PCB Assembly	ND70911	3x, no 16
A3	Reference/Fine Loop PCB Assembly	ND70913	3x and 16
A4	Coarse Loop PCB Assembly	ND70915	no 3 or 3x
A4	Coarse Loop PCB Assembly	ND70916	3 or 3x
A5	Auxiliary PCB Assembly	ND71723	no 6
A5	Analog Instruction/Auxiliary PCB Assembly	ND71724	6
A6	ALC PCB Assembly	ND66804	All Models
A6A1	AM Module	ND71725	14 or 28x
A6A2	Power Meter Module	ND71726	8
A7	YIG Lock PCB Assembly with Sampler, Standard	ND71714	no 3 or 3x
A7	YIG Lock PCB Assembly with Sampler, Option 3	ND71715	3 or 3x
A7A1	FM Module	ND71727	12 or 28x
A8	Function Generator PCB Assembly	ND66805	27 or 28x
A9	YIG Module (2-10 GHz)	ND70917	MG3691C
A9	YIG Module (2-20 GHz)	ND70918	All Models except MG3691C
A11	Digital Down Converter Assembly	ND55519	4
A11	Down Converter Assembly	D27330	5
A20	Regulator PCB Assembly	52236-3	All Models
A21	Rear Panel PCB Assembly	52266-3	All Models
	Leveling Coupler, 40 GHz	ND60339	All Models except MG3695C and MG3697C
	Leveling Coupler, 65 GHz	ND60340	MG3695C and MG3697C
	Switched Filter	D45198	no 26x
	Switched Filter, Pulsed	D45200	26x
	Output Connector, VF	C27300	MG3695C and MG3697C
	Output Connector, KF	C27310	All Models except MG3695C and MG3697C
	Switched Doubler Module	70982	no MG3691C or MG3692C

Table 7-1. MG369xC Replaceable Subassemblies and Part Numbers (2 of 2)

Assembly Numbers	Subassembly or Part Name	Anritsu Part Number	Model or Option List
	Switched Doubler Module	47520	no MG3691C or MG3692C and Opt 15B/C/D
	Step Attenuator, 20 GHz	D27152	2A
	Step Attenuator, 40 GHz	D25080	2B
	Step Attenuator, 65 GHz	D28957	2C
	Electronic Step Attenuator	45720	2E
	2 to 20 GHz Amplifier	61854	15A
	2 to 50 GHz Amplifier and A14 Amplifier Bias PCB Assembly	ND71731	15B/C/D
	Source Quadrupler Module, 50 GHz	ND72036	MG3695C
	Source Quadrupler Module, 70 GHz	ND67167	MG3697C
	Source Quadrupler Module, 70 GHz High power	ND67168	15D and MG3697C
	37 GHz High Pass Filter	49247	MG3695C
	16.8 GHz Low Pass Filter with 6 dB pad	B28612	MG3697C
	70 GHz Forward Coupler	C27184	MG3697C
	Mixer, 40 GHz	60-276	7
	Scan Modulator	3-1010-113	20
	Transfer Switch	1020-61	20
	Diplexing Switch	ND64379	22 or 4/5 or 15A or 15B
	Diplexing Switch High Frequency	65902	22 or 4/5 or 15C or 15D
	Lo-Band Diplexing Switch	ND64380	22

Table 7-2. Calibration/Verification Rework Guide (1 of 3)

Assembly	Calibration/Verification Procedure	Section Number
A2 Processor (Data Recovered)	Preliminary Calibration	5-7
A2 Processor (Data Unrecovered)	Preliminary Calibration	5-7
	Switched Filter Shaper Calibration	5-9
	RF Level Calibration and Verification	3-9 or 4-10 and 5-10
	ALC Bandwidth Calibration	5-11
	Frequency Modulation Calibration and Verification	3-10 or 4-11 and 5-14
	AM Calibration and Verification	3-11 or 4-12 and 5-13
A3 Reference/Fine Loop A4 Coarse Loop	Preliminary Calibration	5-7
	Spurious Signals Verification	3-7 or 4-8
	Phase Noise Verification	3-8 or 4-9
A5 Analog Instruction or Auxiliary	Preliminary Calibration	5-7
	Frequency Modulation Calibration and Verification	3-10 or 4-11 and 5-14

Table 7-2. Calibration/Verification Rework Guide (2 of 3)

Assembly	Calibration/Verification Procedure	Section Number
A6 ALC	Switched Filter Shaper Calibration	5-9
	RF Level Calibration or Verification	3-9 or 4-10 and 5-10
	ALC Bandwidth Calibration	5-11
	ALC Slope Cal (option 6 only)	5-12
	AM Calibration and Verification	3-11 or 4-12 and 5-13
	Pulse Modulation Verification	3-12 or 4-13
A7 YIG Lock/Sampler	Frequency Modulation Calibration and Verification	3-10 or 4-11 and 5-14
	Spurious Signals Verification	3-7 or 4-8
	Phase Noise Verification	3-8 or 4-9
A8 Internal Generator (Option 27)	Frequency Modulation Calibration and Verification	3-10 or 4-11 and 5-14
	AM Calibration and Verification	3-11 or 4-12 and 5-13
	Pulse Modulation Verification	3-12 or 4-13
A9 YIG Module Switched Filter or High Power (Option 15) Het Down Converter (Option 5) Digital Down Converter (Option 4)	Preliminary Calibration	5-7
	Switched Filter Shaper Calibration	5-9
	RF Level Calibration or Verification	3-9 or 4-10 and 5-10
	ALC Bandwidth Calibration	5-11
	Frequency Modulation Calibration and Verification	3-10 or 4-11 and 5-14
	AM Calibration and Verification	3-11 or 4-12 and 5-13
	Pulse Modulation Verification	3-12 or 4-13
	Phase Noise Verification	3-8 or 4-9
	ALC Slope Cal	5-12
	Spurious Signals Verification	3-7 or 4-8
A7A1 FM/Phase Modulation Module (Option 12)	Preliminary Calibration	5-7
	Frequency Modulation Calibration and Verification	3-10 or 4-11 and 5-14
	Spurious Signals Verification	3-7 or 4-8
	Phase Noise Verification	3-8 or 4-9
A6A1 AM Module (Option 14)	Preliminary Calibration	5-7
	RF Level Calibration or Verification	3-9 or 4-10 and 5-10
	AM Calibration and Verification	3-11 or 4-12 and 5-13
IF Up-Conversion (Option 7) Power Monitor (Option 8) Rear Panel Output (Option 9) Output Connector	RF Level Calibration or Verification	3-9 or 4-10 and 5-10
	ALC Slope Cal (option 6 only)	5-12
Delete Front Panel (Option 17)	N/A	
mmW Bias Output (Option 18)	N/A	
Scan Modulation (Option 20)	RF Level Calibration or Verification	3-9 or 4-10 and 5-10
SDM or SQM	Switched Filter Shaper Calibration	5-9
	RF Level Calibration or Verification	3-9 or 4-10 and 5-10
	Phase Noise Verification	3-8 or 4-9
	Spurious Signals Verification	3-7 or 4-8

Table 7-2. Calibration/Verification Rework Guide (3 of 3)

Assembly	Calibration/Verification Procedure	Section Number
Front Panel	Spurious Signals Verification	3-7 or 4-8
Regulator Power Supply	Phase Noise Verification	3-8 or 4-9

7-3 Chassis Covers

Troubleshooting procedures require removal of the top and bottom covers. Replacement of some MG369xC assemblies and parts require removal of all covers. The following procedure describes this process.

Tool Required

1 Phillips screwdriver

Preliminary

Disconnect the power cord from the instrument.

Procedure

Remove and replace the chassis covers as follows:

Note	The screws with green heads have metric threads. When it becomes necessary to replace any of these screws, always use the exact replacement green-headed screws to avoid damage to the instrument. Anritsu PN: 905-8 (long); Z-951102 (short).

1. Use a Phillips screwdriver to remove the screws and the front handle assemblies from the instrument (see Figure 7-1). For models not having front handles, remove the screws and the front top and bottom feet from the instrument. Retain the screws.
2. Use a Phillips screwdriver to remove the four feet from the rear of the instrument. Retain the screws.
3. Remove the screw that fastens the top cover to the chassis (see Figure 7-2 on page 7-7).
4. At the rear of the instrument pull the cover upwards about 1.5 inches then pull the cover towards the rear of the instrument while sliding the cover out along the grooves in the chassis.
5. Turn the instrument over so that the bottom cover is on top.
6. Remove the screw that fastens the bottom cover to the chassis. See Figure 7-2. At the rear of the instrument pull the cover upwards about 1.5 inches then pull the cover towards the rear of the instrument while sliding the cover out along the grooves in the chassis.
7. To replace the chassis covers, reverse the procedure used to remove them.

Note	It is necessary to remove the side covers only if the front panel is to be removed in a later step.

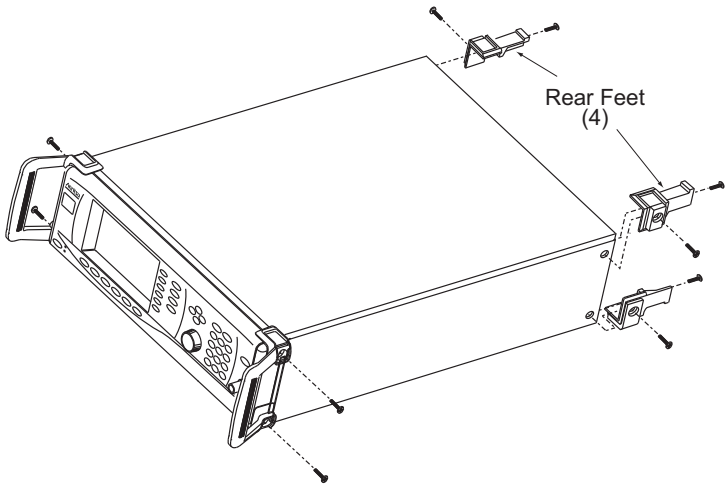

Figure 7-1. Front Handle and Rear Feet Removal

8. If the side covers need to be removed, turn the instrument over to return it to the upright position.
9. Remove the screw that fastens the left side cover to the chassis. See Figure 7-2.
10. Remove the side cover and set it aside.
11. Remove the screw that fastens the right side cover to the chassis. See Figure 7-2.
12. Remove the side cover and set it aside.
13. To replace the chassis covers, reverse the procedure used to remove them.

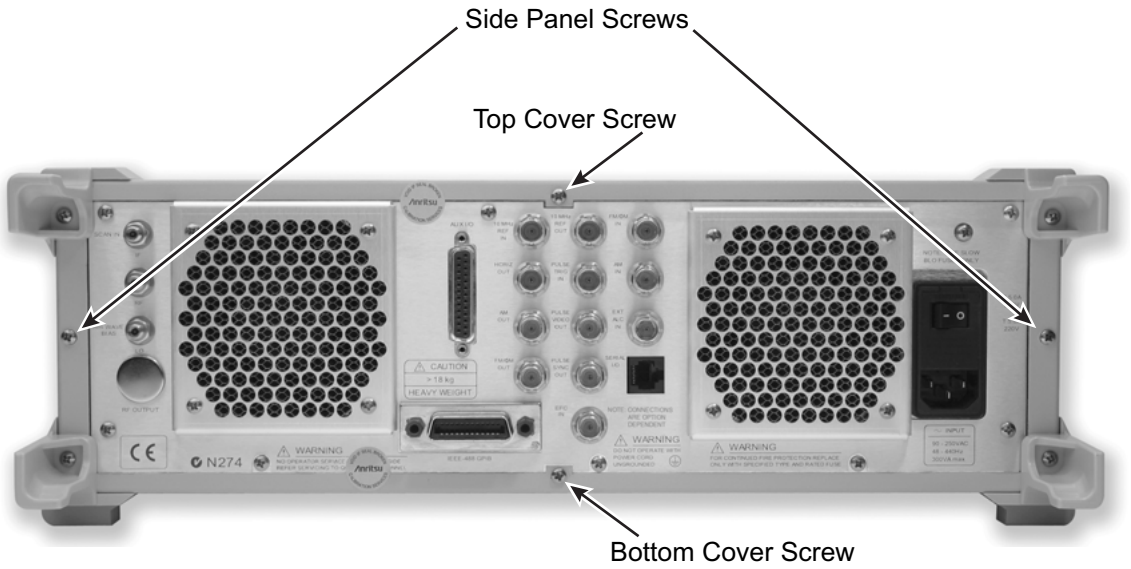

Figure 7-2. Rear Panel Retaining Screw Locations

7-4 Front Panel Assembly

This paragraph provides instructions for removing and replacing the front panel assembly of the MG369xC. The front panel assembly contains the A1 front panel PCB. Refer to Figure 7-3 and Figure 7-4 during this procedure.

Preliminary

Remove the front handles, rear feet, and chassis covers as described in Section 7-3.

Procedure

1. With the front handles and chassis covers removed, place the MG369xC on a flat surface, with the top side up.
2. Carefully pull the front panel away from the chassis to gain access to the front panel ribbon cable that connects the front panel PCB assembly to the microprocessor PCB assembly. See Figure 7-4.
3. Disconnect the front panel ribbon cable from the connector on the front panel PCB assembly. See Figure 7-3.
4. Carefully pull the front panel assembly forward until it is clear of the RF OUTPUT connector. Set front panel aside.
5. To replace the front panel assembly, reverse the removal process.

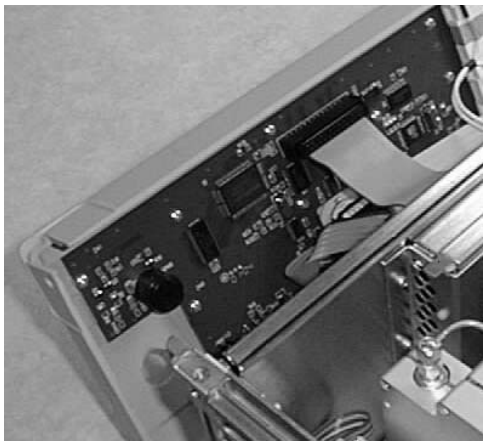

Figure 7-3. Front Panel Ribbon Connector Detail

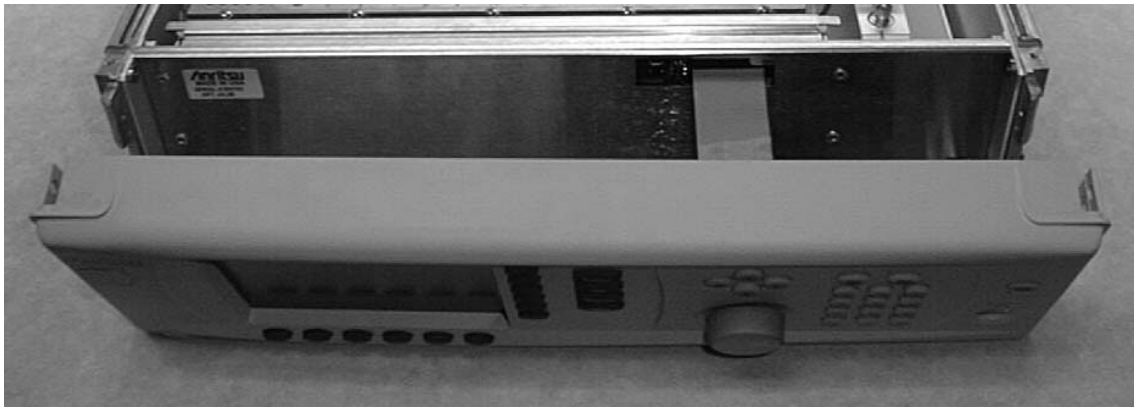

Figure 7-4. Front Panel Removal

7-5 A2 Microprocessor PCB Board

This paragraph provides instructions for removing and replacing the A2 microprocessor PCB which is located immediately behind the front panel in a shielded card cage. See Figure 7-5.

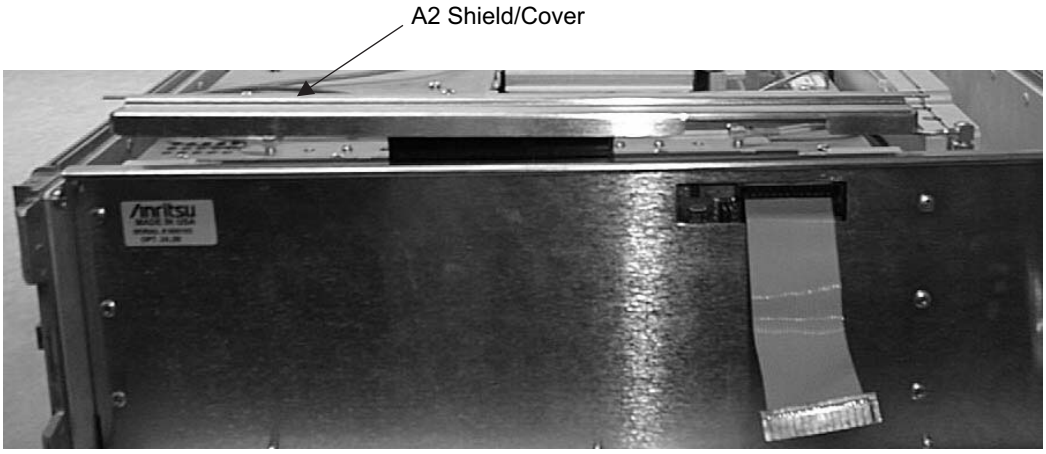

Figure 7-5. A2 Microprocessor PCB Removal

Preliminary

If possible, save the calibration information using Anritsu's calibration data save/restore software (P/N 2300-478). The process is:

1. Install the software.
2. Connect the MG369xC to the GPIB bus and power on the MG369xC.
3. Start the program.
4. Click on Save to Disk.
5. Pick an appropriate location and save the file. It should only take a few moments.

Remove the front panel assembly as described in Section 7-4.

Procedure

Remove and replace the A2 microprocessor PCB as follows:

1. Grasp the lifting tabs on the sides of the microprocessor shield/cover and remove. (Some models may have retention screws that need to be removed from the lift tabs.)
2. Carefully disconnect the ribbon cable from the connector J2 of the microprocessor board. Note the orientation of the red stripe.
3. Using the card extractor handles, lift and remove the microprocessor board from the card cage.
4. To replace the microprocessor board, reverse the removal process.

Note	When reconnecting the ribbon cable, the edge with the red stripe should be located to the right as seen from the front of the instrument.

7-6 A3 Reference/Fine Loop PCB

This paragraph provides instructions for removing and replacing the A3 reference/fine loop PCB, which is located in a shielded enclosure immediately behind the microprocessor board card cage.

Preliminary

Remove the front handles, rear feet, and top cover as described in Section 7-3.

Procedure

Remove and replace the reference/fine loop PCB as follows:

1. Carefully disconnect the coaxial cables from the top connectors of the A3 PCB assembly. See Figure 7-6 and Figure 7-7.
2. Use a Phillips screwdriver to remove the nine retaining screws from the A3 shield cover. Retain the screws.
3. Remove cover and set aside.
4. Using the card extractor handles, lift and remove the A3 PCB from its enclosure.
5. To replace the A3 PCB, reverse the removal process.

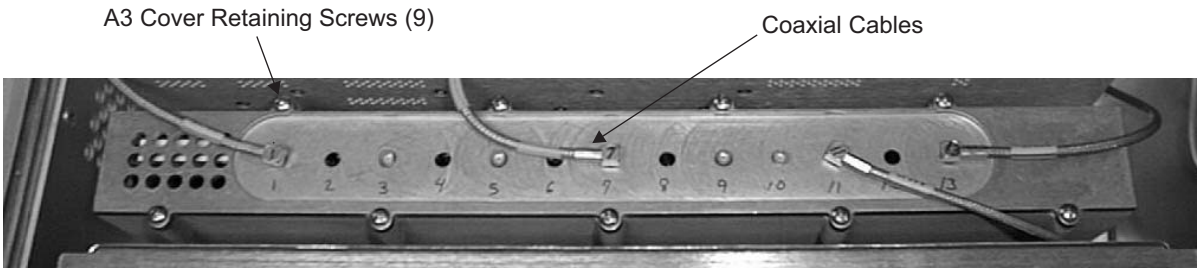

Figure 7-6. A3 Reference/Fine Loop PCB Cover Removal

7-7 A4 Coarse Loop PCB

This section provides instructions for removing and replacing the A4 coarse loop PCB assembly, which is located immediately behind the A3 reference/fine loop PCB assembly.

Preliminary

Remove the front handles, rear feet, and top cover as described in Section 7-3. For models with Option 3 or 3x, the A4 PCB and shield assembly are removed as a single unit and the bottom cover to the instrument must also be removed.

Procedure

Remove and replace the A4 PCB assembly as follows: (models without Option 3 or 3x).

1. Carefully disconnect the coaxial cables from the top connectors of the A4 PCB assembly. Refer to Figure 7-7.
2. Use a Phillips screwdriver to remove the nine retaining screws from the A4 shield cover assembly. Retain the screws.
3. Remove the cover and set it aside.
4. Using the card extractor handles, lift and remove the A4 PCB from its enclosure.
5. To replace the A4 PCB assembly, reverse the removal process.

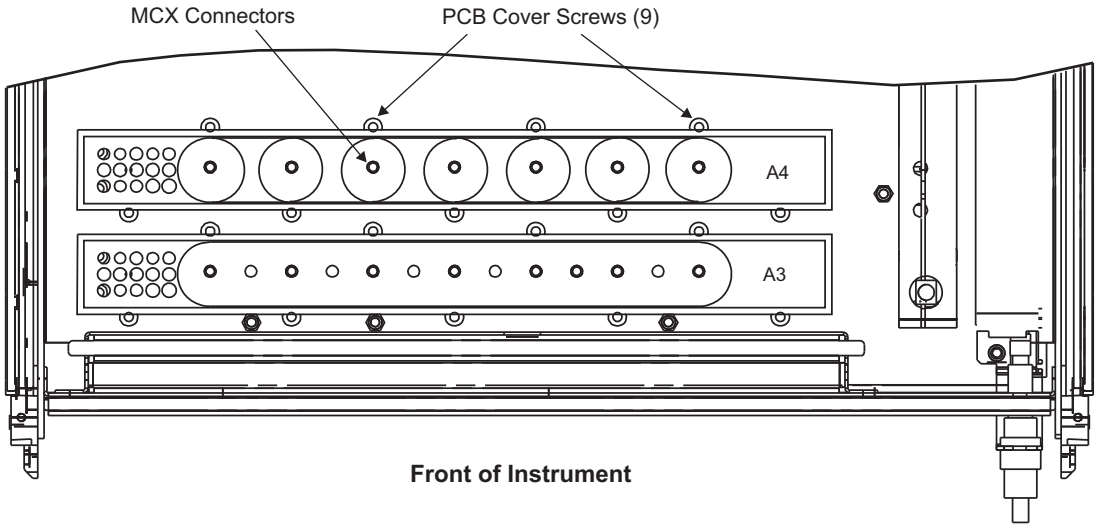

Figure 7-7. A3 Reference/Fine Loop and A4 Coarse Loop PCB Assembly Removal

Remove and replace the A4 PCB assembly as follows: (models with Option 3 or 3x).

1. Carefully disconnect the coaxial cables from the top connectors of the A4 PCB assembly.
2. Turn the chassis upside down and locate the four retaining screws for the A4 board assembly. Refer to Figure 7-8.
3. Use a Phillips screwdriver to remove the retaining screws. Retain the screws.
4. Turn the chassis right side up. Disconnect the A4 PCB assembly by lifting it from the chassis connector and set it aside.
5. To replace the A4 PCB assembly, reverse the removal process.

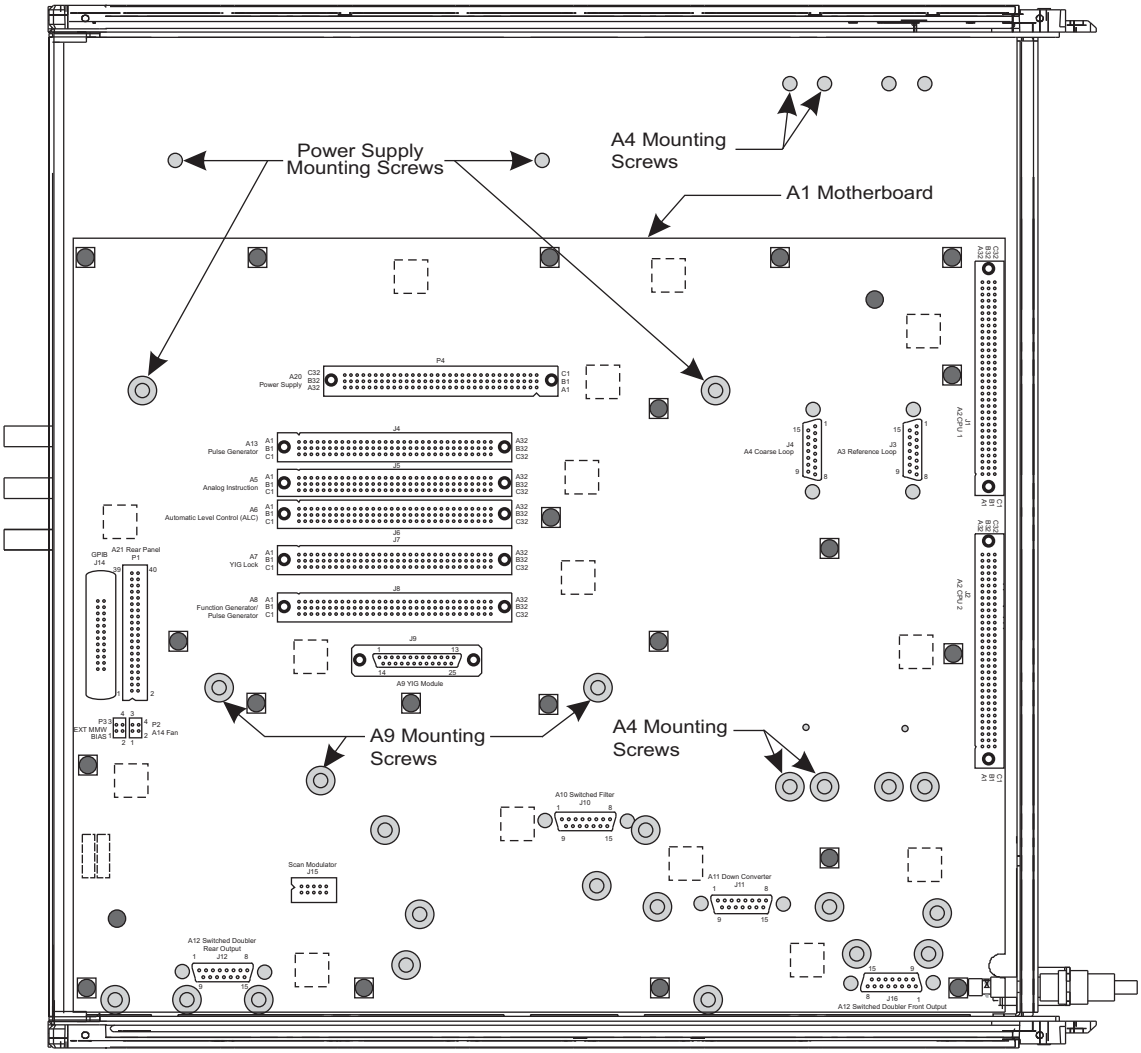

Figure 7-8. Location of Retaining Screws for A4 PCB Assembly and A9 YIG Assembly

7-8 A5 to A9 PCB Removal

For access to the A5, A6, A7, A8, and A9 assemblies the card cage cover must be removed first, as follows:

Preliminary

Remove the front handles, rear feet, and top cover as described in Section 7-3.

Card Cage Cover Removal

Remove the card cage cover as follows:

1. Use a Phillips screwdriver to remove the two screws that secure the card cage cover (Figure 7-9).

   Retain the screws.

2. Pull the cover up and to the right, as seen from the front, to remove.

   Set the cover aside.

Note	To avoid damage during reassembly, see "Card Cage Cover Installation" on page 7-15. There are critical steps when reinstalling the cover to insure against PCB or cable damage.

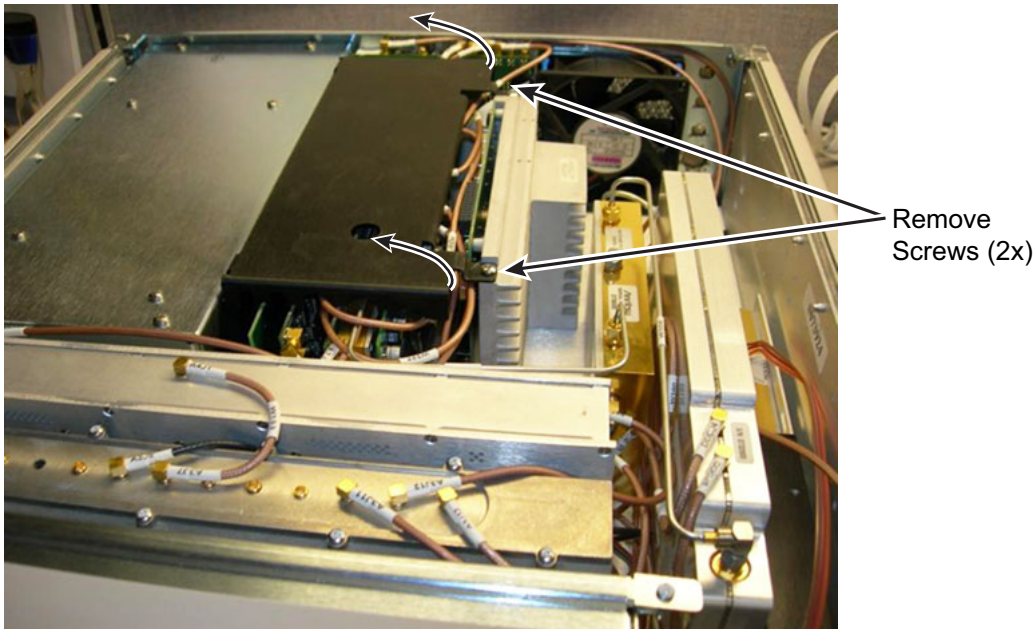

Figure 7-9. Card Cage Cover Removal

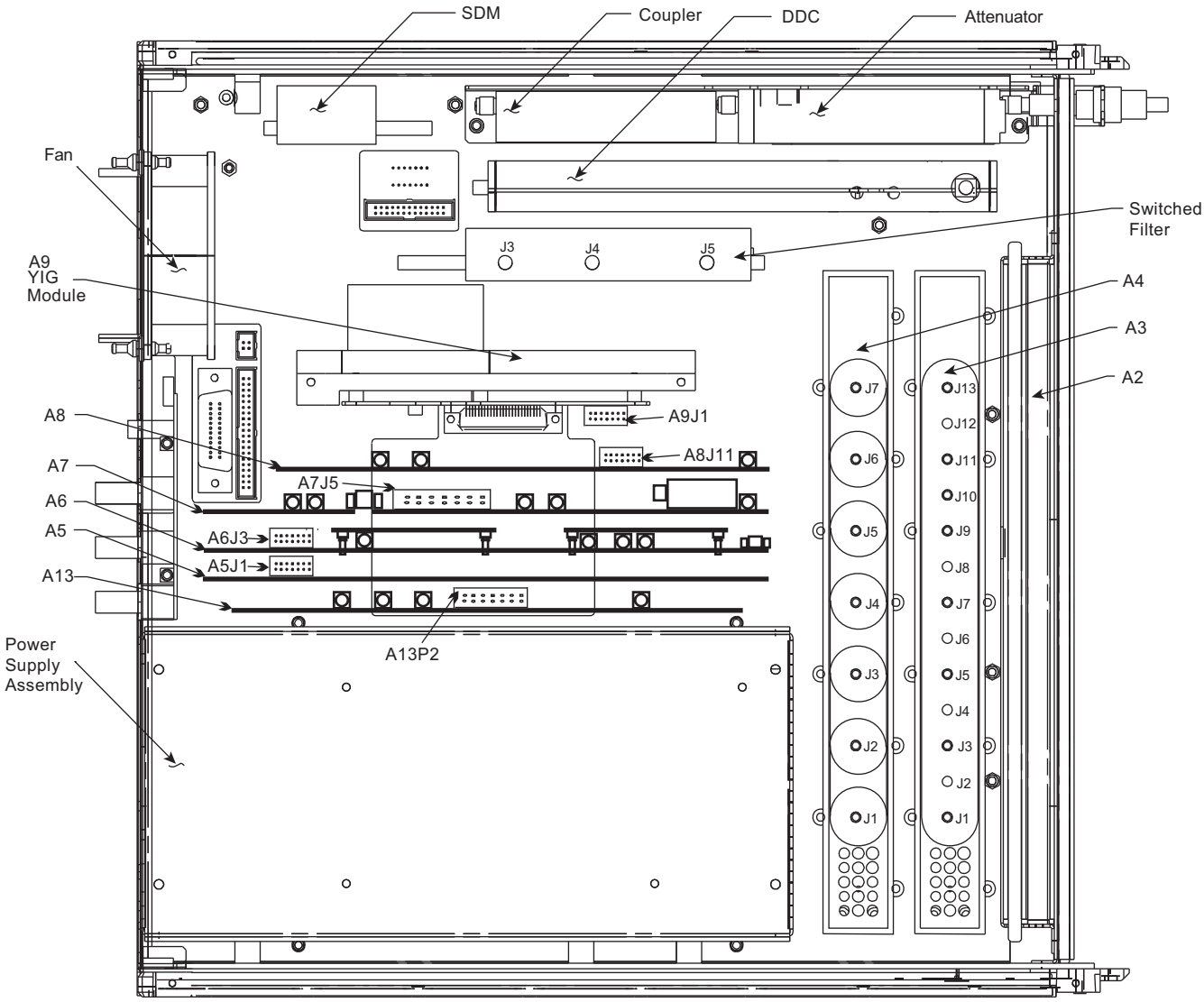

Figure 7-10. Locations of A5, A6, A7, and A9 PCB Assemblies

A5 Auxiliary PCB

To remove the A5 auxiliary PCB, proceed as follows:

1. Grasp the A5 PCB by the edges and pull up to remove the board from the chassis connector. See Figure 7-10 for locations of the A5, A6, A7, A8, and A9 PCBs.
2. To install the A5 PCB, reverse the removal process.

A6 ALC PCB

To remove the A6 ALC PCB, proceed as follows:

1. Disconnect the coaxial cables from the top edge of the A6 PCB.
2. Grasp the A6 PCB by the edges and pull up to remove the board from the chassis connector.
3. To install the A6 ALC PCB, reverse the removal process.

A7 YIG Lock PCB

To remove the A7 YIG lock PCB, proceed as follows:

1. Disconnect the miniature coax cable connectors from the top edge of the A7 PCB.
2. Disconnect the hard coax cable line from the A7 board sampler at the coax connector on the switched filter assembly.
3. Grasp the A7 PCB by the edges and gently pull up to remove the board from the chassis connector.
4. To install the A7 YIG lock PCB, reverse the removal process.

A9 YIG Assembly

To remove the A9 YIG assembly, proceed as follows:

1. Disconnect the hard coax cable line that connects the A9 module to the switched filter assembly at the coax connector on the switched filter assembly.
2. Turn the chassis upside down and locate the three retaining screws for the A9 YIG assembly. Refer to Figure 7-8 on page 7-12.
3. Use a Phillips screwdriver to remove the three retaining screws. Retain screws.
4. Turn the chassis right side up. Disconnect the A9 assembly from the chassis connector and set aside.
5. To install the A9 YIG assembly, reverse the removal process.

Card Cage Cover Installation

Install the card cage cover as follows:

1. Put the A5, A6, A7, A8 and A9 PCB card cage cover into place by inserting the tabs on the left cover edge into the slots provided on the power supply cover.
2. As the cover is lowered, ensure that all PC board top edges are aligned with the notches in the fingers at both ends of the cover, and that the cover is not pinching any cables. SeeFigure 7-11.

Note	On the cover, the smaller notches in the fingers are for PCB edge alignment and the larger slots are for the cables to pass through.

Note	The PC boards top edges may have to be moved slightly to align them properly with the notches in the cover. Figure 7-11 shows the cover fingers holding the PCB assemblies in place.

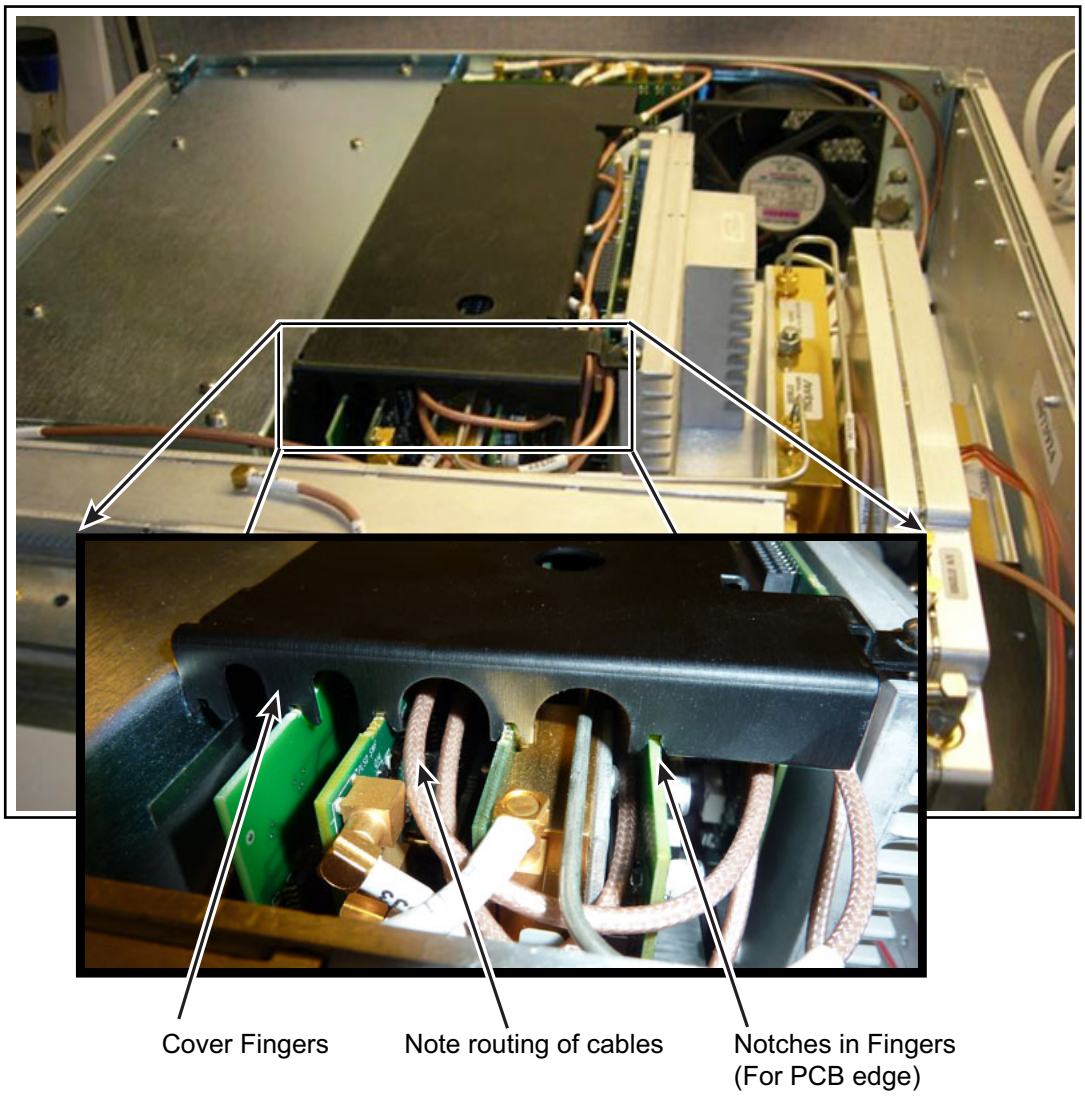

Figure 7-11. Ensuring Cover Alignment

Note	Once installed, the PCB cover should be resting flat on the mounting points without the screws installed. If it is raised in the air, one of the PCBs may not in the correct slot or a cable may be in the way. If this occurs, raise cover and recheck the routing of cables and positioning of the PCBs. See Figure 7-12 on page 7-17 for a general idea of how the cables should be routed. Depending on the options of your unit, the wiring might not exactly match that shown in the figure.

3. After ensuring the cover is properly installed, insert and tightened the two PCB cover screws (Figure 7-9 on page 7-13).

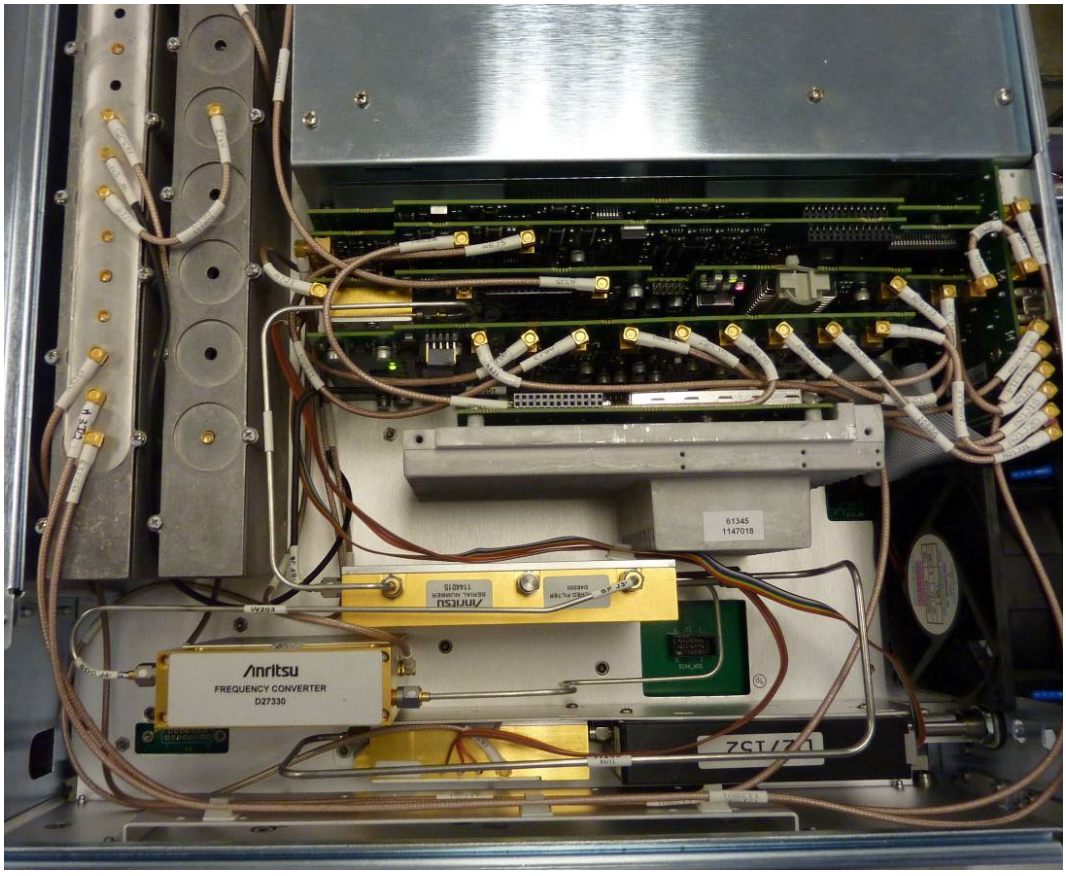

Figure 7-12. Cable Routing Example

7-9 Power Supply Assembly

This section provides instructions for removing and replacing the power supply assembly, which is located in a shielded enclosure at the left rear of the instrument.

Preliminary

It is necessary to first remove the card cage cover and instrument side cover, as described in Section 7-8.

Power Supply Top Assembly

To remove and replace the power supply top cover/ top assembly, proceed as follows:

1. At the rear of the instrument, remove the four screws from the fan filter guard located immediately behind the power supply assembly (Figure 1-1 on page 1-4). Remove the fan filter guard (and honeycomb) and set it aside. Retain the screws.
2. Locate the six screws that secure the rear panel to the chassis and power supply (see Figure 7-13). Use a Phillips screw driver to remove the screws (retain the screws). The last screw is found on the side panel.
3. Gently pull the rear panel away from the chassis to gain access to the top rear power supply cover screws.
4. Use a Phillips screw driver to remove the four screws that secure the top subassembly (cover and PDU power supply unit) of the power supply assembly. Refer to Figure 7-14 on the following page.

5. Carefully lift the top subassembly off the power supply assembly. Hold the top subassembly securely. Disconnect the power input cable at connector J1 located to the rear of the PDU power supply unit. See Figure 7-14.
6. Similarly, disconnect the cable from the top subassembly at connector P1 of the power supply regulator PCB (lower subassembly). Also disconnect the 2-wire PS Inhibit cable at the JP3 connector of the regulator PCB. Put the PDU power supply unit aside for later replacement.

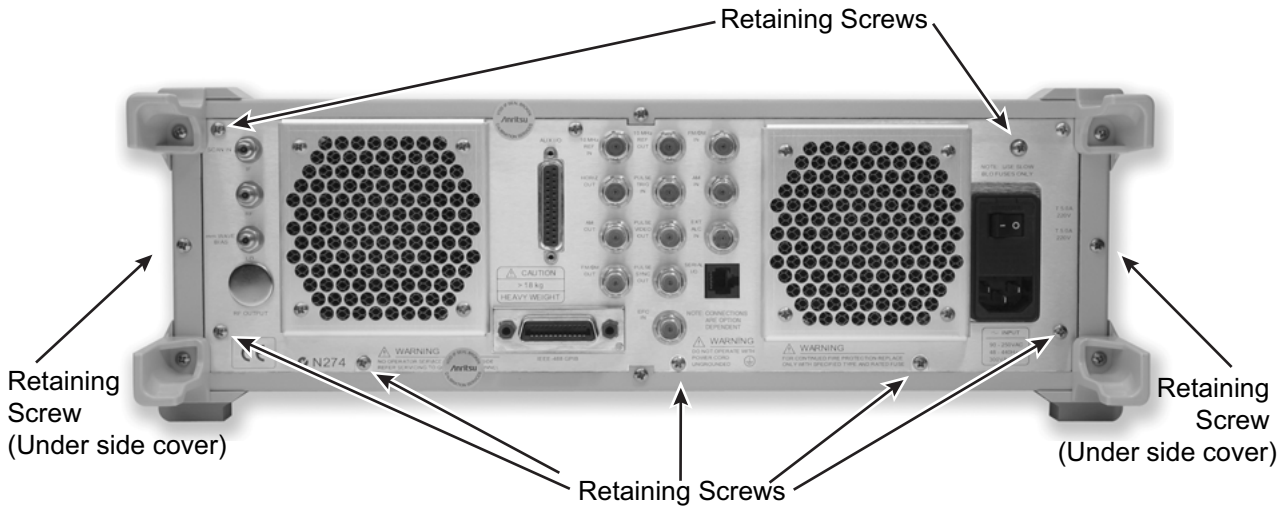

Figure 7-13. Rear Panel Retaining Screw Locations

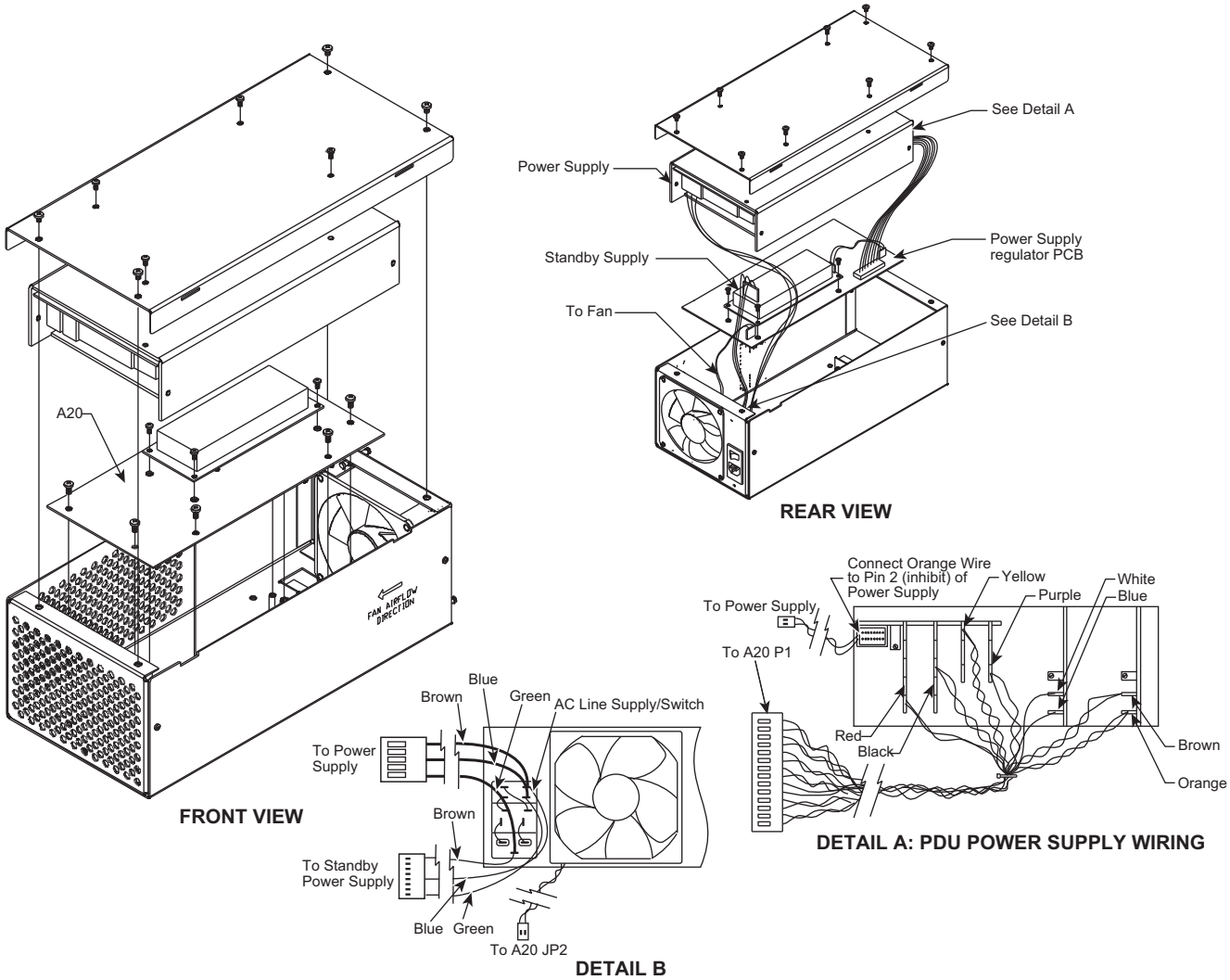

Figure 7-14. Power Supply Assembly

12 Volt Standby Power Supply PCB

To remove and replace the 12 volt standby power supply PCB from the power regulator PCB, proceed as follows:

1. If not done previously, remove the upper power supply top assembly (previous procedure).
2. Disconnect the 2-wire connector from connector JP1 of the power regulator PCB at connector CN2 of the 12 volt power supply PCB.
3. Use a Phillips screwdriver to remove the four screws that fasten the 12 volt power supply PCB to the chassis through the power regulator PCB. Retain the screws.
4. Remove the 12 volt standby power supply PCB by lifting it off of the mounting posts.
5. To install the power supply assembly, reverse the removal process.

A20 Power Supply Regulator

To remove and replace the lower power supply subassembly from the bottom of the power supply enclosure, proceed as follows:

1. If not done previously, remove the upper power supply top assembly and 12 volt standby power supply PCB (previous procedures).
2. Disconnect the 2-wire cable from the fan assembly at the JP2 connector of the power regulator PCB.
3. Use a Phillips screwdriver to remove the seven screws that fasten the regulator PCB to the power supply assembly. Retain screws. Remove the lower power supply subassembly from the power supply enclosure.
4. To install the power supply regulator, reverse the removal process.

Appendix A — Test Records (N5531S Test Equipment)

A-1 Introduction

This appendix provides test records for recording the results of the performance verification tests (Chapter 3) and the calibration procedures (Chapter 5). They jointly provide the means for maintaining an accurate and complete record of instrument performance. The test records in this appendix are provided for all models of the series MG369xC Synthesized Signal Generators with the exception of the MG3697C. The test records for that model is located in Appendix B.

Some test records have been customized to cover particular MG369xC models. These test records contain specific references to frequency parameters and power levels that apply only to that instrument model and its available options. When a test record is customized, it is labeled with the specific model and option list for the particular instrument it covers. Test records which are not customized do not specify a specific model or option list. These test records are generic and may contain specific references to frequency parameters and power levels that exceed the operational limits of the instrument being tested. When using generic test records, only use the parameters that meet the operational limits of the instrument being tested.

A-2 Uncertainty Specifications

The uncertainty specifications provided in these test records apply only when the manufacturer and model of test equipment (Table 3-1), test setups, calibration and performance verification procedures, and other test guidelines found in this manual are used. For a description of measurement uncertainty, refer to Section 3-5.

A-3 Adapter, Attenuator and Cable Insertion Loss

In order to achieve the most accurate measurements, the insertion loss of adapters, attenuators and cables must be added to each measurement for the test records that require it. The process is to add up the insertion loss of the adapters, attenuators and cables and enter the results in the column labeled “Offset Value”. Then add this value to the “Measured Value” and enter the result in the “Final Value”. In some cases, the total insertion loss must be converted from dB into linear %. See the conversion formula below.

$$\% = 10^{(\mathrm{dB}/10)} - 1$$

Where dB = the value to be converted to percentage

A-4 Test Record History

We recommend that you make a copy of the test record pages each time a test procedure is performed. By dating each test record copy, a detailed history of the instrument’s performance can be accumulated.

MG369xC	Firmware Revision:	Operator:
Serial Number:	Date:	Options:

Section 3-6 Internal Time Base Aging Rate Test (Optional)

All MG369xC Models

	Date and Time	Measured Value	Upper Limit	Measurement Uncertainty
Frequency Error Value			N/A	N/A
Frequency Error Value (after 24 hours)			N/A	N/A
Computed Aging Rate	N/A	_____ per day	$2x10^{-9}$ per day ($5x10^{-10}$ per day with Option 16)	$2x10^{-12}$ per day

MG369xC	Firmware Revision:	Operator:
Serial Number:	Date:	Options:

Section 3-7 Harmonic Testing (No Opt. 15)

All MG369xC Models without Option 15 (1 of 3)

Power level: The power level changes based on frequency, model and options installed. Set L1 to the lesser of +10 dBm or to the maximum specified power level. Refer to Appendix B the Technical Data Sheet, for the maximum specified power levels.

Test Frequency (GHz)	Spectrum Analyzer's Span (MHz)	Spectrum Analyzer's BW/RBW/VBW (kHz)	2nd Harmonic Frequency (GHz)	Measured Value (dBc)	Offset Value (dB) (See Section A-3)	Final Value (dBc)	3rd Harmonic Frequency (GHz)	Measured Value (dBc)	Offset Value (dB) (See Section A-3)	Final Value (dBc)	1/2 Sub Harmonic (GHz)	Measured Value (dBc)	Offset Value (dB) (See Section A-3)	Final Value (dBc)	1/4 Sub Harmonic (GHz)	Measured Value (dBc)	Offset Value (dB) (See Section A-3)	Final Value (dBc)	3/4 Sub Harmonic (GHz)	Measured Value (dBc)	Offset Value (dB) (See Section A-3)	Final Value (dBc)	Harmonic Related Upper Limit (dBc)	Measurement Uncertainty (dB)
Frequencies: 0.1 Hz to 10 MHz (Models with Option 22 Only)																								
0.0001	0.010	1	0.002				0.0003				N/A				N/A				N/A				–30	0.41
0.00075	0.010	1	0.0015				0.00225				N/A				N/A				N/A				–30	0.41
0.001	0.010	1	0.002				0.0030				N/A				N/A				N/A				–30	0.41
0.009999	0.010	1	.019998				.029997				N/A				N/A				N/A				–30	0.41
Frequencies: 10 MHz to ≤ 100 MHz (Models with Option 4 Only)																								
0.010	1	10	0.020				0.030				N/A				N/A				N/A				–40	0.41
0.015	1	10	0.030				0.045				N/A				N/A				N/A				–40	0.41
0.060	1	10	0.120				0.180				N/A				N/A				N/A				–40	0.41
0.100	1	10	0.200				0.300				N/A				N/A				N/A				–40	0.41
Frequencies: > 100 MHz to ≤ 2.2 GHz (Models with Option 4 Only)																								
100.1	1	10	0.2002				0.3003				N/A				N/A				N/A				–50	0.41
500	1	10	1.000				1.500				N/A				N/A				N/A				–50	0.41
1500	1	10	3.000				4.500				N/A				N/A				N/A				–50	0.93
2000	1	10	4.000				6.000				N/A				N/A				N/A				–50	0.93
2200	1	10	4.400				6.600				N/A				N/A				N/A				–50	0.93

MG369xC	Firmware Revision:	Operator:
Serial Number:	Date:	Options:

Section 3-7 Harmonic Testing (No Opt. 15)

All MG369xC Models without Option 15 (2 of 3)

Power level: The power level changes based on frequency, model and options installed. Set L1 to the lesser of +10 dBm or to the maximum specified power level. Refer to Appendix B the Technical Data Sheet, for the maximum specified power levels.

Test Frequency (GHz)	Spectrum Analyzer's Span (MHz)	Spectrum Analyzer's BW/RBW/VBW (kHz)	2nd Harmonic Frequency (GHz)	Measured Value (dBc)	Offset Value (dB) (See Section A-3)	Final Value (dBc)	3rd Harmonic Frequency (GHz)	Measured Value (dBc)	Offset Value (dB) (See Section A-3)	Final Value (dBc)	1/2 Sub Harmonic (GHz)	Measured Value (dBc)	Offset Value (dB) (See Section A-3)	Final Value (dBc)	1/4 Sub Harmonic (GHz)	Measured Value (dBc)	Offset Value (dB) (See Section A-3)	Final Value (dBc)	3/4 Sub Harmonic (GHz)	Measured Value (dBc)	Offset Value (dB) (See Section A-3)	Final Value (dBc)	Harmonic Related Upper Limit (dBc)	Measurement Uncertainty (dB)
Frequencies: 10 MHz to ≤ 50 MHz (Models with Option 5 Only)																								
0.10	1	10	0.020				0.030				N/A				N/A				N/A				–30	0.41
0.015	1	10	0.030				0.045				N/A				N/A				N/A				–30	0.41
0.030	1	10	0.060				0.090				N/A				N/A				N/A				–30	0.41
0.045	1	10	0.090				0.135				N/A				N/A				N/A				–30	0.41
0.050	1	10	0.100				0.150				N/A				N/A				N/A				–30	0.41
Frequencies: > 50 MHz to < 2 GHz (Models with Option 5 Only)																								
0.0501	1	10	0.1002				0.1503				N/A				N/A				N/A				–40	0.41
0.600	1	10	1.200				1.800				N/A				N/A				N/A				–40	0.41
1.500	1	10	3.000				4.500				N/A				N/A				N/A				–40	0.93
1.990	1	10	3.980				5.970				N/A				N/A				N/A				–40	0.93
Frequencies: 2 GHz (>2.2 GHz for Models with Option 4) **to ≤ 20 GHz**																								
2.0[(a)(b)]	1	10	4				6				N/A				N/A				N/A				–60	0.93
2.201[(b)]	1	10	4.402				6.603				N/A				N/A				N/A				–60	1.13
9.99[(b)]	1	10	19.98				29.97				N/A				N/A				N/A				–60	1.49
10.01[(b)]	1	10	20.02				30.03				N/A				N/A				N/A				–60	1.49
20.0[(b)]	1	10	40				N/A				N/A				N/A				N/A				–60	1.61

MG369xC	Firmware Revision:	Operator:
Serial Number:	Date:	Options:

Section 3-7 Harmonic Testing (No Opt. 15)

All MG369xC Models without Option 15 (3 of 3)

Power level: The power level changes based on frequency, model and options installed. Set L1 to the lesser of +10 dBm or to the maximum specified power level. Refer to Appendix B the Technical Data Sheet, for the maximum specified power levels.

Test Frequency (GHz)	Spectrum Analyzer's Span (MHz)	Spectrum Analyzer's BW/RBW/VBW (kHz)	2nd Harmonic Frequency (GHz)	Measured Value (dBc)	Offset Value (dB) (See Section A-3)	Final Value (dBc)	3rd Harmonic Frequency (GHz)	Measured Value (dBc)	Offset Value (dB) (See Section A-3)	Final Value (dBc)	1/2 Sub Harmonic (GHz)	Measured Value (dBc)	Offset Value (dB) (See Section A-3)	Final Value (dBc)	1/4 Sub Harmonic (GHz)	Measured Value (dBc)	Offset Value (dB) (See Section A-3)	Final Value (dBc)	3/4 Sub Harmonic (GHz)	Measured Value (dBc)	Offset Value (dB) (See Section A-3)	Final Value (dBc)	Harmonic Related Upper Limit (dBc)	Measurement Uncertainty (dB)
Frequencies: > 20 GHz to ≤ 50 GHz (MG3693C, MG3694C, and MG3695C Only)																								
20.01[b]	1	10	40.02				N/A				10.005				5.0025				15.0075				–40	1.61
25.0[b]	1	10	50				N/A				12.5				6.25				18.75				–40	1.73
30.0[b]	1	10	N/A				N/A				15				7.5				22.5				–40	1.43
40.0[b]	1	10	N/A				N/A				20				10				30				–40	1.62
50.0[b]	1	10	N/A				N/A				25				12.5				37.5				–40	1.73

a. Not performed on units with Option 4.

b. Power level may change as the test frequency is increased.

MG369xC	Firmware Revision:	Operator:
Serial Number:	Date:	Options:

Section 3-7 Harmonic Testing (+Opt. 15)

All MG369xC Models with Option 15 (1 of 2)

Power level: The power level changes based on frequency, model and options installed. Set L1 to the lesser of +10 dBm or to the maximum specified power level. Refer to Appendix B the Technical Data Sheet, for the maximum specified power levels.

Test Frequency (GHz)	Spectrum Analyzer's Span (MHz)	Spectrum Analyzer's BW/RBW/VBW (kHz)	2nd Harmonic Frequency (GHz)	Measured Value (dBc)	Offset Value (dB) (See Section A-3)	Final Value (dBc)	3rd Harmonic Frequency (GHz)	Measured Value (dBc)	Offset Value (dB) (See Section A-3)	Final Value (dBc)	1/2 Sub Harmonic (GHz)	Measured Value (dBc)	Offset Value (dB) (See Section A-3)	Final Value (dBc)	1/4 Sub Harmonic (GHz)	Measured Value (dBc)	Offset Value (dB) (See Section A-3)	Final Value (dBc)	3/4 Sub Harmonic (GHz)	Measured Value (dBc)	Offset Value (dB) (See Section A-3)	Final Value (dBc)	Harmonic Related Upper Limit (dBc)	Measurement Uncertainty (dB)
Frequencies: 0.1 Hz to 10 MHz (Models with Option 22 Only)																								
0.0001	10	1	0.0002				0.0003				N/A				N/A				N/A				–30	0.41
0.00075	10	1	0.0015				0.00225				N/A				N/A				N/A				–30	0.41
0.001	10	1	0.002				0.003				N/A				N/A				N/A				–30	0.41
0.009999	10	1	0.019998				0.029997				N/A				N/A				N/A				–30	0.41
Frequencies: 10 MHz to ≤ 100 MHz (Models with Option 4 Only)																								
0.010	1	10	0.020				0.030				N/A				N/A				N/A				–40	0.41
0.015	1	10	0.030				0.045				N/A				N/A				N/A				–40	0.41
0.060	1	10	0.120				0.180				N/A				N/A				N/A				–40	0.41
0.100	1	10	0.200				0.300				N/A				N/A				N/A				–40	0.41
Frequencies: > 100 MHz to ≤ 2.2 GHz (Models with Option 4 Only)																								
0.1001	1	10	0.2002				0.3003				N/A				N/A				N/A				–50	0.41
0.500	1	10	1.000				1.500				N/A				N/A				N/A				–50	0.41
1.500	1	10	3.000				4.500				N/A				N/A				N/A				–50	0.41
2.000	1	10	4.000				6.000				N/A				N/A				N/A				–50	0.93
2.200	1	10	4.400				6.600				N/A				N/A				N/A				–50	0.93

MG369xC	Firmware Revision:	Operator:
Serial Number:	Date:	Options:

Section 3-7 Harmonic Testing (+Opt. 15)

All MG369xC Models with Option 15 (2 of 2)

Power level: The power level changes based on frequency, model and options installed. Set L1 to the lesser of +10 dBm or to the maximum specified power level. Refer to Appendix B the Technical Data Sheet, for the maximum specified power levels.

Test Frequency (GHz)	Spectrum Analyzer's Span (MHz)	Spectrum Analyzer's BW/RBW/VBW (kHz)	2nd Harmonic Frequency (GHz)	Measured Value (dBc)	Offset Value (dB) (See Section A-3)	Final Value (dBc)	3rd Harmonic Frequency (GHz)	Measured Value (dBc)	Offset Value (dB) (See Section A-3)	Final Value (dBc)	1/2 Sub Harmonic (GHz)	Measured Value (dBc)	Offset Value (dB) (See Section A-3)	Final Value (dBc)	1/4 Sub Harmonic (GHz)	Measured Value (dBc)	Offset Value (dB) (See Section A-3)	Final Value (dBc)	3/4 Sub Harmonic (GHz)	Measured Value (dBc)	Offset Value (dB) (See Section A-3)	Final Value (dBc)	Harmonic Related Upper Limit (dBc)	Measurement Uncertainty (dB)
Frequencies: 10 MHz to ≤ 50 MHz (Models with Option 5 Only)																								
0.010	1	10	0.020				0.030				N/A				N/A				N/A				–30	0.41
0.015	1	10	0.030				0.045				N/A				N/A				N/A				–30	0.41
0.030	1	10	0.060				0.090				N/A				N/A				N/A				–30	0.41
0.045	1	10	0.090				0.135				N/A				N/A				N/A				–30	0.41
0.050	1	10	0.100				0.150				N/A				N/A				N/A				–30	0.41
Frequencies: > 50 MHz to < 2 GHz (Models with Option 5 Only)																								
0.0501	1	10	0.1002				0.1503				N/A				N/A				N/A				–40	0.41
0.600	1	10	1.200				1.800				N/A				N/A				N/A				–40	0.41
1.500	1	10	3.000				4.500				N/A				N/A				N/A				–40	0.93
1.990	1	10	3.980				5.970				N/A				N/A				N/A				–40	0.93
Frequencies: > 40 GHz to ≤ 70 GHz (MG3697C Only)																								
50.0[a]	1	10	N/A				N/A				25				12.5				37.5				–25	1.75

a. Power level may change as the test frequency is increased.

MG369xC	Firmware Revision:	Operator:
Serial Number:	Date:	Options:

Section 3-7 Non-Harmonic Testing (Part 1)

(All MG369xC Models)

Part 1 (1 of 3)

MG369xC Frequency (GHz)	MG369xC Output Power Level[a]	Spectrum Analyzer Start Frequency (GHz)	Spectrum Analyzer Stop Frequency (GHz)	Spectrum Analyzer RBW (kHz)	Test Result (dBc)	Offset Value (dB) (See Section A-3)	Final Value (dBc)	Spec. (dBc)	Measurement Uncertainty (dB)
2.650	10dBm	2.649	2.651	30.000				N/A	N/A
2.650	10dBm	2.645	2.649	30.000				-60	0.89
2.650	10dBm	2.595	2.645	100.000				-60	0.89
2.650	10dBm	2.350	2.595	100.000				-60	0.89
2.650	10dBm	2.651	2.655	30.000				-60	0.89
2.650	10dBm	2.655	2.705	100.000				-60	0.89
2.650	10dBm	2.705	2.950	100.000				-60	1.14
2.650	10dBm	2.000	2.350	100.000				-60	0.89
2.650	10dBm	2.950	5.000	100.000				-60	1.14
2.650	10dBm	5.600	7.650	100.000				-60	1.42
2.650	10dBm	8.250	10.300	100.000				-60	1.42
2.650	10dBm	10.900	12.950	100.000				-60	1.42
2.650	10dBm	13.550	16.775	30.000				-60	1.39
2.650	10dBm	16.775	20.000	30.000				-60	1.39
4.400	10dBm	4.399	4.401	30.000				N/A	N/A
4.400	10dBm	4.395	4.399	30.000				-60	1.33
4.400	10dBm	4.345	4.395	100.000				-60	1.33
4.400	10dBm	4.100	4.345	100.000				-60	1.33
4.400	10dBm	4.401	4.405	30.000				-60	1.33
4.400	10dBm	4.405	4.455	100.000				-60	1.33
4.400	10dBm	4.455	4.700	100.000				-60	1.33
4.400	10dBm	2.500	3.000	100.000				-60	1.14
4.400	10dBm	3.600	4.100	100.000				-60	1.33
4.400	10dBm	4.700	8.500	100.000				-60	1.56
4.400	10dBm	9.100	12.900	100.000				-60	1.56
4.400	10dBm	13.500	17.300	30.000				-60	1.54
4.400	10dBm	17.900	20.000	30.000				-60	1.54

MG369xC	Firmware Revision:	Operator:
Serial Number:	Date:	Options:

Section 3-7 Non-Harmonic Testing (Part 1)

(All MG369xC Models)

Part 1 (2 of 3)

MG369xC Frequency (GHz)	MG369xC Output Power Level[a]	Spectrum Analyzer Start Frequency (GHz)	Spectrum Analyzer Stop Frequency (GHz)	Spectrum Analyzer RBW (kHz)	Test Result (dBc)	Offset Value (dB) (See Section A-3)	Final Value (dBc)	Spec. (dBc)	Measurement Uncertainty (dB)
6.950	10dBm	6.949	6.951	30.000				N/A	N/A
6.950	10dBm	6.945	6.949	30.000				-60	1.75
6.950	10dBm	6.895	6.945	100.000				-60	1.75
6.950	10dBm	6.650	6.895	100.000				-60	1.75
6.950	10dBm	6.951	6.955	30.000				-60	1.75
6.950	10dBm	6.955	7.005	100.000				-60	1.75
6.950	10dBm	7.005	7.250	100.000				-60	1.75
6.950	10dBm	2.000	2.017	100.000				-60	1.42
6.950	10dBm	2.617	3.175	100.000				-60	1.56
6.950	10dBm	3.775	4.913	100.000				-60	1.56
6.950	10dBm	5.513	6.650	100.000				-60	1.75
6.950	10dBm	7.250	10.500	30.000				-60	1.75
6.950	10dBm	10.500	13.600	30.000				-60	1.75
6.950	10dBm	14.200	17.000	30.000				-60	1.73
6.950	10dBm	17.000	20.000	30.000				-60	1.73
10.950	10dBm	10.949	10.951	30.000				N/A	N/A
10.950	10dBm	10.945	10.949	30.000				-60	1.75
10.950	10dBm	10.895	10.945	30.000				-60	1.75
10.950	10dBm	10.650	10.895	30.000				-60	1.75
10.950	10dBm	10.951	10.955	30.000				-60	1.75
10.950	10dBm	10.955	11.005	30.000				-60	1.75
10.950	10dBm	11.005	11.250	30.000				-60	1.75
10.950	10dBm	2.000	3.350	30.000				-60	1.56
10.950	10dBm	3.950	5.175	30.000				-60	1.56
10.950	10dBm	5.775	7.913	30.000				-60	1.56
10.950	10dBm	8.512	10.650	30.000				-60	1.75
10.950	10dBm	11.250	15.500	10.000				-60	1.75
10.950	10dBm	15.500	20.000	10.000				-60	1.73

MG369xC	Firmware Revision:	Operator:
Serial Number:	Date:	Options:

Section 3-7 Non-Harmonic Testing (Part 1)

(All MG369xC Models)

Part 1 (3 of 3)

MG369xC Frequency (GHz)	MG369xC Output Power Level[a]	Spectrum Analyzer Start Frequency (GHz)	Spectrum Analyzer Stop Frequency (GHz)	Spectrum Analyzer RBW (kHz)	Test Result (dBc)	Offset Value (dB) (See Section A-3)	Final Value (dBc)	Spec. (dBc)	Measurement Uncertainty (dB)
16.750	10dBm	16.749	16.751	30.000				N/A	N/A
16.750	10dBm	16.745	16.749	30.000				-60	1.71
16.750	10dBm	16.695	16.745	30.000				-60	1.71
16.750	10dBm	16.450	16.695	30.000				-60	1.71
16.750	10dBm	16.751	16.755	30.000				-60	1.71
16.750	10dBm	16.755	16.805	30.000				-60	1.71
16.750	10dBm	16.805	17.050	30.000				-60	1.71
16.750	10dBm	2.000	5.283	30.000				-60	1.54
16.750	10dBm	5.883	8.075	30.000				-60	1.73
16.750	10dBm	8.675	12.263	30.000				-60	1.73
16.750	10dBm	12.863	16.450	10.000				-60	1.73
16.750	10dBm	17.050	20.000	10.000				-60	1.71

a. All specifications apply at the lesser of +10 dBm output or Maximum specified leveled output power, unless otherwise noted.

MG369xC	Firmware Revision:	Operator:
Serial Number:	Date:	Options:

Section 3-7 Non-Harmonic Testing (Part2)

(All MG369xC Models)

Part 2 (1 of 3)

MG369xC Frequency (GHz)	MG369xC Output Power Level[a]	Spectrum Analyzer Center Freq. (GHz)	Spectrum Analyzer Span (kHz)	Spectrum Analyzer RBW (kHz)	Test Result (dBc)	Offset Value (dB) (See Section A-3)	Final Value (dBc)	Specification (dBc)	Measurement Uncertainty (dB)	Exclusions
1.100000[b]	10 dBm	1.100000	100	1	N/A	N/A	N/A	N/A	N/A	
1.100000[b]	10 dBm	1.500000	100	1				–60 (opt. 4 units) –40 (opt. 5 units)	0.40	
1.100000[b]	10 dBm	0.500000	100	1				–60 (opt. 4 units) –40 (opt. 5 units)	0.40	
1.100000[b]	10 dBm	2.000000	100	1				–60 (opt. 4 units) –40 (opt. 5 units)	0.39	
1.100000[b]	10 dBm	6.500000	100	1				–60 (opt. 4 units) –40 (opt. 5 units)	0.93	
1.100000[b]	10 dBm	7.600000	100	1				–60 (opt. 4 units) –40 (opt. 5 units)	1.12	
20.001000	[b]	20.001000	100	1	N/A	N/A	N/A	N/A	N/A	Test not performed on MG3691C and MG3692C
20.001000	[b]	40.000000	100	1				–60	1.66	Test not performed on MG3691C and MG3692C
24.999000	[b]	24.999000	100	1	N/A	N/A	N/A	N/A	N/A	Test not performed on MG3691C and MG3692C
24.999000	[b]	45.800000	100	1				–60	1.73	Test not performed on MG3691C and MG3692C
24.999000	[b]	49.667000	100	1				–60	1.72	Test not performed on MG3691C and MG3692C
25.001000	[b]	25.001000	100	1	N/A	N/A	N/A	N/A	N/A	Test not performed on MG3691C and MG3692C

MG369xC	Firmware Revision:	Operator:
Serial Number:	Date:	Options:

Section 3-7 Non-Harmonic Testing (Part2)

(All MG369xC Models)

Part 2 (2 of 3)

MG369xC Frequency (GHz)	MG369xC Output Power Level[a]	Spectrum Analyzer Center Freq. (GHz)	Spectrum Analyzer Span (kHz)	Spectrum Analyzer RBW (kHz)	Test Result (dBc)	Offset Value (dB) (See Section A-3)	Final Value (dBc)	Specification (dBc)	Measurement Uncertainty (dB)	Exclusions
25.001000	[b]	49.799800	100	1				–60	1.73	Test not performed on MG3691C and MG3692C
31.886891	[b]	31.886891	100	1	N/A	N/A	N/A	N/A	N/A	Test not performed on MG3691C, MG3692C and MG3693C
31.886891	[b]	26.246891	100	1				–60	1.72	Test not performed on MG3691C, MG3692C and MG3693C
32.892580	[b]	32.892580	100	1	N/A	N/A	N/A	N/A	N/A	Test not performed on MG3691C, MG3692C and MG3693C
32.892580	[b]	28.555738	100	1				–60	1.56	Test not performed on MG3691C, MG3692C and MG3693C
39.999000	[b]	39.999000	100	1	N/A	N/A	N/A	N/A	N/A	Test not performed on MG3691C, MG3692C and MG3693C
39.999000	[b]	36.515522	100	1				–60	1.72	Test not performed on MG3691C, MG3692C and MG3693C
40.001000	[b]	40.001000	100	1	N/A	N/A	N/A	N/A	N/A	Test not performed on MG3691C, MG3692C, MG3693C and MG3694C

MG369xC	Firmware Revision:	Operator:
Serial Number:	Date:	Options:

Section 3-7 Non-Harmonic Testing (Part2)

(All MG369xC Models)

Part 2 (3 of 3)

MG369xC Frequency (GHz)	MG369xC Output Power Level[a]	Spectrum Analyzer Center Freq. (GHz)	Spectrum Analyzer Span (kHz)	Spectrum Analyzer RBW (kHz)	Test Result (dBc)	Offset Value (dB) (See Section A-3)	Final Value (dBc)	Specification (dBc)	Measurement Uncertainty (dB)	Exclusions
40.001000	[b]	39.935300	100	1				–60	1.73	Test not performed on MG3691C, MG3692C, MG3693C and MG3694C
43.634869	[b]	43.634869	100	1	N/A	N/A	N/A	N/A	N/A	
43.634869	[b]	43.723037	100	1				–60	1.73	
49.999000	[b]	49.999000	100	1	N/A	N/A	N/A	N/A	N/A	
49.999000	[b]	44.215923	100	1				–60	1.73	

a. All specifications apply at the lesser of +10 dBm output or Maximum specified leveled output power, unless otherwise noted.
b. Dependent on maximum leveled power by options and model number, see footnote tables on the following page.

MG369xC	Firmware Revision:	Operator:
Serial Number:	Date:	Options:

Section 3-7 Non-Harmonic Testing (Footnote Reference)

(All MG369xC Models)

Reference

Footnote b: Table 1, Option 15 not Installed

Units with Option 15 not installed, frequency range from 20 GHz to maximum frequency of model. For output power with Option 22 derate all specifications by 2 dB.

Model	Output Power (dBm)	Output Power with Step Attenuator (opt 2X) installed (dBm)	Output Power with Electronic Step Attenuator (opt 2E) Installed (dBm)
MG3691C	+10	+10	+10
MG3692C	+10	+10	Not available
MG3693C	+6	+3	Not available
MG3694C	+6	+3	Not available
MG3695C	+3	0	Not available
MG3697C	+3	0 (typical 60–67 GHz)	Not available

Footnote b: Table 2, Option 15 Installed

Units with Option 15 installed, frequency range from 20 GHz to maximum frequency of model. For output power with Option 22 derate all specifications by 2 dB.

Model	Freq Range List if Not < 2 GHz to 20 GHz	Notes	Output Power (dBm)	Output Power with Step Attenuator (opt 2X) Installed (dBm)	Output power with Electronic Step Attenuator (opt 2E) Installed (dBm)
MG3691C	< 2 GHz to 10 GHz		+10	+10	+10
MG3692C	< 2 GHz to 20 GHz		+10	+10	N/A
MG3693C	< 2 GHz to 31.8 GHz		+10	+10	Not available
MG3694C	< 2 GHz to 40 GHz		+10	+10	Not available
MG3695C	> 20 GHz to ≤ 40 GHz	w/ opt. 4 or 5	+10	+10	Not available
MG3695C	> 40 GHz to ≤ 50 GHz	w/ opt. 4 or 5	+10	+8	Not available
MG3695C	> 20 GHz to ≤ 50 GHz	w/o opt. 4 or 5	+10	+10	Not available
MG3697C	> 20 GHz to ≤ 40 GHz	w/ opt. 4 or 5	+10	+10	Not available
MG3697C	> 40 GHz to ≤ 67 GHz	w/ opt. 4 or 5	+6	+6	Not available
MG3697C	> 67 GHz to ≤ 70 GHz	w/ opt. 4 or 5	+3 (typical)	0 (typical)	Not available
MG3697C	> 20 GHz to ≤ 40 GHz	w/o opt. 4 or 5	+10	+10	Not available
MG3697C	> 40 GHz to ≤ 67 GHz	w/o opt. 4 or 5	+9	+6 (typical)	Not available
MG3697C	> 67 GHz to ≤ 70 GHz	w/o opt. 4 or 5	+3 (typical)	0 (typical)	Not available

MG369xC	Firmware Revision:	Operator:
Serial Number:	Date:	Options:

Section 3-8 SSB Phase Noise (S/N 103313 and Lower) (No Opt. 3 or 3x)

(For serial numbers 103313 and lower)

All MG369xC Models without Option 3 or 3x (1 of 4)

Frequency Offset	Measured Value (dBc)	Upper Limit (dBc)	Measurement Uncertainty (dB)
Test Frequency: 15 MHz (Models with Option 4 Only)			
10 Hz		–102	4.0
100 Hz		–128	3.0
1 kHz		–142	2.0
10 kHz		–145	2.0
100 kHz		–145	2.0
1 MHz		–145	2.0
Test Frequency: 60 MHz (Models with Option 4 Only)			
10 Hz		–92	4.0
100 Hz		–122	3.0
1 kHz		–140	2.0
10 kHz		–142	2.0
100 kHz		–143	2.0
1 MHz		–145	2.0
Test Frequency: 499 MHz (Models with Option 4 Only)			
10 Hz		–75	4.0
100 Hz		–102	3.0
1 kHz		–120	2.0
10 kHz		–118	2.0
100 kHz		–118	2.0
1 MHz		–143	2.0

MG369xC	Firmware Revision:	Operator:
Serial Number:	Date:	Options:

Section 3-8 SSB Phase Noise (S/N 103313 and Lower) (No Opt. 3 or 3x)

(For serial numbers 103313 and lower)

All MG369xC Models without Option 3 or 3x (2 of 4)

Frequency Offset	Measured Value (dBc)	Upper Limit (dBc)	Measurement Uncertainty (dB)
Test Frequencies: 600 MHz (Models with Option 5 Only)			
10 Hz		–70	4.0
100 Hz		–94	3.0
1 kHz		–115	2.0
10 kHz		–115	2.0
100 kHz		–116	2.0
1 MHz		–138	2.0
Test Frequencies: 1.99 GHz (Models with Option 5 Only)			
10 Hz		–62	4.0
100 Hz		–85	3.0
1 kHz		–100	2.0
10 kHz		–102	2.0
100 kHz		–102	2.0
1 MHz		–111	2.0
Test Frequency: 2.01 GHz (Models without Option 4 Only)			
10 Hz		–65	4.0
100 Hz		–86	3.0
1 kHz		–113	2.0
10 kHz		–111	2.0
100 kHz		–114	2.0
1 MHz		–133	2.0
Test Frequency: 2.19 GHz (Models with Option 4 Only)			
10 Hz		–65	4.0
100 Hz		–86	3.0
1 kHz		–113	2.0
10 kHz		–111	2.0
100 kHz		–114	2.0
1 MHz		–133	2.0

MG369xC	Firmware Revision:	Operator:
Serial Number:	Date:	Options:

Section 3-8 SSB Phase Noise (S/N 103313 and Lower) (No Opt. 3 or 3x)

(For serial numbers 103313 and lower)

All MG369xC Models without Option 3 or 3x (3 of 4)

Frequency Offset	Measured Value (dBc)	Upper Limit (dBc)	Measurement Uncertainty (dB)
Test Frequency: 6.0 GHz			
10 Hz		–54	4.0
100 Hz		–81	3.0
1 kHz		–102	2.0
10 kHz		–103	2.0
100 kHz		–106	2.0
1 MHz		–128	2.0
Test Frequency: 10.0 GHz (8 GHz for MG3691C)			
10 Hz		–52	4.0
100 Hz		–75	3.0
1 kHz		–98	2.0
10 kHz		–104	2.0
100 kHz		–106	2.0
1 MHz		–126	2.0
Test Frequency: 19.99 GHz (not performed on MG3691C)			
10 Hz		–45	4.0
100 Hz		–69	3.0
1 kHz		–92	2.0
10 kHz		–98	2.0
100 kHz		–98	2.0
1 MHz		–124	2.0
Test Frequency: 20.01 GHz (not performed on MG3691C or MG3692C)			
10 Hz		–38	4.0
100 Hz		–62	3.0
1 kHz		–86	2.0
10 kHz		–92	2.0
100 kHz		–92	2.0
1 MHz		–118	2.0

MG369xC	Firmware Revision:	Operator:
Serial Number:	Date:	Options:

Section 3-8 SSB Phase Noise (S/N 103313 and Lower) (No Opt. 3 or 3x)

(For serial numbers 103313 and lower)

All MG369xC Models without Option 3 or 3x (4 of 4)

Frequency Offset	Measured Value (dBc)	Upper Limit (dBc)	Measurement Uncertainty (dB)
Test Frequency: 25.0 GHz (not performed on MG3691C or MG3692C)			
10 Hz		–38	4.0
100 Hz		–62	3.0
1 kHz		–86	2.0
10 kHz		–92	2.0
100 kHz		–92	2.0
1 MHz		–118	2.0

MG369xC	Firmware Revision:	Operator:
Serial Number:	Date:	Options:

Section 3-8 SSB Phase Noise: Power Line & Fan (S/N 103313 and Lower)

(For serial numbers 103313 and lower)

All MG369xC Models without Option 3 or 3x (1 of 2)

Frequency Offset	Measured Value (dBc)	Upper Limit (dBc)	Measurement Uncertainty (dB)
Test Frequency: 15 MHz (Models with Option 4 Only)			
< 300 Hz		–68	4.0
300 Hz to 1 kHz		–72	3.0
> 1 kHz		–72	2.0
Test Frequency: 60 MHz (Models with Options 4 Only)			
< 300 Hz		–68	4.0
300 Hz to 1 kHz		–72	3.0
> 1 kHz		–72	2.0
Test Frequency: 499 MHz (Models with Option 4 Only)			
< 300 Hz		–68	4.0
300 Hz to 1 kHz		–72	3.0
> 1 kHz		–72	2.0
Test Frequencies: 600 MHz (Models with Option 5 Only)			
< 300 Hz		–50	4.0
300 Hz to 1 kHz		–60	3.0
> 1 kHz		–60	2.0
Test Frequencies: 1.99 GHz (Models with Option 5 Only)			
< 300 Hz		–50	4.0
300 Hz to 1 kHz		–60	3.0
> 1 kHz		–60	2.0
Test Frequency: 2.01 GHz (Models without Option 4 Only)			
< 300 Hz		–50	4.0
300 Hz to 1 kHz		–60	3.0
> 1 kHz		–60	2.0

MG369xC	Firmware Revision:	Operator:
Serial Number:	Date:	Options:

Section 3-8 SSB Phase Noise: Power Line & Fan (S/N 103313 and Lower)

(For serial numbers 103313 and lower)

All MG369xC Models without Option 3 or 3x (2 of 2)

Frequency Offset	Measured Value (dBc)	Upper Limit (dBc)	Measurement Uncertainty (dB)
Test Frequency: 2.19 GHz (Models with Option 4 Only)			
< 300 Hz		–56	4.0
300 Hz to 1 kHz		–66	3.0
> 1 kHz		–66	2.0
Test Frequency: 6.0 GHz			
< 300 Hz		–50	4.0
300 Hz to 1 kHz		–60	3.0
> 1 kHz		–60	2.0
Test Frequency: 10.0 GHz (8 GHz for MG3691C)			
< 300 Hz		–46	4.0
300 Hz to 1 kHz		–56	3.0
> 1 kHz		–60	2.0
Test Frequency: 19.99 GHz (not performed on MG3691C)			
< 300 Hz		–46	4.0
300 Hz to 1 kHz		–56	3.0
> 1 kHz		–60	2.0
Test Frequency: 20.01 GHz (not performed on MG3691C or MG3692C)			
< 300 Hz		–40	4.0
300 Hz to 1 kHz		–50	3.0
> 1 kHz		–54	2.0
Test Frequency: 25.0 GHz (not performed on MG3691C or MG3692C)			
< 300 Hz		–40	4.0
300 Hz to 1 kHz		–50	3.0
> 1 kHz		–54	2.0

MG369xC	Firmware Revision:	Operator:
Serial Number:	Date:	Options:

Section 3-8 SSB Phase Noise (S/N 103313 and Lower) (+ Opt. 3)

(For serial numbers 103313 and lower)

All MG369xC Models with Option 3 (1 of 4)

Frequency Offset	Measured Value (dBc)	Upper Limit (dBc)	Measurement Uncertainty (dB)
Test Frequency: 15 MHz (Models with Option 4 Only)			
10 Hz		–102	4.0
100 Hz		–128	3.0
1 kHz		–142	2.0
10 kHz		–145	2.0
100 kHz		–148	2.0
1 MHz		–148	2.0
Test Frequency: 60 MHz (Models with Option 4 Only)			
10 Hz		–92	4.0
100 Hz		–118	3.0
1 kHz		–139	2.0
10 kHz		–145	2.0
100 kHz		–148	2.0
1 MHz		–148	2.0
Test Frequency: 499 MHz (Models with Option 4 Only)			
10 Hz		–77	4.0
100 Hz		–102	3.0
1 kHz		–124	2.0
10 kHz		–132	2.0
100 kHz		–128	2.0
1 MHz		–145	2.0

MG369xC	Firmware Revision:	Operator:
Serial Number:	Date:	Options:

Section 3-8 SSB Phase Noise (S/N 103313 and Lower) (+ Opt. 3)

(For serial numbers 103313 and lower)

All MG369xC Models with Option 3 (2 of 4)

Frequency Offset	Measured Value (dBc)	Upper Limit (dBc)	Measurement Uncertainty (dB)
Test Frequencies: 600 MHz (Models with Option 5 Only)			
10 Hz		–62	4.0
100 Hz		–85	3.0
1 kHz		–100	2.0
10 kHz		–102	2.0
100 kHz		–102	2.0
1 MHz		–111	2.0
Test Frequencies: 1.99 GHz (Models with Option 5 Only)			
10 Hz		–62	4.0
100 Hz		–85	3.0
1 kHz		–100	2.0
10 kHz		–102	2.0
100 kHz		–102	2.0
1 MHz		–111	2.0
Test Frequency: 2.01 GHz (Models without Option 4 Only)			
10 Hz		–54	4.0
100 Hz		–82	3.0
1 kHz		–106	2.0
10 kHz		–115	2.0
100 kHz		–112	2.0
1 MHz		–138	2.0
Test Frequency: 2.19 GHz (Models with Option 4 Only)			
10 Hz		–63	4.0
100 Hz		–92	3.0
1 kHz		–113	2.0
10 kHz		–121	2.0
100 kHz		–117	2.0
1 MHz		–134	2.0

MG369xC	Firmware Revision:	Operator:
Serial Number:	Date:	Options:

Section 3-8 SSB Phase Noise (S/N 103313 and Lower) (+ Opt. 3)

(For serial numbers 103313 and lower)

All MG369xC Models with Option 3 (3 of 4)

Frequency Offset	Measured Value (dBc)	Upper Limit (dBc)	Measurement Uncertainty (dB)
Test Frequency: 6.0 GHz			
10 Hz		–54	4.0
100 Hz		–82	3.0
1 kHz		–106	2.0
10 kHz		–115	2.0
100 kHz		–112	2.0
1 MHz		–138	2.0
Test Frequency: 10.0 GHz (8 GHz for MG3691C)			
10 Hz		–52	4.0
100 Hz		–75	3.0
1 kHz		–102	2.0
10 kHz		–113	2.0
100 kHz		–115	2.0
1 MHz		–134	2.0
Test Frequency: 19.99 GHz (not performed on MG3691C)			
10 Hz		–45	4.0
100 Hz		–69	3.0
1 kHz		–97	2.0
10 kHz		–109	2.0
100 kHz		–109	2.0
1 MHz		–130	2.0
Test Frequency: 20.01 GHz (not performed on MG3691C or MG3692C)			
10 Hz		–38	4.0
100 Hz		–62	3.0
1 kHz		–90	2.0
10 kHz		–104	2.0
100 kHz		–103	2.0
1 MHz		–122	2.0

MG369xC	Firmware Revision:	Operator:
Serial Number:	Date:	Options:

Section 3-8 SSB Phase Noise (S/N 103313 and Lower) (+ Opt. 3)

(For serial numbers 103313 and lower)

All MG369xC Models with Option 3 (4 of 4)

Frequency Offset	Measured Value (dBc)	Upper Limit (dBc)	Measurement Uncertainty (dB)
Test Frequency: 25.0 GHz (not performed on MG3691C or MG3692C)			
10 Hz		–38	4.0
100 Hz		–62	3.0
1 kHz		–90	2.0
10 kHz		–104	2.0
100 kHz		–103	2.0
1 MHz		–122	2.0

MG369xC	Firmware Revision:	Operator:
Serial Number:	Date:	Options:

Section 3-8 SSB Phase Noise: Power Line & Fan (S/N 103313 and Lower) (+ Opt. 3)

(For serial numbers 103313 and lower)

All MG369xC Models with Option 3 (1 of 2)

Frequency Offset	Measured Value (dBc)	Upper Limit (dBc)	Measurement Uncertainty (dB)
Test Frequency: 15 MHz (Models with Options 4 and 3 Only)			
< 300 Hz		–68	4.0
300 Hz to 1 kHz		–72	3.0
> 1 kHz		–72	2.0
Test Frequency: 60 MHz (Models with Options 4 and 3 Only)			
< 300 Hz		–68	4.0
300 Hz to 1 kHz		–72	3.0
> 1 kHz		–72	2.0
Test Frequency: 499 MHz (Models with Option 4 Only)			
< 300 Hz		–68	4.0
300 Hz to 1 kHz		–72	3.0
> 1 kHz		–72	2.0
Test Frequencies: 600 MHz (Models with Option 5 Only)			
< 300 Hz		–50	4.0
300 Hz to 1 kHz		–60	3.0
> 1 kHz		–60	2.0
Test Frequencies: 1.99 GHz (Models with Option 5 Only)			
< 300 Hz		–50	4.0
300 Hz to 1 kHz		–60	3.0
> 1 kHz		–60	2.0
Test Frequency: 2.01 GHz (Models without Option 4 Only)			
< 300 Hz		–50	4.0
300 Hz to 1 kHz		–60	3.0
> 1 kHz		–60	2.0

MG369xC	Firmware Revision:	Operator:
Serial Number:	Date:	Options:

Section 3-8 SSB Phase Noise: Power Line & Fan (S/N 103313 and Lower) (+ Opt. 3)

(For serial numbers 103313 and lower)

All MG369xC Models with Option 3 (2 of 2)

Frequency Offset	Measured Value (dBc)	Upper Limit (dBc)	Measurement Uncertainty (dB)
Test Frequency: 2.19 GHz (Models with Option 4 Only)			
< 300 Hz		–56	4.0
300 Hz to 1 kHz		–66	3.0
> 1 kHz		–66	2.0
Test Frequency: 6.0 GHz			
< 300 Hz		–50	4.0
300 Hz to 1 kHz		–60	3.0
> 1 kHz		–60	2.0
Test Frequency: 10.0 GHz (8 GHz for MG3691C)			
< 300 Hz		–46	4.0
300 Hz to 1 kHz		–56	3.0
> 1 kHz		–60	2.0
Test Frequency: 19.99 GHz (not performed on MG3691C)			
< 300 Hz		–46	4.0
300 Hz to 1 kHz		–56	3.0
> 1 kHz		–60	2.0
Test Frequency: 20.01 GHz (not performed on MG3691C or MG3692C)			
< 300 Hz		–40	4.0
300 Hz to 1 kHz		–50	3.0
> 1 kHz		–54	2.0
Test Frequency: 25.0 GHz (not performed on MG3691C or MG3692C)			
< 300 Hz		–40	4.0
300 Hz to 1 kHz		–50	3.0
> 1 kHz		–54	2.0

MG369xC	Firmware Revision:	Operator:
Serial Number:	Date:	Options:

Section 3-8 SSB Phase Noise (S/N 103313 and Lower) (+ Opt. 3x)

(For serial numbers 103313 and lower)

All MG369xC Models with Option 3x (1 of 4)

Frequency Offset	Measured Value (dBc)	Upper Limit (dBc)	Measurement Uncertainty (dB)
Test Frequency: 15 MHz (Models with Option 4 Only)			
1 Hz		–89	4.0
10 Hz		–111	4.0
100 Hz		–135	3.0
1 kHz		–142	2.0
10 kHz		–145	2.0
100 kHz		–148	2.0
1 MHz		–148	2.0
Test Frequency: 60 MHz (Models with Option 4 Only)			
1 Hz		–80	4.0
10 Hz		–101	4.0
100 Hz		–124	3.0
1 kHz		–139	2.0
10 kHz		–145	2.0
100 kHz		–148	2.0
1 MHz		–148	2.0
Test Frequency: 499 MHz (Models with Option 4 Only)			
1 Hz		–62	4.0
10 Hz		–88	4.0
100 Hz		–105	3.0
1 kHz		–124	2.0
10 kHz		–132	2.0
100 kHz		–128	2.0
1 MHz		–144	2.0

MG369xC	Firmware Revision:	Operator:
Serial Number:	Date:	Options:

Section 3-8 SSB Phase Noise (S/N 103313 and Lower) (+ Opt. 3x)

(For serial numbers 103313 and lower)

All MG369xC Models with Option 3x (2 of 4)

Frequency Offset	Measured Value (dBc)	Upper Limit (dBc)	Measurement Uncertainty (dB)
Test Frequencies: 600 MHz (Models with Option 5 Only)			
1 Hz		–38	4.0
10 Hz		–68	4.0
100 Hz		–85	3.0
1 kHz		–100	2.0
10 kHz		–102	2.0
100 kHz		–102	2.0
1 MHz		–111	2.0
Test Frequencies: 1.99 GHz (Models with Option 5 Only)			
1 Hz		–38	4.0
10 Hz		–68	4.0
100 Hz		–85	3.0
1 kHz		–100	2.0
10 kHz		–102	2.0
100 kHz		–102	2.0
1 MHz		–111	2.0
Test Frequency: 2.01 GHz (Models without Option 4 Only)			
1 Hz		–41	4.0
10 Hz		–65	4.0
100 Hz		–81	3.0
1 kHz		–106	2.0
10 kHz		–115	2.0
100 kHz		–112	2.0
1 MHz		–138	2.0

MG369xC	Firmware Revision:	Operator:
Serial Number:	Date:	Options:

Section 3-8 SSB Phase Noise (S/N 103313 and Lower) (+ Opt. 3x)

(For serial numbers 103313 and lower)

All MG369xC Models with Option 3x (3 of 4)

Frequency Offset	Measured Value (dBc)	Upper Limit (dBc)	Measurement Uncertainty (dB)
Test Frequency: 2.19 GHz (Models with Option 4 Only)			
1 Hz		–49	4.0
10 Hz		–71	4.0
100 Hz		–93	3.0
1 kHz		–113	2.0
10 kHz		–121	2.0
100 kHz		–117	2.0
1 MHz		–134	2.0
Test Frequency: 6.0 GHz			
1 Hz		–41	4.0
10 Hz		–65	4.0
100 Hz		–81	3.0
1 kHz		–106	2.0
10 kHz		–115	2.0
100 kHz		–112	2.0
1 MHz		–138	2.0
Test Frequency: 10.0 GHz (8 GHz for MG3691C)			
1 Hz		–34	4.0
10 Hz		–62	4.0
100 Hz		–83	3.0
1 kHz		–102	2.0
10 kHz		–113	2.0
100 kHz		–115	2.0
1 MHz		–134	2.0

MG369xC	Firmware Revision:	Operator:
Serial Number:	Date:	Options:

Section 3-8 SSB Phase Noise (S/N 103313 and Lower) (+ Opt. 3x)

(For serial numbers 103313 and lower)

All MG369xC Models with Option 3x (4 of 4)

Frequency Offset	Measured Value (dBc)	Upper Limit (dBc)	Measurement Uncertainty (dB)
Test Frequency: 19.99 GHz (not performed on MG3691C)			
1 Hz		–29	4.0
10 Hz		–59	4.0
100 Hz		–77	3.0
1 kHz		–97	2.0
10 kHz		–109	2.0
100 kHz		–109	2.0
1 MHz		–130	2.0
Test Frequency: 20.01 GHz (not performed on MG3691C or MG3692C)			
1 Hz		–23	4.0
10 Hz		–53	4.0
100 Hz		–70	3.0
1 kHz		–90	2.0
10 kHz		–104	2.0
100 kHz		–103	2.0
1 MHz		–122	2.0
Test Frequency: 25.0 GHz (not performed on MG3691C or MG3692C)			
10 Hz		–23	4.0
10 Hz		–53	4.0
100 Hz		–70	3.0
1 kHz		–90	2.0
10 kHz		–104	2.0
100 kHz		–103	2.0
1 MHz		–122	2.0

MG369xC	Firmware Revision:	Operator:
Serial Number:	Date:	Options:

Section 3-8 SSB Phase Noise: Power Line & Fan (S/N 103313 and Lower) (+ Opt. 3x)

(For serial numbers 103313 and lower)

All MG369xC Models with Option 3x (1 of 2)

Frequency Offset	Measured Value (dBc)	Upper Limit (dBc)	Measurement Uncertainty (dB)
Test Frequency: 15 MHz (Models with Options 4 Only)			
< 300 Hz		–68	4.0
300 Hz to 1 kHz		–72	3.0
> 1 kHz		–72	2.0
Test Frequency: 60 MHz (Models with Options 4 Only)			
< 300 Hz		–68	4.0
300 Hz to 1 kHz		–72	3.0
> 1 kHz		–72	2.0
Test Frequency: 499 MHz (Models with Option 4 Only)			
< 300 Hz		–68	4.0
300 Hz to 1 kHz		–72	3.0
> 1 kHz		–72	2.0
Test Frequencies: 600 MHz (Models with Option 5 Only)			
< 300 Hz		–50	4.0
300 Hz to 1 kHz		–60	3.0
> 1 kHz		–60	2.0
Test Frequencies: 1.99 GHz (Models with Option 5 Only)			
< 300 Hz		–50	4.0
300 Hz to 1 kHz		–60	3.0
> 1 kHz		–60	2.0
Test Frequency: 2.01 GHz (Models without Option 4 Only)			
< 300 Hz		–50	4.0
300 Hz to 1 kHz		–60	3.0
> 1 kHz		–60	2.0

MG369xC	Firmware Revision:	Operator:
Serial Number:	Date:	Options:

Section 3-8 SSB Phase Noise: Power Line & Fan (S/N 103313 and Lower) (+ Opt. 3x)

(For serial numbers 103313 and lower)

All MG369xC Models with Option 3x (2 of 2)

Frequency Offset	Measured Value (dBc)	Upper Limit (dBc)	Measurement Uncertainty (dB)
Test Frequency: 2.19 GHz (Models with Option 4 Only)			
< 300 Hz		–56	4.0
300 Hz to 1 kHz		–66	3.0
> 1 kHz		–66	2.0
Test Frequency: 6.0 GHz			
< 300 Hz		–50	4.0
300 Hz to 1 kHz		–60	3.0
> 1 kHz		–60	2.0
Test Frequency: 10.0 GHz (8 GHz for MG3691C)			
< 300 Hz		–46	4.0
300 Hz to 1 kHz		–56	3.0
> 1 kHz		–60	2.0
Test Frequency: 19.99 GHz (not performed on MG3691C)			
< 300 Hz		–46	4.0
300 Hz to 1 kHz		–56	3.0
> 1 kHz		–60	2.0
Test Frequency: 20.01 GHz (not performed on MG3691C or MG3692C)			
< 300 Hz		–40	4.0
300 Hz to 1 kHz		–50	3.0
> 1 kHz		–54	2.0
Test Frequency: 25.0 GHz (not performed on MG3691C or MG3692C)			
< 300 Hz		–40	4.0
300 Hz to 1 kHz		–50	3.0
> 1 kHz		–54	2.0

MG369xC	Firmware Revision:	Operator:
Serial Number:	Date:	Options:

Section 3-8 SSB Phase Noise (S/N 103314 and Higher) (No Opt. 3 or 3x)

(For serial numbers 103314 and higher)

All MG369xC Models without Option 3 or 3x (1 of 4)

Frequency Offset	Measured Value (dBc)	Upper Limit (dBc)	Measurement Uncertainty (dB)
Test Frequency: 15 MHz (Models with Option 4 Only)			
10 Hz		–102	4.0
100 Hz		–128	3.0
1 kHz		–142	2.0
10 kHz		–145	2.0
100 kHz		–145	2.0
1 MHz		–145	2.0
Test Frequency: 60 MHz (Models with Option 4 Only)			
10 Hz		–92	4.0
100 Hz		–122	3.0
1 kHz		–140	2.0
10 kHz		–142	2.0
100 kHz		–143	2.0
1 MHz		–145	2.0
Test Frequency: 499 MHz (Models with Option 4 Only)			
10 Hz		–75	4.0
100 Hz		–102	3.0
1 kHz		–120	2.0
10 kHz		–118	2.0
100 kHz		–118	2.0
1 MHz		–143	2.0

MG369xC	Firmware Revision:	Operator:
Serial Number:	Date:	Options:

Section 3-8 SSB Phase Noise (S/N 103314 and Higher) (No Opt. 3 or 3x)

(For serial numbers 103314 and higher)

All MG369xC Models without Option 3 or 3x (2 of 4)

Frequency Offset	Measured Value (dBc)	Upper Limit (dBc)	Measurement Uncertainty (dB)
Test Frequencies: 600 MHz (Models with Option 5 Only)			
10 Hz		–62	4.0
100 Hz		–85	3.0
1 kHz		–100	2.0
10 kHz		–102	2.0
100 kHz		–102	2.0
1 MHz		–111	2.0
Test Frequencies: 1.99 GHz (Models with Option 5 Only)			
10 Hz		–62	4.0
100 Hz		–85	3.0
1 kHz		–100	2.0
10 kHz		–102	2.0
100 kHz		–102	2.0
1 MHz		–111	2.0
Test Frequency: 2.01 GHz (Models without Option 4 Only)			
10 Hz		–54	4.0
100 Hz		–81	3.0
1 kHz		–102	2.0
10 kHz		–103	2.0
100 kHz		–106	2.0
1 MHz		–128	2.0
Test Frequency: 2.19 GHz (Models with Option 4 Only)			
10 Hz		–65	4.0
100 Hz		–86	3.0
1 kHz		–113	2.0
10 kHz		–111	2.0
100 kHz		–114	2.0
1 MHz		–133	2.0

MG369xC	Firmware Revision:	Operator:
Serial Number:	Date:	Options:

Section 3-8 SSB Phase Noise (S/N 103314 and Higher) (No Opt. 3 or 3x)

(For serial numbers 103314 and higher)

All MG369xC Models without Option 3 or 3x (3 of 4)

Frequency Offset	Measured Value (dBc)	Upper Limit (dBc)	Measurement Uncertainty (dB)
Test Frequency: 6.0 GHz			
10 Hz		–54	4.0
100 Hz		–81	3.0
1 kHz		–102	2.0
10 kHz		–103	2.0
100 kHz		–106	2.0
1 MHz		–128	2.0
Test Frequency: 10.0 GHz (8 GHz for MG3691C)			
10 Hz		–52	4.0
100 Hz		–75	3.0
1 kHz		–98	2.0
10 kHz		–104	2.0
100 kHz		–106	2.0
1 MHz		–126	2.0
Test Frequency: 19.99 GHz (not performed on MG3691C)			
10 Hz		–45	4.0
100 Hz		–69	3.0
1 kHz		–92	2.0
10 kHz		–98	2.0
100 kHz		–98	2.0
1 MHz		–124	2.0
Test Frequency: 20.01 GHz (not performed on MG3691C or MG3692C)			
10 Hz		–38	4.0
100 Hz		–62	3.0
1 kHz		–86	2.0
10 kHz		–92	2.0
100 kHz		–92	2.0
1 MHz		–118	2.0

MG369xC	Firmware Revision:	Operator:
Serial Number:	Date:	Options:

Section 3-8 SSB Phase Noise (S/N 103314 and Higher) (No Opt. 3 or 3x)

(For serial numbers 103314 and higher)

All MG369xC Models without Option 3 or 3x (4 of 4)

Frequency Offset	Measured Value (dBc)	Upper Limit (dBc)	Measurement Uncertainty (dB)
Test Frequency: 25.0 GHz (not performed on MG3691C or MG3692C)			
10 Hz		–38	4.0
100 Hz		–62	3.0
1 kHz		–86	2.0
10 kHz		–92	2.0
100 kHz		–92	2.0
1 MHz		–118	2.0

MG369xC	Firmware Revision:	Operator:
Serial Number:	Date:	Options:

Section 3-8 SSB Phase Noise: Power Line & Fan (S/N 103314 and Higher)

(For serial numbers 103314 and higher)

All MG369xC Models without Option 3 or 3x (1 of 2)

Frequency Offset	Measured Value (dBc)	Upper Limit (dBc)	Measurement Uncertainty (dB)
Test Frequency: 15 MHz (Models with Option 4 Only)			
< 300 Hz		–68	4.0
300 Hz to 1 kHz		–72	3.0
> 1 kHz		–72	2.0
Test Frequency: 60 MHz (Models with Option 4 Only)			
< 300 Hz		–68	4.0
300 Hz to 1 kHz		–72	3.0
> 1 kHz		–72	2.0
Test Frequency: 499 MHz (Models with Option 4 Only)			
< 300 Hz		–68	4.0
300 Hz to 1 kHz		–72	3.0
> 1 kHz		–72	2.0
Test Frequencies: 600 MHz (Models with Option 5 Only)			
< 300 Hz		–50	4.0
300 Hz to 1 kHz		–60	3.0
> 1 kHz		–60	2.0
Test Frequencies: 1.99 GHz (Models with Option 5 Only)			
< 300 Hz		–50	4.0
300 Hz to 1 kHz		–60	3.0
> 1 kHz		–60	2.0
Test Frequency: 2.01 GHz (Models without Option 4 Only)			
< 300 Hz		–50	4.0
300 Hz to 1 kHz		–60	3.0
> 1 kHz		–60	2.0

MG369xC	Firmware Revision:	Operator:
Serial Number:	Date:	Options:

Section 3-8 SSB Phase Noise: Power Line & Fan (S/N 103314 and Higher)

(For serial numbers 103314 and higher)

All MG369xC Models without Option 3 or 3x (2 of 2)

Frequency Offset	Measured Value (dBc)	Upper Limit (dBc)	Measurement Uncertainty (dB)
Test Frequency: 2.19 GHz (Models with Option 4 Only)			
< 300 Hz		–56	4.0
300 Hz to 1 kHz		–66	3.0
> 1 kHz		–66	2.0
Test Frequency: 6.0 GHz			
< 300 Hz		–50	4.0
300 Hz to 1 kHz		–60	3.0
> 1 kHz		–60	2.0
Test Frequency: 10.0 GHz (8 GHz for MG3691C)			
< 300 Hz		–46	4.0
300 Hz to 1 kHz		–56	3.0
> 1 kHz		–60	2.0
Test Frequency: 19.99 GHz (not performed on MG3691C)			
< 300 Hz		–46	4.0
300 Hz to 1 kHz		–56	3.0
> 1 kHz		–60	2.0
Test Frequency: 20.01 GHz (not performed on MG3691C or MG3692C)			
< 300 Hz		–40	4.0
300 Hz to 1 kHz		–50	3.0
> 1 kHz		–54	2.0
Test Frequency: 25.0 GHz (not performed on MG3691C or MG3692C)			
< 300 Hz		–40	4.0
300 Hz to 1 kHz		–50	3.0
> 1 kHz		–54	2.0

MG369xC	Firmware Revision:	Operator:
Serial Number:	Date:	Options:

Section 3-8 SSB Phase Noise (S/N 103314 and Higher) (+ Opt. 3)

(For serial numbers 103314 and higher)

All MG369xC Models with Option 3 (1 of 4)

Frequency Offset	Measured Value (dBc)	Upper Limit (dBc)	Measurement Uncertainty (dB)
Test Frequency: 15 MHz (Models with Option 4 Only)			
10 Hz		–102	4.0
100 Hz		–128	3.0
1 kHz		–142	2.0
10 kHz		–145	2.0
100 kHz		–148	2.0
1 MHz		–148	2.0
Test Frequency: 60 MHz (Models with Option 4 Only)			
10 Hz		–92	4.0
100 Hz		–122	3.0
1 kHz		–140	2.0
10 kHz		–145	2.0
100 kHz		–148	2.0
1 MHz		–148	2.0
Test Frequency: 499 MHz (Models with Option 4 Only)			
10 Hz		–77	4.0
100 Hz		–102	3.0
1 kHz		–124	2.0
10 kHz		–132	2.0
100 kHz		–128	2.0
1 MHz		–145	2.0

MG369xC	Firmware Revision:	Operator:
Serial Number:	Date:	Options:

Section 3-8 SSB Phase Noise (S/N 103314 and Higher) (+ Opt. 3)

(For serial numbers 103314 and higher)

All MG369xC Models with Option 3 (2 of 4)

Frequency Offset	Measured Value (dBc)	Upper Limit (dBc)	Measurement Uncertainty (dB)
Test Frequencies: 600 MHz (Models with Option 5 Only)			
10 Hz		–62	4.0
100 Hz		–85	3.0
1 kHz		–100	2.0
10 kHz		–102	2.0
100 kHz		–102	2.0
1 MHz		–111	2.0
Test Frequencies: 1.99 GHz (Models with Option 5 Only)			
10 Hz		–64	4.0
100 Hz		–85	3.0
1 kHz		–100	2.0
10 kHz		–102	2.0
100 kHz		–102	2.0
1 MHz		–111	2.0
Test Frequency: 2.01 GHz (Models without Option 4 Only)			
10 Hz		–54	4.0
100 Hz		–82	3.0
1 kHz		–106	2.0
10 kHz		–115	2.0
100 kHz		–112	2.0
1 MHz		–138	2.0
Test Frequency: 2.19 GHz (Models with Option 4 Only)			
10 Hz		–66	4.0
100 Hz		–92	3.0
1 kHz		–113	2.0
10 kHz		–121	2.0
100 kHz		–117	2.0
1 MHz		–135	2.0

MG369xC	Firmware Revision:	Operator:
Serial Number:	Date:	Options:

Section 3-8 SSB Phase Noise (S/N 103314 and Higher) (+ Opt. 3)

(For serial numbers 103314 and higher)

All MG369xC Models with Option 3 (3 of 4)

Frequency Offset	Measured Value (dBc)	Upper Limit (dBc)	Measurement Uncertainty (dB)
Test Frequency: 6.0 GHz			
10 Hz		–54	4.0
100 Hz		–82	3.0
1 kHz		–106	2.0
10 kHz		–115	2.0
100 kHz		–112	2.0
1 MHz		–138	2.0
Test Frequency: 10.0 GHz (8 GHz for MG3691C)			
10 Hz		–52	4.0
100 Hz		–75	3.0
1 kHz		–102	2.0
10 kHz		–113	2.0
100 kHz		–115	2.0
1 MHz		–134	2.0
Test Frequency: 19.99 GHz (not performed on MG3691C)			
10 Hz		–52	4.0
100 Hz		–69	3.0
1 kHz		–100	2.0
10 kHz		–109	2.0
100 kHz		–109	2.0
1 MHz		–130	2.0
Test Frequency: 20.01 GHz (not performed on MG3691C or MG3692C)			
10 Hz		–45	4.0
100 Hz		–63	3.0
1 kHz		–94	2.0
10 kHz		–104	2.0
100 kHz		–103	2.0
1 MHz		–122	2.0

MG369xC	Firmware Revision:	Operator:
Serial Number:	Date:	Options:

Section 3-8 SSB Phase Noise (S/N 103314 and Higher) (+ Opt. 3)

(For serial numbers 103314 and higher)

All MG369xC Models with Option 3 (4 of 4)

Frequency Offset	Measured Value (dBc)	Upper Limit (dBc)	Measurement Uncertainty (dB)
Test Frequency: 25.0 GHz (not performed on MG3691C or MG3692C)			
10 Hz		–45	4.0
100 Hz		–63	3.0
1 kHz		–94	2.0
10 kHz		–104	2.0
100 kHz		–103	2.0
1 MHz		–122	2.0

MG369xC	Firmware Revision:	Operator:
Serial Number:	Date:	Options:

Section 3-8 SSB Phase Noise: Power Line & Fan (S/N 103314 and Higher) (+ Opt. 3)

(For serial numbers 103314 and higher)

All MG369xC Models with Option 3 (1 of 2)

Frequency Offset	Measured Value (dBc)	Upper Limit (dBc)	Measurement Uncertainty (dB)
Test Frequency: 15 MHz (Models with Options 4 Only)			
< 300 Hz		–68	4.0
300 Hz to 1 kHz		–72	3.0
> 1 kHz		–72	2.0
Test Frequency: 60 MHz (Models with Options 4 Only)			
< 300 Hz		–68	4.0
300 Hz to 1 kHz		–72	3.0
> 1 kHz		–72	2.0
Test Frequency: 499 MHz (Models with Option 4 Only)			
< 300 Hz		–68	4.0
300 Hz to 1 kHz		–72	3.0
> 1 kHz		–72	2.0
Test Frequencies: 600 MHz (Models with Option 5 Only)			
< 300 Hz		–50	4.0
300 Hz to 1 kHz		–60	3.0
> 1 kHz		–60	2.0
Test Frequencies: 1.99 GHz (Models with Option 5 Only)			
< 300 Hz		–50	4.0
300 Hz to 1 kHz		–60	3.0
> 1 kHz		–60	2.0
Test Frequency: 2.01 GHz (Models without Option 4 Only)			
< 300 Hz		–50	4.0
300 Hz to 1 kHz		–60	3.0
> 1 kHz		–60	2.0

MG369xC	Firmware Revision:	Operator:
Serial Number:	Date:	Options:

Section 3-8 SSB Phase Noise: Power Line & Fan (S/N 103314 and Higher) (+ Opt. 3)

(For serial numbers 103314 and higher)

All MG369xC Models with Option 3 (2 of 2)

Frequency Offset	Measured Value (dBc)	Upper Limit (dBc)	Measurement Uncertainty (dB)
Test Frequency: 2.19 GHz (Models with Option 4 Only)			
< 300 Hz		–56	4.0
300 Hz to 1 kHz		–66	3.0
> 1 kHz		–66	2.0
Test Frequency: 6.0 GHz			
< 300 Hz		–50	4.0
300 Hz to 1 kHz		–60	3.0
> 1 kHz		–60	2.0
Test Frequency: 10.0 GHz (8 GHz for MG3691C)			
< 300 Hz		–46	4.0
300 Hz to 1 kHz		–56	3.0
> 1 kHz		–60	2.0
Test Frequency: 19.99 GHz (not performed on MG3691C)			
< 300 Hz		–46	4.0
300 Hz to 1 kHz		–56	3.0
> 1 kHz		–60	2.0
Test Frequency: 20.01 GHz (not performed on MG3691C or MG3692C)			
< 300 Hz		–40	4.0
300 Hz to 1 kHz		–50	3.0
> 1 kHz		–54	2.0
Test Frequency: 25.0 GHz (not performed on MG3691C or MG3692C)			
< 300 Hz		–40	4.0
300 Hz to 1 kHz		–50	3.0
> 1 kHz		–54	2.0

MG369xC	Firmware Revision:	Operator:
Serial Number:	Date:	Options:

Section 3-8 SSB Phase Noise (S/N 103314 and Higher) (+ Opt. 3x)

(For serial numbers 103314 and higher)

All MG369xC Models with Option 3x (1 of 4)

Frequency Offset	Measured Value (dBc)	Upper Limit (dBc)	Measurement Uncertainty (dB)
Test Frequency: 15 MHz (Models with Option 4 Only)			
1 Hz		–94	4.0
10 Hz		–118	4.0
100 Hz		–136	3.0
1 kHz		–142	2.0
10 kHz		–145	2.0
100 kHz		–148	2.0
1 MHz		–148	2.0
Test Frequency: 60 MHz (Models with Option 4 Only)			
1 Hz		–83	4.0
10 Hz		–109	4.0
100 Hz		–125	3.0
1 kHz		–140	2.0
10 kHz		–145	2.0
100 kHz		–148	2.0
1 MHz		–148	2.0
Test Frequency: 499 MHz (Models with Option 4 Only)			
1 Hz		–67	4.0
10 Hz		–91	4.0
100 Hz		–107	3.0
1 kHz		–124	2.0
10 kHz		–132	2.0
100 kHz		–128	2.0
1 MHz		–144	2.0

MG369xC	Firmware Revision:	Operator:
Serial Number:	Date:	Options:

Section 3-8 SSB Phase Noise (S/N 103314 and Higher) (+ Opt. 3x)

(For serial numbers 103314 and higher)

All MG369xC Models with Option 3x (2 of 4)

Frequency Offset	Measured Value (dBc)	Upper Limit (dBc)	Measurement Uncertainty (dB)
Test Frequencies: 600 MHz (Models with Option 5 Only)			
1 Hz		–38	4.0
10 Hz		–68	4.0
100 Hz		–85	3.0
1 kHz		–100	2.0
10 kHz		–102	2.0
100 kHz		–102	2.0
1 MHz		–111	2.0
Test Frequencies: 1.99 GHz (Models with Option 5 Only)			
1 Hz		–38	4.0
10 Hz		–68	4.0
100 Hz		–85	3.0
1 kHz		–100	2.0
10 kHz		–102	2.0
100 kHz		–102	2.0
1 MHz		–111	2.0
Test Frequency: 2.01 GHz (Models without Option 4 Only)			
1 Hz		–46	4.0
10 Hz		–70	4.0
100 Hz		–86	3.0
1 kHz		–106	2.0
10 kHz		–115	2.0
100 kHz		–112	2.0
1 MHz		–138	2.0

MG369xC	Firmware Revision:	Operator:
Serial Number:	Date:	Options:

Section 3-8 SSB Phase Noise (S/N 103314 and Higher) (+ Opt. 3x)

(For serial numbers 103314 and higher)

All MG369xC Models with Option 3x (3 of 4)

Frequency Offset	Measured Value (dBc)	Upper Limit (dBc)	Measurement Uncertainty (dB)
Test Frequency: 2.19 GHz (Models with Option 4 Only)			
1 Hz		–53	4.0
10 Hz		–77	4.0
100 Hz		–95	3.0
1 kHz		–113	2.0
10 kHz		–121	2.0
100 kHz		–117	2.0
1 MHz		–135	2.0
Test Frequency: 6.0 GHz			
1 Hz		–46	4.0
10 Hz		–70	4.0
100 Hz		–86	3.0
1 kHz		–106	2.0
10 kHz		–115	2.0
100 kHz		–112	2.0
1 MHz		–138	2.0
Test Frequency: 10.0 GHz (8 GHz for MG3691C)			
1 Hz		–38	4.0
10 Hz		–68	4.0
100 Hz		–83	3.0
1 kHz		–102	2.0
10 kHz		–113	2.0
100 kHz		–115	2.0
1 MHz		–134	2.0

MG369xC	Firmware Revision:	Operator:
Serial Number:	Date:	Options:

Section 3-8 SSB Phase Noise (S/N 103314 and Higher) (+ Opt. 3x)

(For serial numbers 103314 and higher)

All MG369xC Models with Option 3x (4 of 4)

Frequency Offset	Measured Value (dBc)	Upper Limit (dBc)	Measurement Uncertainty (dB)
Test Frequency: 19.99 GHz (not performed on MG3691C)			
1 Hz		–35	4.0
10 Hz		–64	4.0
100 Hz		–80	3.0
1 kHz		–100	2.0
10 kHz		–109	2.0
100 kHz		–109	2.0
1 MHz		–130	2.0
Test Frequency: 20.01 GHz (not performed on MG3691C or MG3692C)			
1 Hz		–29	4.0
10 Hz		–58	4.0
100 Hz		–74	3.0
1 kHz		–94	2.0
10 kHz		–104	2.0
100 kHz		–103	2.0
1 MHz		–122	2.0
Test Frequency: 25.0 GHz (not performed on MG3691C or MG3692C)			
10 Hz		–29	4.0
10 Hz		–58	4.0
100 Hz		–74	3.0
1 kHz		–94	2.0
10 kHz		–104	2.0
100 kHz		–103	2.0
1 MHz		–122	2.0

MG369xC	Firmware Revision:	Operator:
Serial Number:	Date:	Options:

Section 3-8 SSB Phase Noise: Power Line & Fan (S/N 103314 and Higher) (+ Opt. 3x)

(For serial numbers 103314 and higher)

All MG369xC Models with Option 3x (1 of 2)

Frequency Offset	Measured Value (dBc)	Upper Limit (dBc)	Measurement Uncertainty (dB)
Test Frequency: 15 MHz (Models with Options 4 Only)			
< 300 Hz		–68	4.0
300 Hz to 1 kHz		–72	3.0
> 1 kHz		–72	2.0
Test Frequency: 60 MHz (Models with Options 4 Only)			
< 300 Hz		–68	4.0
300 Hz to 1 kHz		–72	3.0
> 1 kHz		–72	2.0
Test Frequency: 499 MHz (Models with Option 4 Only)			
< 300 Hz		–68	4.0
300 Hz to 1 kHz		–72	3.0
> 1 kHz		–72	2.0
Test Frequencies: 600 MHz (Models with Option 5 Only)			
< 300 Hz		–50	4.0
300 Hz to 1 kHz		–60	3.0
> 1 kHz		–60	2.0
Test Frequencies: 1.99 GHz (Models with Option 5 Only)			
< 300 Hz		–50	4.0
300 Hz to 1 kHz		–60	3.0
> 1 kHz		–60	2.0
Test Frequency: 2.01 GHz (Models without Option 4 Only)			
< 300 Hz		–50	4.0
300 Hz to 1 kHz		–60	3.0
> 1 kHz		–60	2.0

MG369xC	Firmware Revision:	Operator:
Serial Number:	Date:	Options:

Section 3-8 SSB Phase Noise: Power Line & Fan (S/N 103314 and Higher) (+ Opt. 3x)

(For serial numbers 103314 and higher)

All MG369xC Models with Option 3x (2 of 2)

Frequency Offset	Measured Value (dBc)	Upper Limit (dBc)	Measurement Uncertainty (dB)
Test Frequency: 2.19 GHz (Models with Option 4 Only)			
< 300 Hz		–56	4.0
300 Hz to 1 kHz		–66	3.0
> 1 kHz		–66	2.0
Test Frequency: 6.0 GHz			
< 300 Hz		–50	4.0
300 Hz to 1 kHz		–60	3.0
> 1 kHz		–60	2.0
Test Frequency: 10.0 GHz (8 GHz for MG3691C)			
< 300 Hz		–46	4.0
300 Hz to 1 kHz		–56	3.0
> 1 kHz		–60	2.0
Test Frequency: 19.99 GHz (not performed on MG3691C)			
< 300 Hz		–46	4.0
300 Hz to 1 kHz		–56	3.0
> 1 kHz		–60	2.0
Test Frequency: 20.01 GHz (not performed on MG3691C or MG3692C)			
< 300 Hz		–40	4.0
300 Hz to 1 kHz		–50	3.0
> 1 kHz		–54	2.0
Test Frequency: 25.0 GHz (not performed on MG3691C or MG3692C)			
< 300 Hz		–40	4.0
300 Hz to 1 kHz		–50	3.0
> 1 kHz		–54	2.0

MG369xC	Firmware Revision:	Operator:
Serial Number:	Date:	Options:

Section 3-9 Power Level Log Conformity (Non-pulse Mode)

For MG3691C, MG3692C, MG3693C, MG3694C (1 of 2)
Power Sensor: For models with K connectors use N5532B-504 with N to K adapter (Anritsu P/N 34NFK50)

Set L1 [a]	Set F1 to 2.199 GHz (Option 4) or 1.999 GHz (Option 5) Only			Set F1 to 2.201 GHz (Option 4) or 2.001 GHz (All Others)			Specification (dBm)	Measurement Uncertainty (dB)
	Measured Power Non-pulse Mode (dBm)	Offset Value (dB) (See Section A-3)	Final Value (dBm)	Measured Power Non-pulse Mode (dBm)	Offset Value (dB) (See Section A-3)	Final Value (dBm)		
+26 dBm							+25 to +27	0.28
+25 dBm							+24 to +26	0.28
+24 dBm							+23 to +25	0.28
+23 dBm							+22 to +24	0.28
+22 dBm							+21 to +23	0.28
+21 dBm							+20 to +22	0.28
+20 dBm							+19 to +21	0.15
+19 dBm							+18 to +20	0.15
+18 dBm							+17 to +19	0.15
+17 dBm							+16 to +18	0.15
+16 dBm							+15 to +17	0.15
+15 dBm							+14 to +16	0.15
+14 dBm							+13 to +15	0.15
+13 dBm							+12 to +14	0.15
+12 dBm							+11 to +13	0.15
+11 dBm							+10 to +12	0.15
+10 dBm							+9 to +11	0.15
+9 dBm							+8 to +10	0.15
+8 dBm							+7 to +9	0.15
+7 dBm							+6 to +8	0.15
+6 dBm							+5 to +7	0.15
+5 dBm							+4 to +6	0.15
+4 dBm							+3 to +5	0.15
+3 dBm							+2 to +4	0.15

MG369xC	Firmware Revision:	Operator:
Serial Number:	Date:	Options:

Section 3-9 Power Level Log Conformity (Non-pulse Mode)

For MG3691C, MG3692C, MG3693C, MG3694C (2 of 2)
Power Sensor: For models with K connectors use N5532B-504 with N to K adapter (Anritsu P/N 34NFK50)

	Set F1 to 2.199 GHz (Option 4) or 1.999 GHz (Option 5) Only			Set F1 to 2.201 GHz (Option 4) or 2.001 GHz (All Others)				
Set L1 [a]	Measured Power Non-pulse Mode (dBm)	Offset Value (dB) (See Section A-3)	Final Value (dBm)	Measured Power Non-pulse Mode (dBm)	Offset Value (dB) (See Section A-3)	Final Value (dBm)	Specification (dBm)	Measurement Uncertainty (dB)
+2 dBm							+1 to +3	0.15
+1 dBm							+0 to +2	0.15
+0 dBm							–1 to +1	0.15
Calculated Offset		N/A	N/A		N/A	N/A	N/A	N/A
–1 dBm							–2 to +0	0.016
–2 dBm							–3 to –1	0.016
–3 dBm							–4 to –2	0.016
–4 dBm							–5 to –3	0.016
–5 dBm							–6 to –4	0.016

a. Start with the Maximum Leveled Output Power within instrument specification (see the technical data sheet).

MG369xC	Firmware Revision:	Operator:
Serial Number:	Date:	Options:

Section 3-9 Power Level Log Conformity (Pulse Mode)

For MG3691C, MG3692C, MG3693C, MG3694C (1 of 2)
Power Sensor: For models with K connectors use N5532B-504 with N to K adapter (Anritsu P/N 34NFK50)

	Set F1 to 2.199 GHz (Option 4) or 1.999 GHz (Option 5) Only			Set F1 to 2.201 GHz (Option 4) or 2.001 GHz (All Others)				
Set L1 [a]	Measured Power Pulse Mode (dBm)	Offset Value (dB) (See Section A-3)	Final Value (dBm)	Measured Power Pulse Mode (dBm)	Offset Value (dB) (See Section A-3)	Final Value (dBm)	Specification (dBm)	Measurement Uncertainty (dB)
+26 dBm							+25 to +27	0.28
+25 dBm							+24 to +26	0.28
+24 dBm							+23 to +25	0.28
+23 dBm							+22 to +24	0.28
+22 dBm							+21 to +23	0.28
+21 dBm							+20 to +22	0.28
+20 dBm							+19 to +21	0.15
+19 dBm							+18 to +20	0.15
+18 dBm							+17 to +19	0.15
+17 dBm							+16 to +18	0.15
+16 dBm							+15 to +17	0.15
+15 dBm							+14 to +16	0.15
+14 dBm							+13 to +15	0.15
+13 dBm							+12 to +14	0.15
+12 dBm							+11 to +13	0.15
+11 dBm							+10 to +12	0.15
+10 dBm							+9 to +11	0.15
+9 dBm							+8 to +10	0.15
+8 dBm							+7 to +9	0.15
+7 dBm							+6 to +8	0.15
+6 dBm							+5 to +7	0.15
+5 dBm							+4 to +6	0.15
+4 dBm							+3 to +5	0.15
+3 dBm							+2 to +4	0.15

MG369xC	Firmware Revision:	Operator:
Serial Number:	Date:	Options:

Section 3-9 Power Level Log Conformity (Pulse Mode)

For MG3691C, MG3692C, MG3693C, MG3694C (2 of 2)
Power Sensor: For models with K connectors use N5532B-504 with N to K adapter (Anritsu P/N 34NFK50)

Set L1 [a]	Set F1 to 2.199 GHz (Option 4) or 1.999 GHz (Option 5) Only			Set F1 to 2.201 GHz (Option 4) or 2.001 GHz (All Others)			Specification (dBm)	Measurement Uncertainty (dB)
	Measured Power Pulse Mode (dBm)	Offset Value (dB) (See Section A-3)	Final Value (dBm)	Measured Power Pulse Mode (dBm)	Offset Value (dB) (See Section A-3)	Final Value (dBm)		
+2 dBm							+1 to +3	0.15
+1 dBm							+0 to +2	0.15
+0 dBm							–1 to +1	0.15
Calculated Offset		N/A	N/A		N/A	N/A	N/A	N/A
–1 dBm							–2 to +0	0.016
–2 dBm							–3 to –1	0.016
–3 dBm							–4 to –2	0.016
–4 dBm							–5 to –3	0.016
–5 dBm							–6 to –4	0.016

a. Start with the Maximum Leveled Output Power within instrument specification (see the technical data sheet).

MG369xC	Firmware Revision:	Operator:
Serial Number:	Date:	Options:

Section 3-9 Power Level Log Conformity (Non-pulse Mode) (MG3695C Only)

For MG3695C (1 of 2)
Power Sensor: For models with V connectors use N5532B-504 with N to K and V to K adapter (Anritsu P/N 34VKF50 and 34NFK50)

Set L1 [a]	Set F1 to 2.199 GHz (Option 4) or 1.999 GHz (Option 5) Only			Set F1 to 2.201 GHz (Option 4) or 2.001 GHz (All Others)			Specification (dBm)	Measurement Uncertainty (dB)
	Measured Power Non-pulse Mode (dBm)	Offset Value (dB) (See Section A-3)	Final Value (dBm)	Measured Power Non-pulse Mode (dBm)	Offset Value (dB) (See Section A-3)	Final Value (dBm)		
+26 dBm							+25 to +27	0.28
+25 dBm							+24 to +26	0.28
+24 dBm							+23 to +25	0.28
+23 dBm							+22 to +24	0.28
+22 dBm							+21 to +23	0.28
+21 dBm							+20 to +22	0.28
+20 dBm							+19 to +21	0.15
+19 dBm							+18 to +20	0.15
+18 dBm							+17 to +19	0.15
+17 dBm							+16 to +18	0.15
+16 dBm							+15 to +17	0.15
+15 dBm							+14 to +16	0.15
+14 dBm							+13 to +15	0.15
+13 dBm							+12 to +14	0.15
+12 dBm							+11 to +13	0.15
+11 dBm							+10 to +12	0.15
+10 dBm							+9 to +11	0.15
+9 dBm							+8 to +10	0.15
+8 dBm							+7 to +9	0.15
+7 dBm							+6 to +8	0.15
+6 dBm							+5 to +7	0.15
+5 dBm							+4 to +6	0.15
+4 dBm							+3 to +5	0.15

MG369xC	Firmware Revision:	Operator:
Serial Number:	Date:	Options:

Section 3-9 Power Level Log Conformity (Non-pulse Mode) (MG3695C Only)

For MG3695C (2 of 2)
Power Sensor: For models with V connectors use N5532B-504 with N to K and V to K adapter (Anritsu P/N 34VKF50 and 34NFK50)

Set L1 [a]	Set F1 to 2.199 GHz (Option 4) or 1.999 GHz (Option 5) Only			Set F1 to 2.201 GHz (Option 4) or 2.001 GHz (All Others)			Specification (dBm)	Measurement Uncertainty (dB)
	Measured Power Non-pulse Mode (dBm)	Offset Value (dB) (See Section A-3)	Final Value (dBm)	Measured Power Non-pulse Mode (dBm)	Offset Value (dB) (See Section A-3)	Final Value (dBm)		
+3 dBm							+2 to +4	0.15
+2 dBm							+1 to +3	0.15
+1 dBm							+0 to +2	0.15
+0 dBm							–1 to +1	0.15
Calculated Offset		N/A	N/A		N/A	N/A	N/A	N/A
–1 dBm							–2 to +0	0.016
–2 dBm							–3 to –1	0.016
–3 dBm							–4 to –2	0.016
–4 dBm							–5 to –3	0.016
–5 dBm							–6 to –4	0.016

a. Start with the Maximum Leveled Output Power within instrument specification. See the technical data sheet.

MG369xC	Firmware Revision:	Operator:
Serial Number:	Date:	Options:

Section 3-9 Power Level Log Conformity (Pulse Mode - MG3695C Only)

For MG3695C (1 of 2)
Power Sensor: For models with V connectors use N5532B-504 with N to K and V to K adapter (Anritsu P/N 34VKF50 and 34NFK50)

Set L1 [a]	Set F1 to 2.199 GHz (Option 4) or 1.999 GHz (Option 5) Only			Set F1 to 2.201 GHz (Option 4) or 2.001 GHz (All Others)			Specification (dBm)	Measurement Uncertainty (dB)
	Measured Power Pulse Mode (dBm)	Offset Value (dB) (See Section A-3)	Final Value (dBm)	Measured Power Pulse Mode (dBm)	Offset Value (dB) (See Section A-3)	Final Value (dBm)		
+26 dBm							+25 to +27	0.28
+25 dBm							+24 to +26	0.28
+24 dBm							+23 to +25	0.28
+23 dBm							+22 to +24	0.28
+22 dBm							+21 to +23	0.28
+21 dBm							+20 to +22	0.28
+20 dBm							+19 to +21	0.15
+19 dBm							+18 to +20	0.15
+18 dBm							+17 to +19	0.15
+17 dBm							+16 to +18	0.15
+16 dBm							+15 to +17	0.15
+15 dBm							+14 to +16	0.15
+14 dBm							+13 to +15	0.15
+13 dBm							+12 to +14	0.15
+12 dBm							+11 to +13	0.15
+11 dBm							+10 to +12	0.15
+10 dBm							+9 to +11	0.15
+9 dBm							+8 to +10	0.15
+8 dBm							+7 to +9	0.15
+7 dBm							+6 to +8	0.15
+6 dBm							+5 to +7	0.15
+5 dBm							+4 to +6	0.15
+4 dBm							+3 to +5	0.15

MG369xC	Firmware Revision:	Operator:
Serial Number:	Date:	Options:

Section 3-9 Power Level Log Conformity (Pulse Mode - MG3695C Only)

For MG3695C (2 of 2)
Power Sensor: For models with V connectors use N5532B-504 with N to K and V to K adapter (Anritsu P/N 34VKF50 and 34NFK50)

Set L1 [a]	Set F1 to 2.199 GHz (Option 4) or 1.999 GHz (Option 5) Only			Set F1 to 2.201 GHz (Option 4) or 2.001 GHz (All Others)			Specification (dBm)	Measurement Uncertainty (dB)
	Measured Power Pulse Mode (dBm)	Offset Value (dB) (See Section A-3)	Final Value (dBm)	Measured Power Pulse Mode (dBm)	Offset Value (dB) (See Section A-3)	Final Value (dBm)		
+3 dBm							+2 to +4	0.15
+2 dBm							+1 to +3	0.15
+1 dBm							+0 to +2	0.15
+0 dBm							–1 to +1	0.15
Calculated Offset							N/A	N/A
–1 dBm							–2 to +0	0.016
–2 dBm							–3 to –1	0.016
–3 dBm							–4 to –2	0.016
–4 dBm							–5 to –3	0.016
–5 dBm							–6 to –4	0.016

a. Start with the Maximum Leveled Output Power within instrument specification. See the technical data sheet.

MG369xC	Firmware Revision:	Operator:
Serial Number:	Date:	Options:

Section 3-9 Power Level Accuracy Test - Introduction

NOTES

The following notes are applicable to all the tables in this section.

Note A	When setting the power level, start with the Maximum Leveled Output Power within the instrument specification. See the technical data sheet.

Note B	To determine the lowest power setting: The lowest power level is determined by the Model number, options installed and test frequency. Please refer to the Technical Data Sheet for lowest tested power level. On units without option 2x (Attenuator) the minimum power is –15 dBm. If option 2x (Attenuator) is installed the lowest tested power level is 100 dB below the maximum leveled power of the unit with the appropriate options.

Note C	Accuracy with high power option (Option 15X) is ±1.5 dBm

MG369xC	Firmware Revision:	Operator:
Serial Number:	Date:	Options:

Section 3-9 Power Level Accuracy Test (10 MHz)

For MG3691C, MG3692C, MG3693C or MG3694C (1 of 26)

Power Sensor: For Models with K connectors, use power sensor N5532B-504 with N to K adapter (Anritsu P/N 34NFK50).

Set L1[a] (Note a) (Note b)	Measured Power (dBm)	Offset Value (dB) (See Section A-3)	Final Value (dBm)	Specification (Note c) (dBm)	Measurement Uncertainty (dB)
+25 dBm				+24 to +26	0.28
+20 dBm				+19 to +21	0.15
+15 dBm				+13.5 to +16.5	0.15
+10 dBm				+8.5 to +11.5	0.15
+5 dBm				+3.5 to +6.5	0.15
+0 dBm				–1.5 to +1.5	0.15
Calculated Offset		N/A	N/A	N/A	N/A
–5 dBm				–6.5 to –3.5	0.016
–10 dBm				–11.5 to –8.5	0.019
–15 dBm				–16.5 to –13.5	0.022
–20 dBm				–21.5 to –18.5	0.024
–25 dBm				–26.5 to –23.5	0.027
–30 dBm				–31.5 to –28.5	0.030
–35 dBm				–36.5 to –33.5	0.032
–40 dBm				–41.5 to –38.5	0.038
–45 dBm				–46.5 to –43.5	0.040
–50 dBm				–51.5 to –48.5	0.040
–55 dBm				–56.5 to –53.5	0.043
–60 dBm				–61.5 to –58.5	0.052
–65 dBm				–66.5 to –63.5	0.054
–70 dBm				–71.5 to –68.5	0.057
–75 dBm				–76.5 to –73.5	0.059
–80 dBm				–81.5 to –78.5	0.074
–85 dBm				–86.5 to –83.5	0.076
–90 dBm				–91.5 to –88.5	0.078
–95 dBm				–96.5 to –93.5	0.080
–100 dBm				–98.5 to –101.5	0.082

a. To ensure accurate measurements, see NOTES at the beginning of this section

MG369xC	Firmware Revision:	Operator:
Serial Number:	Date:	Options:

Section 3-9 Power Level Accuracy Test (15 MHz)

For MG3691C, MG3692C, MG3693C or MG3694C (2 of 26)

Power Sensor: For Models with K connectors, use power sensor N5532B-504 with N to K adapter (Anritsu P/N 34NFK50).

Set L1[a] (Note a) (Note b)	Measured Power (dBm)	Offset Value (dB) (See Section A-3)	Final Value (dBm)	Specification (Note c) (dBm)	Measurement Uncertainty (dB)
+25 dBm				+24 to +26	0.28
+20 dBm				+19 to +21	0.15
+15 dBm				+13.5 to +16.5	0.15
+10 dBm				+8.5 to +11.5	0.15
+5 dBm				+3.5 to +6.5	0.15
+0 dBm				–1.5 to +1.5	0.15
Calculated Offset		N/A	N/A	N/A	N/A
–5 dBm				–6.5 to –3.5	0.016
–10 dBm				–11.5 to –8.5	0.019
–15 dBm				–16.5 to –13.5	0.022
–20 dBm				–21.5 to –18.5	0.024
–25 dBm				–26.5 to –23.5	0.027
–30 dBm				–31.5 to –28.5	0.030
–35 dBm				–36.5 to –33.5	0.032
–40 dBm				–41.5 to –38.5	0.035
–45 dBm				–46.5 to –43.5	0.038
–50 dBm				–51.5 to –48.5	0.040
–55 dBm				–56.5 to –53.5	0.043
–60 dBm				–61.5 to –58.5	0.052
–65 dBm				–66.5 to –63.5	0.054
–70 dBm				–71.5 to –68.5	0.057
–75 dBm				–76.5 to –73.5	0.059
–80 dBm				–81.5 to –78.5	0.074
–85 dBm				–86.5 to –83.5	0.076
–90 dBm				–91.5 to –88.5	0.078
–95 dBm				–96.5 to –93.5	0.080
–100 dBm				–98.5 to –101.5	0.082

a. To ensure accurate measurements, see NOTES at the beginning of this section

MG369xC	Firmware Revision:	Operator:
Serial Number:	Date:	Options:

Section 3-9 Power Level Accuracy Test (60 MHz)

For MG3691C, MG3692C, MG3693C or MG3694C (3 of 26)

Power Sensor: For Models with K connectors, use power sensor N5532B-504 with N to K adapter (Anritsu P/N 34NFK50)

Set L1[a] (Note a) (Note b)	Measured Power (dBm)	Offset Value (dB) (See Section A-3)	Final Value (dBm)	Specification (Note c) (dBm)	Measurement Uncertainty (dB)
+25 dBm				+24 to +26	0.28
+20 dBm				+19 to +21	0.15
+15 dBm				+14 to +16	0.15
+10 dBm				+9 to +11	0.15
+5 dBm				+4 to +6	0.15
+0 dBm				–1 to +1	0.15
Calculated Offset		N/A	N/A	N/A	N/A
–5 dBm				–6 to –4	0.016
–10 dBm				–11 to –9	0.019
–15 dBm				–16 to –14	0.022
–20 dBm				–21 to –19	0.024
–25 dBm				–26 to –24	0.027
–30 dBm				–31 to –29	0.030
–35 dBm				–36 to –34	0.032
–40 dBm				–41 to –39	0.035
–45 dBm				–46 to –44	0.038
–50 dBm				–51 to –49	0.040
–55 dBm				–56 to –54	0.043
–60 dBm				–61 to –59	0.038
–65 dBm				–66 to –64	0.052
–70 dBm				–71 to –69	0.054
–75 dBm				–76 to –74	0.057
–80 dBm				–81 to –79	0.059
–85 dBm				–86 to –84	0.076
–90 dBm				–91 to –89	0.078
–95 dBm				–96 to –94	0.080
–100 dBm				–99 to –101	0.082

a. To ensure accurate measurements, see NOTES at the beginning of this section

MG369xC	Firmware Revision:	Operator:
Serial Number:	Date:	Options:

Section 3-9 Power Level Accuracy Test (500 MHz)

For MG3691C, MG3692C, MG3693C or MG3694C (4 of 26)

Power Sensor: For Models with K connectors, use power sensor N5532B-504 with N to K adapter (Anritsu P/N 34NFK50)

Set L1[a] (Note a) (Note b)	Measured Power (dBm)	Offset Value (dB) (See Section A-3)	Final Value (dBm)	Specification (Note c) (dBm)	Measurement Uncertainty (dB)
+25 dBm				+24 to +26	0.28
+20 dBm				+19 to +21	0.15
+15 dBm				+14 to +16	0.15
+10 dBm				+9 to +11	0.15
+5 dBm				+4 to +6	0.15
+0 dBm				–1 to +1	0.15
Calculated Offset		N/A	N/A	N/A	N/A
–5 dBm				–6 to –4	0.016
–10 dBm				–11 to –9	0.019
–15 dBm				–16 to –14	0.022
–20 dBm				–21 to –19	0.024
–25 dBm				–26 to –24	0.027
–30 dBm				–31 to –29	0.030
–35 dBm				–36 to –34	0.032
–40 dBm				–41 to –39	0.035
–45 dBm				–46 to –44	0.038
–50 dBm				–51 to –49	0.040
–55 dBm				–56 to –54	0.043
–60 dBm				–61 to –59	0.052
–65 dBm				–66 to –64	0.054
–70 dBm				–71 to –69	0.057
–75 dBm				–76 to –74	0.059
–80 dBm				–81 to –79	0.074
–85 dBm				–86 to –84	0.076
–90 dBm				–91 to –89	0.078
–95 dBm				–96 to –94	0.080
–100 dBm				–99 to –101	0.082

a. To ensure accurate measurements, see NOTES at the beginning of this section

MG369xC	Firmware Revision:	Operator:
Serial Number:	Date:	Options:

Section 3-9 Power Level Accuracy Test (600 MHz)

For MG3691C, MG3692C, MG3693C or MG3694C (5 of 26)
Power Sensor: For Models with K connectors, use power sensor N5532B-504 with N to K adapter (Anritsu P/N 34NFK50)

Set L1[(a)] (Note a) (Note b)	Measured Power (dBm)	Offset Value (dB) (See Section A-3)	Final Value (dBm)	Specification (Note c) (dBm)	Measurement Uncertainty (dB)
+25 dBm				+24 to +26	0.28
+20 dBm				+19 to +21	0.15
+15 dBm				+14 to +16	0.15
+10 dBm				+9 to +11	0.15
+5 dBm				+4 to +6	0.15
+0 dBm				–1 to +1	0.15
Calculated Offset		N/A	N/A	N/A	N/A
–5 dBm				–6 to –4	0.016
–10 dBm				–11 to –9	0.019
–15 dBm				–16 to –14	0.022
–20 dBm				–21 to –19	0.024
–25 dBm				–26 to –24	0.027
–30 dBm				–31 to –29	0.030
–35 dBm				–36 to –34	0.032
–40 dBm				–41 to –39	0.035
–45 dBm				–46 to –44	0.038
–50 dBm				–51 to –49	0.040
–55 dBm				–56 to –54	0.043
–60 dBm				–61 to –59	0.052
–65 dBm				–66 to –64	0.054
–70 dBm				–71 to –69	0.057
–75 dBm				–76 to –74	0.059
–80 dBm				–81 to –79	0.074
–85 dBm				–86 to –84	0.076
–90 dBm				–91 to –89	0.078
–95 dBm				–96 to –94	0.080
–100 dBm				–99 to –101	0.082

a. To ensure accurate measurements, see NOTES at the beginning of this section

MG369xC	Firmware Revision:	Operator:
Serial Number:	Date:	Options:

Section 3-9 Power Level Accuracy Test (1.0 GHz)

For MG3691C, MG3692C, MG3693C or MG3694C (6 of 26)
Power Sensor: For Models with K connectors, use power sensor N5532B-504 with N to K adapter (Anritsu P/N 34NFK50)

Set L1[a] (Note a) (Note b)	Measured Power (dBm)	Offset Value (dB) (See Section A-3)	Final Value (dBm)	Specification (Note c) (dBm)	Measurement Uncertainty (dB)
+25 dBm				+24 to +26	0.28
+20 dBm				+19 to +21	0.15
+15 dBm				+14 to +16	0.15
+10 dBm				+9 to +11	0.15
+5 dBm				+4 to +6	0.15
+0 dBm				–1 to +1	0.15
Calculated Offset		N/A	N/A	N/A	N/A
–5 dBm				–6 to –4	0.016
–10 dBm				–11 to –9	0.019
–15 dBm				–16 to –14	0.022
–20 dBm				–21 to –19	0.024
–25 dBm				–26 to –24	0.027
–30 dBm				–31 to –29	0.030
–35 dBm				–36 to –34	0.032
–40 dBm				–41 to –39	0.035
–45 dBm				–46 to –44	0.038
–50 dBm				–51 to –49	0.040
–55 dBm				–56 to –54	0.043
–60 dBm				–61 to –59	0.052
–65 dBm				–66 to –64	0.054
–70 dBm				–71 to –69	0.057
–75 dBm				–76 to –74	0.059
–80 dBm				–81 to –79	0.074
–85 dBm				–86 to –84	0.076
–90 dBm				–91 to –89	0.078
–95 dBm				–96 to –94	0.080
–100 dBm				–99 to –101	0.082

a. To ensure accurate measurements, see NOTES at the beginning of this section

MG369xC	Firmware Revision:	Operator:
Serial Number:	Date:	Options:

Section 3-9 Power Level Accuracy Test (2.0 GHz)

For MG3691C, MG3692C, MG3693C or MG3694C (7 of 26)

Power Sensor: For Models with K connectors, use power sensor N5532B-504 with N to K adapter (Anritsu P/N 34NFK50)

Set L1[a] (Note a) (Note b)	Measured Power (dBm)	Offset Value (dB) (See Section A-3)	Final Value (dBm)	Specification (Note c) (dBm)	Measurement Uncertainty (dB)
+25 dBm				+24 to +26	0.28
+20 dBm				+19 to +21	0.15
+15 dBm				+14 to +16	0.15
+10 dBm				+9 to +11	0.15
+5 dBm				+4 to +6	0.15
+0 dBm				–1 to +1	0.15
Calculated Offset		N/A	N/A	N/A	N/A
–5 dBm				–6 to –4	0.016
–10 dBm				–11 to –9	0.019
–15 dBm				–16 to –14	0.022
–20 dBm				–21 to –19	0.024
–25 dBm				–26 to –24	0.027
–30 dBm				–31 to –29	0.030
–35 dBm				–36 to –34	0.032
–40 dBm				–41 to –39	0.035
–45 dBm				–46 to –44	0.038
–50 dBm				–51 to –49	0.040
–55 dBm				–56 to –54	0.043
–60 dBm				–61 to –59	0.052
–65 dBm				–66 to –64	0.054
–70 dBm				–71 to –69	0.057
–75 dBm				–76 to –74	0.059
–80 dBm				–81 to –79	0.074
–85 dBm				–86 to –84	0.076
–90 dBm				–91 to –89	0.078
–95 dBm				–96 to –94	0.080
–100 dBm				–99 to –101	0.082

a. To ensure accurate measurements, see NOTES at the beginning of this section

MG369xC	Firmware Revision:	Operator:
Serial Number:	Date:	Options:

Section 3-9 Power Level Accuracy Test (4.0 GHz)

For MG3691C, MG3692C, MG3693C or MG3694C (8 of 26)

Power Sensor: For Models with K connectors, use power sensor N5532B-504 with N to K adapter (Anritsu P/N 34NFK50)

Set L1[a] (Note a) (Note b)	Measured Power (dBm)	Offset Value (dB) (See Section A-3)	Final Value (dBm)	Specification (Note c) (dBm)	Measurement Uncertainty (dB)
+25 dBm				+24 to +26	.28
+20 dBm				+19 to +21	.15
+15 dBm				+14 to +16	.15
+10 dBm				+9 to +11	.15
+5 dBm				+4 to +6	.15
+0 dBm				–1 to +1	.15
Calculated Offset		N/A	N/A	N/A	N/A
–5 dBm				–6 to –4	0.016
–10 dBm				–11 to –9	0.019
–15 dBm				–16 to –14	0.022
–20 dBm				–21 to –19	0.024
–25 dBm				–26 to –24	0.027
–30 dBm				–31 to –29	0.030
–35 dBm				–36 to –34	0.032
–40 dBm				–41 to –39	0.035
–45 dBm				–46 to –44	0.038
–50 dBm				–51 to –49	0.040
–55 dBm				–56 to –54	0.043
–60 dBm				–61 to –59	0.052
–65 dBm				–66 to –64	0.054
–70 dBm				–71 to –69	0.057
–75 dBm				–76 to –74	0.059
–80 dBm				–81 to –79	0.074
–85 dBm				–86 to –84	0.076
–90 dBm				–91 to –89	0.078
–95 dBm				–96 to –94	0.080
–100 dBm				–99 to –101	0.082

a. To ensure accurate measurements, see NOTES at the beginning of this section

MG369xC	Firmware Revision:	Operator:
Serial Number:	Date:	Options:

Section 3-9 Power Level Accuracy Test (6.0 GHz)

For MG3691C, MG3692C, MG3693C or MG3694C (9 of 26)

Power Sensor: For Models with K connectors, use power sensor N5532B-550 with 2.4mm to 2.92 mm (K) adapter (P/N 11904D)

Set L1[a] (Note a) (Note b)	Measured Power (dBm)	Offset Value (dB) (See Section A-3)	Final Value (dBm)	Specification (Note c) (dBm)	Measurement Uncertainty (dB)
+25 dBm				+24 to +26	0.29
+20 dBm				+19 to +21	0.17
+15 dBm				+14 to +16	0.17
+10 dBm				+9 to +11	0.17
+5 dBm				+4 to +6	0.17
+0 dBm				–1 to +1	0.17
Calculated Offset		N/A	N/A	N/A	N/A
–5 dBm				–6 to –4	0.016
–10 dBm				–11 to –9	0.019
–15 dBm				–16 to –14	0.022
–20 dBm				–21 to –19	0.024
–25 dBm				–26 to –24	0.027
–30 dBm				–31 to –29	0.030
–35 dBm				–36 to –34	0.032
–40 dBm				–41 to –39	0.035
–45 dBm				–46 to –44	0.038
–50 dBm				–51 to –49	0.040
–55 dBm				–56 to –54	0.043
–60 dBm				–61 to –59	0.052
–65 dBm				–66 to –64	0.054
–70 dBm				–71 to –69	0.057
–75 dBm				–76 to –74	0.059
–80 dBm				–81 to –79	0.074
–85 dBm				–86 to –84	0.076
–90 dBm				–91 to –89	0.078
–95 dBm				–96 to –94	0.080
–100 dBm				–99 to –101	0.082

a. To ensure accurate measurements, see NOTES at the beginning of this section

MG369xC	Firmware Revision:	Operator:
Serial Number:	Date:	Options:

Section 3-9 Power Level Accuracy Test (8.0 GHz)

For MG3691C, MG3692C, MG3693C or MG3694C (10 of 26)

Power Sensor: For Models with K connectors, use power sensor N5532B-550 with 2.4 mm to 2.92 mm (K) adapter (P/N 11904D).

Set L1[a] (Note a) (Note b)	Measured Power (dBm)	Offset Value (dB) (See Section A-3)	Final Value (dBm)	Specification (Note c) (dBm)	Measurement Uncertainty (dB)
+25 dBm				+24 to +26	0.29
+20 dBm				+19 to +21	0.17
+15 dBm				+14 to +16	0.17
+10 dBm				+9 to +11	0.17
+5 dBm				+4 to +6	0.17
+0 dBm				–1 to +1	0.17
Calculated Offset		N/A	N/A	N/A	N/A
–5 dBm				–6 to –4	0.016
–10 dBm				–11 to –9	0.019
–15 dBm				–16 to –14	0.022
–20 dBm				–21 to –19	0.024
–25 dBm				–26 to –24	0.027
–30 dBm				–31 to –29	0.030
–35 dBm				–36 to –34	0.032
–40 dBm				–41 to –39	0.035
–45 dBm				–46 to –44	0.038
–50 dBm				–51 to –49	0.040
–55 dBm				–56 to –54	0.043
–60 dBm				–61 to –59	0.052
–65 dBm				–66 to –64	0.054
–70 dBm				–71 to –69	0.057
–75 dBm				–76 to –74	0.059
–80 dBm				–81 to –79	0.074
–85 dBm				–86 to –84	0.076
–90 dBm				–91 to –89	0.078
–95 dBm				–96 to –94	0.080
–100 dBm				–99 to –101	0.082

a. To ensure accurate measurements, see NOTES at the beginning of this section

MG369xC	Firmware Revision:	Operator:
Serial Number:	Date:	Options:

Section 3-9 Power Level Accuracy Test (10.0 GHz)

For MG3691C, MG3692C, MG3693C or MG3694C (11 of 26)

Power Sensor: For Models with K connectors, use power sensor N5532B-550 with 2.4 mm to 2.92 mm (K) adapter (P/N 11904D).

Set L1[a] (Note a) (Note b)	Measured Power (dBm)	Offset Value (dB) (See Section A-3)	Final Value (dBm)	Specification (Note c) (dBm)	Measurement Uncertainty (dB)
+25 dBm				+24 to +26	0.29
+20 dBm				+19 to +21	0.17
+15 dBm				+14 to +16	0.17
+10 dBm				+9 to +11	0.17
+5 dBm				+4 to +6	0.17
+0 dBm				–1 to +1	0.17
Calculated Offset		N/A	N/A	N/A	N/A
–5 dBm				–6 to –4	0.016
–10 dBm				–11 to –9	0.019
–15 dBm				–16 to –14	0.022
–20 dBm				–21 to –19	0.024
–25 dBm				–26 to –24	0.027
–30 dBm				–31 to –29	0.030
–35 dBm				–36 to –34	0.032
–40 dBm				–41 to –39	0.035
–45 dBm				–46 to –44	0.038
–50 dBm				–51 to –49	0.040
–55 dBm				–56 to –54	0.043
–60 dBm				–61 to –59	0.052
–65 dBm				–66 to –64	0.054
–70 dBm				–71 to –69	0.057
–75 dBm				–76 to –74	0.059
–80 dBm				–81 to –79	0.074
–85 dBm				–86 to –84	0.076
–90 dBm				–91 to –89	0.078
–95 dBm				–96 to –94	0.080
–100 dBm				–99 to –101	0.082

a. To ensure accurate measurements, see NOTES at the beginning of this section

MG369xC	Firmware Revision:	Operator:
Serial Number:	Date:	Options:

Section 3-9 Power Level Accuracy Test (12.0 GHz)

For MG3691C, MG3692C, MG3693C or MG3694C (12 of 26)

Power Sensor: For Models with K connectors, use power sensor N5532B-550 with 2.4 mm to 2.92 mm (K) adapter (P/N 11904D).

Set L1[a] (Note a) (Note b)	Measured Power (dBm)	Offset Value (dB) (See Section A-3)	Final Value (dBm)	Specification (Note c) (dBm)	Measurement Uncertainty (dB)
+25 dBm				+24 to +26	0.29
+20 dBm				+19 to +21	0.17
+15 dBm				+14 to +16	0.17
+10 dBm				+9 to +11	0.17
+5 dBm				+4 to +6	0.17
+0 dBm				–1 to +1	0.17
Calculated Offset		N/A	N/A	N/A	N/A
–5 dBm				–6 to –4	0.016
–10 dBm				–11 to –9	0.019
–15 dBm				–16 to –14	0.022
–20 dBm				–21 to –19	0.024
–25 dBm				–26 to –24	0.027
–30 dBm				–31 to –29	0.030
–35 dBm				–36 to –34	0.032
–40 dBm				–41 to –39	0.035
–45 dBm				–46 to –44	0.038
–50 dBm				–51 to –49	0.040
–55 dBm				–56 to –54	0.043
–60 dBm				–61 to –59	0.052
–65 dBm				–66 to –64	0.054
–70 dBm				–71 to –69	0.057
–75 dBm				–76 to –74	0.059
–80 dBm				–81 to –79	0.074
–85 dBm				–86 to –84	0.076
–90 dBm				–91 to –89	0.078
–95 dBm				–96 to –94	0.080
–100 dBm				–99 to –101	0.082

a. To ensure accurate measurements, see NOTES at the beginning of this section

MG369xC	Firmware Revision:	Operator:
Serial Number:	Date:	Options:

Section 3-9 Power Level Accuracy Test (14.0 GHz)

For MG3691C, MG3692C, MG3693C or MG3694C (13 of 26)

Power Sensor: For Models with K connectors, use power sensor N5532B-550 with 2.4 mm to 2.92 mm (K) adapter (P/N 11904D).

Set L1[a] (Note a) (Note b)	Measured Power (dBm)	Offset Value (dB) (See Section A-3)	Final Value (dBm)	Specification (Note c) (dBm)	Measurement Uncertainty (dB)
+25 dBm				+24 to +26	0.29
+20 dBm				+19 to +21	0.17
+15 dBm				+14 to +16	0.17
+10 dBm				+9 to +11	0.17
+5 dBm				+4 to +6	0.17
+0 dBm				–1 to +1	0.17
Calculated Offset		N/A	N/A	N/A	N/A
–5 dBm				–6 to –4	0.016
–10 dBm				–11 to –9	0.019
–15 dBm				–16 to –14	0.022
–20 dBm				–21 to –19	0.024
–25 dBm				–26 to –24	0.027
–30 dBm				–31 to –29	0.030
–35 dBm				–36 to –34	0.032
–40 dBm				–41 to –39	0.035
–45 dBm				–46 to –44	0.038
–50 dBm				–51 to –49	0.040
–55 dBm				–56 to –54	0.043
–60 dBm				–61 to –59	0.052
–65 dBm				–66 to –64	0.054
–70 dBm				–71 to –69	0.057
–75 dBm				–76 to –74	0.059
–80 dBm				–81 to –79	0.074
–85 dBm				–86 to –84	0.076
–90 dBm				–91 to –89	0.078
–95 dBm				–96 to –94	0.080
–100 dBm				–99 to –101	0.084

a. To ensure accurate measurements, see NOTES at the beginning of this section

MG369xC	Firmware Revision:	Operator:
Serial Number:	Date:	Options:

Section 3-9 Power Level Accuracy Test (16.0 GHz)

For MG3691C, MG3692C, MG3693C or MG3694C (14 of 26)

Power Sensor: For Models with K connectors, use power sensor N5532B-550 with 2.4 mm to 2.92 mm (K) adapter (P/N 11904D).

Set L1[(a)] (Note a) (Note b)	Measured Power (dBm)	Offset Value (dB) (See Section A-3)	Final Value (dBm)	Specification (Note c) (dBm)	Measurement Uncertainty (dB)
+25 dBm				+24 to +26	0.29
+20 dBm				+19 to +21	0.17
+15 dBm				+14 to +16	0.17
+10 dBm				+9 to +11	0.17
+5 dBm				+4 to +6	0.17
+0 dBm				–1 to +1	0.17
Calculated Offset		N/A	N/A	N/A	N/A
–5 dBm				–6 to –4	0.016
–10 dBm				–11 to –9	0.019
–15 dBm				–16 to –14	0.022
–20 dBm				–21 to –19	0.024
–25 dBm				–26 to –24	0.027
–30 dBm				–31 to –29	0.030
–35 dBm				–36 to –34	0.032
–40 dBm				–41 to –39	0.035
–45 dBm				–46 to –44	0.038
–50 dBm				–51 to –49	0.040
–55 dBm				–56 to –54	0.043
–60 dBm				–61 to –59	0.052
–65 dBm				–66 to –64	0.054
–70 dBm				–71 to –69	0.057
–75 dBm				–76 to –74	0.059
–80 dBm				–81 to –79	0.074
–85 dBm				–86 to –84	0.076
–90 dBm				–91 to –89	0.078
–95 dBm				–96 to –94	0.080
–100 dBm				–99 to –101	0.084

a. To ensure accurate measurements, see NOTES at the beginning of this section

MG369xC	Firmware Revision:	Operator:
Serial Number:	Date:	Options:

Section 3-9 Power Level Accuracy Test (18.0 GHz)

For MG3691C, MG3692C, MG3693C or MG3694C (15 of 26)

Power Sensor: For Models with K connectors, use power sensor N5532B-550 with 2.4 mm to 2.92 mm (K) adapter (P/N 11904D).

Set L1[a] (Note a) (Note b)	Measured Power (dBm)	Offset Value (dB) (See Section A-3)	Final Value (dBm)	Specification (Note c) (dBm)	Measurement Uncertainty (dB)
+25 dBm				+24 to +26	0.29
+20 dBm				+19 to +21	0.17
+15 dBm				+14 to +16	0.17
+10 dBm				+9 to +11	0.17
+5 dBm				+4 to +6	0.17
+0 dBm				–1 to +1	0.17
Calculated Offset		N/A	N/A	N/A	N/A
–5 dBm				–6 to –4	0.016
–10 dBm				–11 to –9	0.019
–15 dBm				–16 to –14	0.022
–20 dBm				–21 to –19	0.024
–25 dBm				–26 to –24	0.027
–30 dBm				–31 to –29	0.030
–35 dBm				–36 to –34	0.032
–40 dBm				–41 to –39	0.035
–45 dBm				–46 to –44	0.038
–50 dBm				–51 to –49	0.040
–55 dBm				–56 to –54	0.043
–60 dBm				–61 to –59	0.052
–65 dBm				–66 to –64	0.054
–70 dBm				–71 to –69	0.057
–75 dBm				–76 to –74	0.059
–80 dBm				–81 to –79	0.074
–85 dBm				–86 to –84	0.076
–90 dBm				–91 to –89	0.078
–95 dBm				–96 to –94	0.080
–100 dBm				–99 to –101	0.084

a. To ensure accurate measurements, see NOTES at the beginning of this section

MG369xC	Firmware Revision:	Operator:
Serial Number:	Date:	Options:

Section 3-9 Power Level Accuracy Test (20.0 GHz)

For MG3691C, MG3692C, MG3693C or MG3694C (16 of 26)

Power Sensor: For Models with K connectors, use power sensor N5532B-550 with 2.4 mm to 2.92 mm (K) adapter (P/N 11904D).

Set L1[(a)] (Note a) (Note b)	Measured Power (dBm)	Offset Value (dB) (See Section A-3)	Final Value (dBm)	Specification (Note c) (dBm)	Measurement Uncertainty (dB)
+25 dBm				+24 to +26	0.31
+20 dBm				+19 to +21	0.20
+15 dBm				+14 to +16	0.20
+10 dBm				+9 to +11	0.20
+5 dBm				+4 to +6	0.20
+0 dBm				–1 to +1	0.20
Calculated Offset		N/A	N/A	N/A	N/A
–5 dBm				–6 to –4	0.016
–10 dBm				–11 to –9	0.019
–15 dBm				–16 to –14	0.022
–20 dBm				–21 to –19	0.024
–25 dBm				–26 to –24	0.027
–30 dBm				–31 to –29	0.030
–35 dBm				–36 to –34	0.032
–40 dBm				–41 to –39	0.035
–45 dBm				–46 to –44	0.038
–50 dBm				–51 to –49	0.040
–55 dBm				–56 to –54	0.043
–60 dBm				–61 to –59	0.052
–65 dBm				–66 to –64	0.054
–70 dBm				–71 to –69	0.057
–75 dBm				–76 to –74	0.059
–80 dBm				–81 to –79	0.074
–85 dBm				–86 to –84	0.076
–90 dBm				–91 to –89	0.087
–95 dBm				–96 to –94	0.136
–100 dBm				–99 to –101	0.229

a. To ensure accurate measurements, see NOTES at the beginning of this section

MG369xC	Firmware Revision:	Operator:
Serial Number:	Date:	Options:

Section 3-9 Power Level Accuracy Test (22.0 GHz)

For MG3691C, MG3692C, MG3693C or MG3694C (17 of 26)

Power Sensor: For Models with K connectors, use power sensor N5532B-550 with 2.4 mm to 2.92 mm (K) adapter (P/N 11904D).

Set L1[a] (Note a) (Note b)	Measured Power (dBm)	Offset Value (dB) (See Section A-3)	Final Value (dBm)	Specification (Note c) (dBm)	Measurement Uncertainty (dB)
+25 dBm				+24 to +26	0.31
+20 dBm				+19 to +21	0.20
+15 dBm				+14 to +16	0.20
+10 dBm				+9 to +11	0.20
+5 dBm				+4 to +6	0.20
+0 dBm				–1 to +1	0.20
Calculated Offset		N/A	N/A	N/A	N/A
–5 dBm				–6 to –4	0.016
–10 dBm				–11 to –9	0.019
–15 dBm				–16 to –14	0.022
–20 dBm				–21 to –19	0.024
–25 dBm				–26 to –24	0.027
–30 dBm				–31 to –29	0.030
–35 dBm				–36 to –34	0.032
–40 dBm				–41 to –39	0.035
–45 dBm				–46 to –44	0.038
–50 dBm				–51 to –49	0.040
–55 dBm				–56 to –54	0.043
–60 dBm				–61 to –59	0.052
–65 dBm				–66 to –64	0.054
–70 dBm				–71 to –69	0.057
–75 dBm				–76 to –74	0.059
–80 dBm				–81 to –79	0.074
–85 dBm				–86 to –84	0.076
–90 dBm				–91 to –89	0.087
–95 dBm				–96 to –94	0.136
–100 dBm				–99 to –101	0.229

a. To ensure accurate measurements, see NOTES at the beginning of this section

MG369xC	Firmware Revision:	Operator:
Serial Number:	Date:	Options:

Section 3-9 Power Level Accuracy Test (24.0 GHz)

For MG3691C, MG3692C, MG3693C or MG3694C (18 of 26)

Power Sensor: For Models with K connectors, use power sensor N5532B-550 with 2.4 mm to 2.92 mm (K) adapter (P/N 11904D).

Set L1[(a)] (Note a) (Note b)	Measured Power (dBm)	Offset Value (dB) (See Section A-3)	Final Value (dBm)	Specification (Note c) (dBm)	Measurement Uncertainty (dB)
+25 dBm				+24 to +26	0.31
+20 dBm				+19 to +21	0.20
+15 dBm				+14 to +16	0.20
+10 dBm				+9 to +11	0.20
+5 dBm				+4 to +6	0.20
+0 dBm				–1 to +1	0.20
Calculated Offset		N/A	N/A	N/A	N/A
–5 dBm				–6 to –4	0.016
–10 dBm				–11 to –9	0.019
–15 dBm				–16 to –14	0.022
–20 dBm				–21 to –19	0.024
–25 dBm				–26 to –24	0.027
–30 dBm				–31 to –29	0.030
–35 dBm				–36 to –34	0.032
–40 dBm				–41 to –39	0.035
–45 dBm				–46 to –44	0.038
–50 dBm				–51 to –49	0.040
–55 dBm				–56 to –54	0.043
–60 dBm				–61 to –59	0.052
–65 dBm				–66 to –64	0.054
–70 dBm				–71 to –69	0.057
–75 dBm				–76 to –74	0.059
–80 dBm				–81 to –79	0.074
–85 dBm				–86 to –84	0.076
–90 dBm				–91 to –89	0.087
–95 dBm				–96 to –94	0.136
–100 dBm				–99 to –101	0.229

a. To ensure accurate measurements, see NOTES at the beginning of this section

MG369xC	Firmware Revision:	Operator:
Serial Number:	Date:	Options:

Section 3-9 Power Level Accuracy Test (26.0 GHz)

For MG3691C, MG3692C, MG3693C or MG3694C (19 of 26)

Power Sensor: For Models with K connectors, use power sensor N5532B-550 with 2.4 mm to 2.92 mm (K) adapter (P/N 11904D).

Set L1[a] (Note a) (Note b)	Measured Power (dBm)	Offset Value (dB) (See Section A-3)	Final Value (dBm)	Specification (Note c) (dBm)	Measurement Uncertainty (dB)
+25 dBm				+24 to +26	0.31
+20 dBm				+19 to +21	0.20
+15 dBm				+14 to +16	0.20
+10 dBm				+9 to +11	0.20
+5 dBm				+4 to +6	0.20
+0 dBm				–1 to +1	0.20
Calculated Offset		N/A	N/A	N/A	N/A
–5 dBm				–6 to –4	0.016
–10 dBm				–11 to –9	0.019
–15 dBm				–16 to –14	0.022
–20 dBm				–21 to –19	0.024
–25 dBm				–26 to –24	0.027
–30 dBm				–31 to –29	0.030
–35 dBm				–36 to –34	0.032
–40 dBm				–41 to –39	0.035
–45 dBm				–46 to –44	0.038
–50 dBm				–51 to –49	0.040
–55 dBm				–56 to –54	0.043
–60 dBm				–61 to –59	0.052
–65 dBm				–66 to –64	0.054
–70 dBm				–71 to –69	0.057
–75 dBm				–76 to –74	0.059
–80 dBm				–81 to –79	0.074
–85 dBm				–86 to –84	0.076
–90 dBm				–91 to –89	0.087
–95 dBm				–96 to –94	0.136
–100 dBm				–99 to –101	0.229

a. To ensure accurate measurements, see NOTES at the beginning of this section

MG369xC	Firmware Revision:	Operator:
Serial Number:	Date:	Options:

Section 3-9 Power Level Accuracy Test (28.0 GHz)

For MG3691C, MG3692C, MG3693C or MG3694C (20 of 26)

Power Sensor: For Models with K connectors, use power sensor N5532B-550 with 2.4 mm to 2.92 mm (K) adapter (P/N 11904D).

Set L1[(a)] (Note a) (Note b)	Measured Power (dBm)	Offset Value (dB) (See Section A-3)	Final Value (dBm)	Specification (Note c) (dBm)	Measurement Uncertainty (dB)
+25 dBm				+24 to +26	0.33
+20 dBm				+19 to +21	0.20
+15 dBm				+14 to +16	0.20
+10 dBm				+9 to +11	0.20
+5 dBm				+4 to +6	0.20
+0 dBm				–1 to +1	0.20
Calculated Offset		N/A	N/A	N/A	N/A
–5 dBm				–6 to –4	0.016
–10 dBm				–11 to –9	0.019
–15 dBm				–16 to –14	0.022
–20 dBm				–21 to –19	0.024
–25 dBm				–26 to –24	0.027
–30 dBm				–31 to –29	0.030
–35 dBm				–36 to –34	0.032
–40 dBm				–41 to –39	0.035
–45 dBm				–46 to –44	0.038
–50 dBm				–51 to –49	0.040
–55 dBm				–56 to –54	0.043
–60 dBm				–61 to –59	0.052
–65 dBm				–66 to –64	0.054
–70 dBm				–71 to –69	0.057
–75 dBm				–76 to –74	0.059
–80 dBm				–81 to –79	0.074
–85 dBm				–86 to –84	0.076
–90 dBm				–91 to –89	0.087
–95 dBm				–96 to –94	0.136
–100 dBm				–99 to –101	0.229

a. To ensure accurate measurements, see NOTES at the beginning of this section

MG369xC	Firmware Revision:	Operator:
Serial Number:	Date:	Options:

Section 3-9 Power Level Accuracy Test (30.0 GHz)

For MG3691C, MG3692C, MG3693C or MG3694C (21 of 26)

Power Sensor: For Models with K connectors, use power sensor N5532B-550 with 2.4 mm to 2.92 mm (K) adapter (P/N 11904D).

Set L1[a] (Note a) (Note b)	Measured Power (dBm)	Offset Value (dB) (See Section A-3)	Final Value (dBm)	Specification (Note c) (dBm)	Measurement Uncertainty (dB)
+25 dBm				+24 to +26	0.33
+20 dBm				+19 to +21	0.20
+15 dBm				+14 to +16	0.20
+10 dBm				+9 to +11	0.20
+5 dBm				+4 to +6	0.20
+0 dBm				–1 to +1	0.20
Calculated Offset		N/A	N/A	N/A	N/A
–5 dBm				–6 to –4	0.016
–10 dBm				–11 to –9	0.019
–15 dBm				–16 to –14	0.022
–20 dBm				–21 to –19	0.024
–25 dBm				–26 to –24	0.027
–30 dBm				–31 to –29	0.030
–35 dBm				–36 to –34	0.032
–40 dBm				–41 to –39	0.035
–45 dBm				–46 to –44	0.038
–50 dBm				–51 to –49	0.040
–55 dBm				–56 to –54	0.043
–60 dBm				–61 to –59	0.052
–65 dBm				–66 to –64	0.054
–70 dBm				–71 to –69	0.057
–75 dBm				–76 to –74	0.059
–80 dBm				–81 to –79	0.074
–85 dBm				–86 to –84	0.076
–90 dBm				–91 to –89	0.083
–95 dBm				–96 to –94	0.123
–100 dBm				–99 to –101	0.208

a. To ensure accurate measurements, see NOTES at the beginning of this section

MG369xC	Firmware Revision:	Operator:
Serial Number:	Date:	Options:

Section 3-9 Power Level Accuracy Test (32.0 GHz)

For MG3691C, MG3692C, MG3693C or MG3694C (22 of 26)

Power Sensor: For Models with K connectors, use power sensor N5532B-550 with 2.4 mm to 2.92 mm (K) adapter (P/N 11904D).

Set L1[(a)] (Note a) (Note b)	Measured Power (dBm)	Offset Value (dB) (See Section A-3)	Final Value (dBm)	Specification (Note c) (dBm)	Measurement Uncertainty (dB)
+25 dBm				+24 to +26	0.34
+20 dBm				+19 to +21	0.22
+15 dBm				+14 to +16	0.22
+10 dBm				+9 to +11	0.22
+5 dBm				+4 to +6	0.22
+0 dBm				–1 to +1	0.22
Calculated Offset		N/A	N/A	N/A	N/A
–5 dBm				–6 to –4	0.016
–10 dBm				–11 to –9	0.019
–15 dBm				–16 to –14	0.022
–20 dBm				–21 to –19	0.024
–25 dBm				–26 to –24	0.027
–30 dBm				–31 to –29	0.030
–35 dBm				–36 to –34	0.032
–40 dBm				–41 to –39	0.035
–45 dBm				–46 to –44	0.038
–50 dBm				–51 to –49	0.040
–55 dBm				–56 to –54	0.043
–60 dBm				–61 to –59	0.052
–65 dBm				–66 to –64	0.054
–70 dBm				–71 to –69	0.057
–75 dBm				–76 to –74	0.059
–80 dBm				–81 to –79	0.083
–85 dBm				–86 to –84	0.132
–90 dBm				–91 to –89	0.225
–95 dBm				–96 to –94	0.355
–100 dBm				–99 to –101	0.513

a. To ensure accurate measurements, see NOTES at the beginning of this section

MG369xC	Firmware Revision:	Operator:
Serial Number:	Date:	Options:

Section 3-9 Power Level Accuracy Test (34.0 GHz)

For MG3691C, MG3692C, MG3693C or MG3694C (23 of 26)

Power Sensor: For Models with K connectors, use power sensor N5532B-550 with 2.4 mm to 2.92 mm (K) adapter (P/N 11904D).

Set L1[a] (Note a) (Note b)	Measured Power (dBm)	Offset Value (dB) (See Section A-3)	Final Value (dBm)	Specification (Note c) (dBm)	Measurement Uncertainty (dB)
+25 dBm				+24 to +26	0.34
+20 dBm				+19 to +21	0.22
+15 dBm				+14 to +16	0.22
+10 dBm				+9 to +11	0.22
+5 dBm				+4 to +6	0.22
+0 dBm				–1 to +1	0.22
Calculated Offset		N/A	N/A	N/A	N/A
–5 dBm				–6 to –4	0.016
–10 dBm				–11 to –9	0.019
–15 dBm				–16 to –14	0.022
–20 dBm				–21 to –19	0.024
–25 dBm				–26 to –24	0.027
–30 dBm				–31 to –29	0.030
–35 dBm				–36 to –34	0.032
–40 dBm				–41 to –39	0.035
–45 dBm				–46 to –44	0.038
–50 dBm				–51 to –49	0.040
–55 dBm				–56 to –54	0.043
–60 dBm				–61 to –59	0.052
–65 dBm				–66 to –64	0.054
–70 dBm				–71 to –69	0.057
–75 dBm				–76 to –74	0.059
–80 dBm				–81 to –79	0.083
–85 dBm				–86 to –84	0.132
–90 dBm				–91 to –89	0.225
–95 dBm				–96 to –94	0.355
–100 dBm				–99 to –101	0.513

a. To ensure accurate measurements, see NOTES at the beginning of this section

MG369xC	Firmware Revision:	Operator:
Serial Number:	Date:	Options:

Section 3-9 Power Level Accuracy Test (36.0 GHz)

For MG3691C, MG3692C, MG3693C or MG3694C (24 of 26)

Power Sensor: For Models with K connectors, use power sensor N5532B-550 with 2.4 mm to 2.92 mm (K) adapter (P/N 11904D).

Set L1[(a)] (Note a) (Note b)	Measured Power (dBm)	Offset Value (dB) (See Section A-3)	Final Value (dBm)	Specification (Note c) (dBm)	Measurement Uncertainty (dB)
+25 dBm				+24 to +26	0.34
+20 dBm				+19 to +21	0.22
+15 dBm				+14 to +16	0.22
+10 dBm				+9 to +11	0.22
+5 dBm				+4 to +6	0.22
+0 dBm				–1 to +1	0.22
Calculated Offset		N/A	N/A	N/A	N/A
–5 dBm				–6 to –4	0.016
–10 dBm				–11 to –9	0.019
–15 dBm				–16 to –14	0.022
–20 dBm				–21 to –19	0.024
–25 dBm				–26 to –24	0.027
–30 dBm				–31 to –29	0.030
–35 dBm				–36 to –34	0.032
–40 dBm				–41 to –39	0.035
–45 dBm				–46 to –44	0.038
–50 dBm				–51 to –49	0.040
–55 dBm				–56 to –54	0.043
–60 dBm				–61 to –59	0.052
–65 dBm				–66 to –64	0.054
–70 dBm				–71 to –69	0.057
–75 dBm				–76 to –74	0.059
–80 dBm				–81 to –79	0.083
–85 dBm				–86 to –84	0.132
–90 dBm				–91 to –89	0.225
–95 dBm				–96 to –94	0.355
–100 dBm				–99 to –101	0.513

a. To ensure accurate measurements, see NOTES at the beginning of this section

MG369xC	Firmware Revision:	Operator:
Serial Number:	Date:	Options:

Section 3-9 Power Level Accuracy Test (38.0 GHz)

For MG3691C, MG3692C, MG3693C or MG3694C (25 of 26)

Power Sensor: For Models with K connectors, use power sensor N5532B-550 with 2.4 mm to 2.92 mm (K) adapter (P/N 11904D).

Set L1[a] (Note a) (Note b)	Measured Power (dBm)	Offset Value (dB) (See Section A-3)	Final Value (dBm)	Specification (Note c) (dBm)	Measurement Uncertainty (dB)
+25 dBm				+24 to +26	0.34
+20 dBm				+19 to +21	0.22
+15 dBm				+14 to +16	0.22
+10 dBm				+9 to +11	0.22
+5 dBm				+4 to +6	0.22
+0 dBm				–1 to +1	0.22
Calculated Offset		N/A	N/A	N/A	N/A
–5 dBm				–6 to –4	0.016
–10 dBm				–11 to –9	0.019
–15 dBm				–16 to –14	0.022
–20 dBm				–21 to –19	0.024
–25 dBm				–26 to –24	0.027
–30 dBm				–31 to –29	0.030
–35 dBm				–36 to –34	0.032
–40 dBm				–41 to –39	0.035
–45 dBm				–46 to –44	0.038
–50 dBm				–51 to –49	0.040
–55 dBm				–56 to –54	0.043
–60 dBm				–61 to –59	0.052
–65 dBm				–66 to –64	0.054
–70 dBm				–71 to –69	0.057
–75 dBm				–76 to –74	0.059
–80 dBm				–81 to –79	0.083
–85 dBm				–86 to –84	0.132
–90 dBm				–91 to –89	0.225
–95 dBm				–96 to –94	0.355
–100 dBm				–99 to –101	0.513

a. To ensure accurate measurements, see NOTES at the beginning of this section

MG369xC	Firmware Revision:	Operator:
Serial Number:	Date:	Options:

Section 3-9 Power Level Accuracy Test (40.0 GHz)

For MG3691C, MG3692C, MG3693C or MG3694C (26 of 26)

Power Sensor: For Models with K connectors, use power sensor N5532B-550 with 2.4 mm to 2.92 mm (K) adapter (P/N 11904D).

Set L1[a] (Note a) (Note b)	Measured Power (dBm)	Offset Value (dB) (See Section A-3)	Final Value (dBm)	Specification (Note c) (dBm)	Measurement Uncertainty (dB)
+25 dBm				+24 to +26	0.34
+20 dBm				+19 to +21	0.22
+15 dBm				+14 to +16	0.22
+10 dBm				+9 to +11	0.22
+5 dBm				+4 to +6	0.22
+0 dBm				–1 to +1	0.22
Calculated Offset		N/A	N/A	N/A	N/A
–5 dBm				–6 to –4	0.016
–10 dBm				–11 to –9	0.019
–15 dBm				–16 to –14	0.022
–20 dBm				–21 to –19	0.024
–25 dBm				–26 to –24	0.027
–30 dBm				–31 to –29	0.030
–35 dBm				–36 to –34	0.032
–40 dBm				–41 to –39	0.035
–45 dBm				–46 to –44	0.038
–50 dBm				–51 to –49	0.040
–55 dBm				–56 to –54	0.043
–60 dBm				–61 to –59	0.052
–65 dBm				–66 to –64	0.054
–70 dBm				–71 to –69	0.057
–75 dBm				–76 to –74	0.059
–80 dBm				–81 to –79	0.083
–85 dBm				–86 to –84	0.132
–90 dBm				–91 to –89	0.225
–95 dBm				–96 to –94	0.355
–100 dBm				–99 to –101	0.513

a. To ensure accurate measurements, see NOTES at the beginning of this section

MG369xC	Firmware Revision:	Operator:
Serial Number:	Date:	Options:

Section 3-9 Power Level Accuracy Test - MG3695C Only - Introduction

NOTES

The following notes are applicable to all the tables in this section.

Note A	When setting the power level, start with the Maximum Leveled Output Power within the instrument specification. See the technical data sheet.

Note B	To determine the lowest power setting: The lowest power level is determined by the Model number, options installed and test frequency. Please refer to the Technical Data Sheet for lowest tested power level. On units without option 2x (Attenuator) the minimum power is –15 dBm. If option 2x (Attenuator) is installed the lowest tested power level is 100 dB below the maximum leveled power of the unit with the appropriate options.

Note C	Accuracy with high power option (Option 15X) is ±1.5 dBm

MG369xC	Firmware Revision:	Operator:
Serial Number:	Date:	Options:

Section 3-9 Power Level Accuracy Test - MG3695C Only (10 MHz)

Power Sensor: For models with V connectors, use power sensor N5532B-504 with N to K and V to K adapter (Anritsu P/N 34VKF50 and 34NFK50). (1 of 27)

Set L1[a] (Note a) (Note b)	Measured Power (dBm)	Offset Value (dB) (See Section A-3)	Final Value (dBm)	Specification (Note c) (dBm)	Measurement Uncertainty (dB)
+25 dBm				+24 to +26	0.28
+20 dBm				+19 to +21	0.16
+15 dBm				+13.5 to +16.5	0.16
+10 dBm				+8.5 to +11.5	0.16
+5 dBm				+3.5 to +6.5	0.16
+0 dBm				–1.5 to +1.5	0.16
Calculated Offset		N/A	N/A	N/A	N/A
–5 dBm				–6.5 to –3.5	0.016
–10 dBm				–11.5 to –8.5	0.019
–15 dBm				–16.5 to –13.5	0.022
–20 dBm				–21.5 to –18.5	0.024
–25 dBm				–26.5 to –23.5	0.027
–30 dBm				–31.5 to –28.5	0.030
–35 dBm				–36.5 to –33.5	0.032
–40 dBm				–41.5 to –38.5	0.035
–45 dBm				–46.5 to –43.5	0.038
–50 dBm				–51.5 to –48.5	0.040
–55 dBm				–56.5 to –53.5	0.043
–60 dBm				–61.5 to –58.5	0.052
–65 dBm				–66.5 to –63.5	0.054
–70 dBm				–71.5 to –68.5	0.057
–75 dBm				–76.5 to –73.5	0.059
–80 dBm				–81.5 to –78.5	0.074
–85 dBm				–86.5 to –83.5	0.076
–90 dBm				–91.5 to –88.5	0.078
–95 dBm				–96.5 to –93.5	0.080
–100 dBm				–98.5 to –101.5	0.082

a. To ensure accurate measurements, see NOTES at the beginning of this section

MG369xC	Firmware Revision:	Operator:
Serial Number:	Date:	Options:

Section 3-9 Power Level Accuracy Test - MG3695C Only (15 MHz)

Power Sensor: For models with V connectors, use power sensor N5532B-504 with N to K and V to K adapter (Anritsu P/N 34VKF50 and 34NFK50). (2 of 27)

Set L1[a] (Note a) (Note b)	Measured Power (dBm)	Offset Value (dB) (See Section A-3)	Final Value (dBm)	Specification (Note c) (dBm)	Measurement Uncertainty (dB)
+25 dBm				+24 to +26	0.28
+20 dBm				+19 to +21	0.16
+15 dBm				+13.5 to +16.5	0.16
+10 dBm				+8.5 to +11.5	0.16
+5 dBm				+3.5 to +6.5	0.16
+0 dBm				–1.5 to +1.5	0.16
Calculated Offset		N/A	N/A	N/A	N/A
–5 dBm				–6.5 to –3.5	0.016
–10 dBm				–11.5 to –8.5	0.019
–15 dBm				–16.5 to –13.5	0.022
–20 dBm				–21.5 to –18.5	0.024
–25 dBm				–26.5 to –23.5	0.027
–30 dBm				–31.5 to –28.5	0.030
–35 dBm				–36.5 to –33.5	0.032
–40 dBm				–41.5 to –38.5	0.035
–45 dBm				–46.5 to –43.5	0.038
–50 dBm				–51.5 to –48.5	0.040
–55 dBm				–56.5 to –53.5	0.043
–60 dBm				–61.5 to –58.5	0.052
–65 dBm				–66.5 to –63.5	0.054
–70 dBm				–71.5 to –68.5	0.057
–75 dBm				–76.5 to –73.5	0.059
–80 dBm				–81.5 to –78.5	0.074
–85 dBm				–86.5 to –83.5	0.076
–90 dBm				–91.5 to –88.5	0.078
–95 dBm				–96.5 to –93.5	0.080
–100 dBm				–98.5 to –101.5	0.082

a. To ensure accurate measurements, see NOTES at the beginning of this section

MG369xC	Firmware Revision:	Operator:
Serial Number:	Date:	Options:

Section 3-9 Power Level Accuracy Test - MG3695C Only (60 MHz)

Power Sensor: For models with V connectors, use power sensor N5532B-504 with N to K and V to K adapter (Anritsu P/N 34VKF50 and 34NFK50). (3 of 27)

Set L1[a] (Note a) (Note b)	Measured Power (dBm)	Offset Value (dB) (See Section A-3)	Final Value (dBm)	Specification (Note c) (dBm)	Measurement Uncertainty (dB)
+25 dBm				+24 to +26	0.28
+20 dBm				+19 to +21	0.16
+15 dBm				+14 to +16	0.16
+10 dBm				+9 to +11	0.16
+5 dBm				+4 to +6	0.16
+0 dBm				–1 to +1	0.16
Calculated Offset		N/A	N/A	N/A	N/A
–5 dBm				–6 to –4	0.016
–10 dBm				–11 to –9	0.019
–15 dBm				–16 to –14	0.022
–20 dBm				–21 to –19	0.024
–25 dBm				–26 to –24	0.027
–30 dBm				–31 to –29	0.030
–35 dBm				–36 to –34	0.032
–40 dBm				–41 to –39	0.035
–45 dBm				–46 to –44	0.038
–50 dBm				–51 to –49	0.040
–55 dBm				–56 to –54	0.043
–60 dBm				–61 to –59	0.052
–65 dBm				–66 to –64	0.054
–70 dBm				–71 to –69	0.057
–75 dBm				–76 to –74	0.059
–80 dBm				–81 to –79	0.074
–85 dBm				–86 to –84	0.076
–90 dBm				–91 to –89	0.078
–95 dBm				–96 to –94	0.080
–100 dBm				–99 to –101	0.082

a. To ensure accurate measurements, see NOTES at the beginning of this section

MG369xC	Firmware Revision:	Operator:
Serial Number:	Date:	Options:

Section 3-9 Power Level Accuracy Test - MG3695C Only (500 MHz)

Power Sensor: For models with V connectors, use power sensor N5532B-504 with N to K and V to K adapter (Anritsu P/N 34VKF50 and 34NFK50). (4 of 27)

Set L1[a] (Note a) (Note b)	Measured Power (dBm)	Offset Value (dB) (See Section A-3)	Final Value (dBm)	Specification (Note c) (dBm)	Measurement Uncertainty (dB)
+25 dBm				+24 to +26	0.28
+20 dBm				+19 to +21	0.16
+15 dBm				+14 to +16	0.16
+10 dBm				+9 to +11	0.16
+5 dBm				+4 to +6	0.16
+0 dBm				–1 to +1	0.16
Calculated Offset		N/A	N/A	N/A	N/A
–5 dBm				–6 to –4	0.016
–10 dBm				–11 to –9	0.019
–15 dBm				–16 to –14	0.022
–20 dBm				–21 to –19	0.024
–25 dBm				–26 to –24	0.027
–30 dBm				–31 to –29	0.030
–35 dBm				–36 to –34	0.032
–40 dBm				–41 to –39	0.035
–45 dBm				–46 to –44	0.038
–50 dBm				–51 to –49	0.040
–55 dBm				–56 to –54	0.043
–60 dBm				–61 to –59	0.052
–65 dBm				–66 to –64	0.054
–70 dBm				–71 to –69	0.057
–75 dBm				–76 to –74	0.059
–80 dBm				–81 to –79	0.074
–85 dBm				–86 to –84	0.076
–90 dBm				–91 to –89	0.078
–95 dBm				–96 to –94	0.080
–100 dBm				–99 to –101	0.082

a. To ensure accurate measurements, see NOTES at the beginning of this section

MG369xC	Firmware Revision:	Operator:
Serial Number:	Date:	Options:

Section 3-9 Power Level Accuracy Test - MG3695C Only (600 MHz)

Power Sensor: For models with V connectors, use power sensor N5532B-504 with N to K and V to K adapter (Anritsu P/N 34VKF50 and 34NFK50). (5 of 27)

Set L1[a] (Note a) (Note b)	Measured Power (dBm)	Offset Value (dB) (See Section A-3)	Final Value (dBm)	Specification (Note c) (dBm)	Measurement Uncertainty (dB)
+25 dBm				+24 to +26	0.28
+20 dBm				+19 to +21	0.16
+15 dBm				+14 to +16	0.16
+10 dBm				+9 to +11	0.16
+5 dBm				+4 to +6	0.16
+0 dBm				–1 to +1	0.16
Calculated Offset		N/A	N/A	N/A	N/A
–5 dBm				–6 to –4	0.016
–10 dBm				–11 to –9	0.019
–15 dBm				–16 to –14	0.022
–20 dBm				–21 to –19	0.024
–25 dBm				–26 to –24	0.027
–30 dBm				–31 to –29	0.030
–35 dBm				–36 to –34	0.032
–40 dBm				–41 to –39	0.035
–45 dBm				–46 to –44	0.038
–50 dBm				–51 to –49	0.040
–55 dBm				–56 to –54	0.043
–60 dBm				–61 to –59	0.052
–65 dBm				–66 to –64	0.054
–70 dBm				–71 to –69	0.057
–75 dBm				–76 to –74	0.059
–80 dBm				–81 to –79	0.074
–85 dBm				–86 to –84	0.076
–90 dBm				–91 to –89	0.078
–95 dBm				–96 to –94	0.080
–100 dBm				–99 to –101	0.082

a. To ensure accurate measurements, see NOTES at the beginning of this section

MG369xC	Firmware Revision:	Operator:
Serial Number:	Date:	Options:

Section 3-9 Power Level Accuracy Test - MG3695C Only (1.0 GHz)

Power Sensor: For models with V connectors, use power sensor N5532B-504 with N to K and V to K adapter (Anritsu P/N 34VKF50 and 34NFK50). (6 of 27)

Set L1[a] (Note a) (Note b)	Measured Power (dBm)	Offset Value (dB) (See Section A-3)	Final Value (dBm)	Specification (Note c) (dBm)	Measurement Uncertainty (dB)
+25 dBm				+24 to +26	0.28
+20 dBm				+19 to +21	0.16
+15 dBm				+14 to +16	0.16
+10 dBm				+9 to +11	0.16
+5 dBm				+4 to +6	0.16
+0 dBm				–1 to +1	0.16
Calculated Offset		N/A	N/A	N/A	N/A
–5 dBm				–6 to –4	0.016
–10 dBm				–11 to –9	0.019
–15 dBm				–16 to –14	0.022
–20 dBm				–21 to –19	0.024
–25 dBm				–26 to –24	0.027
–30 dBm				–31 to –29	0.030
–35 dBm				–36 to –34	0.032
–40 dBm				–41 to –39	0.035
–45 dBm				–46 to –44	0.038
–50 dBm				–51 to –49	0.040
–55 dBm				–56 to –54	0.043
–60 dBm				–61 to –59	0.052
–65 dBm				–66 to –64	0.054
–70 dBm				–71 to –69	0.057
–75 dBm				–76 to –74	0.059
–80 dBm				–81 to –79	0.074
–85 dBm				–86 to –84	0.076
–90 dBm				–91 to –89	0.078
–95 dBm				–96 to –94	0.080
–100 dBm				–99 to –101	0.082

a. To ensure accurate measurements, see NOTES at the beginning of this section

MG369xC	Firmware Revision:	Operator:
Serial Number:	Date:	Options:

Section 3-9 Power Level Accuracy Test - MG3695C Only (2.0 GHz)

Power Sensor: For models with V connectors, use power sensor N5532B-504 with N to K and V to K adapter (Anritsu P/N 34VKF50 and 34NFK50). (7 of 27)

Set L1[a] (Note a) (Note b)	Measured Power (dBm)	Offset Value (dB) (See Section A-3)	Final Value (dBm)	Specification (Note c) (dBm)	Measurement Uncertainty (dB)
+25 dBm				+24 to +26	0.28
+20 dBm				+19 to +21	0.16
+15 dBm				+14 to +16	0.16
+10 dBm				+9 to +11	0.16
+5 dBm				+4 to +6	0.16
+0 dBm				–1 to +1	0.16
Calculated Offset		N/A	N/A	N/A	N/A
–5 dBm				–6 to –4	0.016
–10 dBm				–11 to –9	0.019
–15 dBm				–16 to –14	0.022
–20 dBm				–21 to –19	0.024
–25 dBm				–26 to –24	0.027
–30 dBm				–31 to –29	0.030
–35 dBm				–36 to –34	0.032
–40 dBm				–41 to –39	0.035
–45 dBm				–46 to –44	0.038
–50 dBm				–51 to –49	0.040
–55 dBm				–56 to –54	0.043
–60 dBm				–61 to –59	0.052
–65 dBm				–66 to –64	0.054
–70 dBm				–71 to –69	0.057
–75 dBm				–76 to –74	0.059
–80 dBm				–81 to –79	0.074
–85 dBm				–86 to –84	0.076
–90 dBm				–91 to –89	0.078
–95 dBm				–96 to –94	0.080
–100 dBm				–99 to –101	0.082

a. To ensure accurate measurements, see NOTES at the beginning of this section

MG369xC	Firmware Revision:	Operator:
Serial Number:	Date:	Options:

Section 3-9 Power Level Accuracy Test - MG3695C Only (4.0 GHz)

Power Sensor: For models with V connectors, use power sensor N5532B-504 with N to K and V to K adapter (Anritsu P/N 34VKF50 and 34NFK50). (8 of 27)

Set L1[a] (Note a) (Note b)	Measured Power (dBm)	Offset Value (dB) (See Section A-3)	Final Value (dBm)	Specification (Note c) (dBm)	Measurement Uncertainty (dB)
+25 dBm				+24 to +26	0.28
+20 dBm				+19 to +21	0.16
+15 dBm				+14 to +16	0.16
+10 dBm				+9 to +11	0.16
+5 dBm				+4 to +6	0.16
+0 dBm				–1 to +1	0.16
Calculated Offset		N/A	N/A	N/A	N/A
–5 dBm				–6 to –4	0.016
–10 dBm				–11 to –9	0.019
–15 dBm				–16 to –14	0.022
–20 dBm				–21 to –19	0.024
–25 dBm				–26 to –24	0.027
–30 dBm				–31 to –29	0.030
–35 dBm				–36 to –34	0.032
–40 dBm				–41 to –39	0.035
–45 dBm				–46 to –44	0.038
–50 dBm				–51 to –49	0.040
–55 dBm				–56 to –54	0.043
–60 dBm				–61 to –59	0.052
–65 dBm				–66 to –64	0.054
–70 dBm				–71 to –69	0.057
–75 dBm				–76 to –74	0.059
–80 dBm				–81 to –79	0.074
–85 dBm				–86 to –84	0.076
–90 dBm				–91 to –89	0.078
–95 dBm				–96 to –94	0.080
–100 dBm				–99 to –101	0.082

a. To ensure accurate measurements, see NOTES at the beginning of this section

MG369xC	Firmware Revision:	Operator:
Serial Number:	Date:	Options:

Section 3-9 Power Level Accuracy Test - MG3695C Only (6.0 GHz)

Power Sensor: For Models with V connectors, use power sensor N5532B-550 with 2.4 mm to 1.85 mm (V) adapter (P/N PE9673) (9 of 27)

Set L1[a] (Note a) (Note b)	Measured Power (dBm)	Offset Value (dB) (See Section A-3)	Final Value (dBm)	Specification (Note c) (dBm)	Measurement Uncertainty (dB)
+25 dBm				+24 to +26	0.30
+20 dBm				+19 to +21	0.18
+15 dBm				+14 to +16	0.18
+10 dBm				+9 to +11	0.18
+5 dBm				+4 to +6	0.18
+0 dBm				–1 to +1	0.18
Calculated Offset		N/A	N/A	N/A	N/A
–5 dBm				–6 to –4	0.016
–10 dBm				–11 to –9	0.019
–15 dBm				–16 to –14	0.022
–20 dBm				–21 to –19	0.024
–25 dBm				–26 to –24	0.027
–30 dBm				–31 to –29	0.030
–35 dBm				–36 to –34	0.032
–40 dBm				–41 to –39	0.035
–45 dBm				–46 to –44	0.038
–50 dBm				–51 to –49	0.040
–55 dBm				–56 to –54	0.043
–60 dBm				–61 to –59	0.052
–65 dBm				–66 to –64	0.054
–70 dBm				–71 to –69	0.057
–75 dBm				–76 to –74	0.059
–80 dBm				–81 to –79	0.074
–85 dBm				–86 to –84	0.076
–90 dBm				–91 to –89	0.078
–95 dBm				–96 to –94	0.080
–100 dBm				–99 to –101	0.082

a. To ensure accurate measurements, see NOTES at the beginning of this section

MG369xC	Firmware Revision:	Operator:
Serial Number:	Date:	Options:

Section 3-9 Power Level Accuracy Test - MG3695C Only (8.0 GHz)

Power Sensor: For Models with K connectors, use power sensor N5532B-550 with 2.4 mm to 1.85 mm (V) adapter (P/N PE9673) (10 of 27)

Set L1[a] (Note a) (Note b)	Measured Power (dBm)	Offset Value (dB) (See Section A-3)	Final Value (dBm)	Specification (Note c) (dBm)	Measurement Uncertainty (dB)
+25 dBm				+24 to +26	0.30
+20 dBm				+19 to +21	0.18
+15 dBm				+14 to +16	0.18
+10 dBm				+9 to +11	0.18
+5 dBm				+4 to +6	0.18
+0 dBm				–1 to +1	0.18
Calculated Offset		N/A	N/A	N/A	N/A
–5 dBm				–6 to –4	0.016
–10 dBm				–11 to –9	0.019
–15 dBm				–16 to –14	0.022
–20 dBm				–21 to –19	0.024
–25 dBm				–26 to –24	0.027
–30 dBm				–31 to –29	0.030
–35 dBm				–36 to –34	0.032
–40 dBm				–41 to –39	0.035
–45 dBm				–46 to –44	0.038
–50 dBm				–51 to –49	0.040
–55 dBm				–56 to –54	0.043
–60 dBm				–61 to –59	0.052
–65 dBm				–66 to –64	0.054
–70 dBm				–71 to –69	0.057
–75 dBm				–76 to –74	0.059
–80 dBm				–81 to –79	0.074
–85 dBm				–86 to –84	0.076
–90 dBm				–91 to –89	0.078
–95 dBm				–96 to –94	0.080
–100 dBm				–99 to –101	0.082

a. To ensure accurate measurements, see NOTES at the beginning of this section

MG369xC	Firmware Revision:	Operator:
Serial Number:	Date:	Options:

Section 3-9 Power Level Accuracy Test - MG3695C Only (10.0 GHz)

Power Sensor: For Models with K connectors, use power sensor N5532B-550 with 2.4 mm to 1.85 mm (V) adapter (P/N PE9673) (11 of 27)

Set L1[a] (Note a) (Note b)	Measured Power (dBm)	Offset Value (dB) (See Section A-3)	Final Value (dBm)	Specification (Note c) (dBm)	Measurement Uncertainty (dB)
+25 dBm				+24 to +26	0.30
+20 dBm				+19 to +21	0.18
+15 dBm				+14 to +16	0.18
+10 dBm				+9 to +11	0.18
+5 dBm				+4 to +6	0.18
+0 dBm				–1 to +1	0.18
Calculated Offset		N/A	N/A	N/A	N/A
–5 dBm				–6 to –4	0.016
–10 dBm				–11 to –9	0.019
–15 dBm				–16 to –14	0.022
–20 dBm				–21 to –19	0.024
–25 dBm				–26 to –24	0.027
–30 dBm				–31 to –29	0.030
–35 dBm				–36 to –34	0.032
–40 dBm				–41 to –39	0.035
–45 dBm				–46 to –44	0.038
–50 dBm				–51 to –49	0.040
–55 dBm				–56 to –54	0.043
–60 dBm				–61 to –59	0.052
–65 dBm				–66 to –64	0.054
–70 dBm				–71 to –69	0.057
–75 dBm				–76 to –74	0.059
–80 dBm				–81 to –79	0.074
–85 dBm				–86 to –84	0.076
–90 dBm				–91 to –89	0.078
–95 dBm				–96 to –94	0.080
–100 dBm				–99 to –101	0.082

a. To ensure accurate measurements, see NOTES at the beginning of this section

MG369xC	Firmware Revision:	Operator:
Serial Number:	Date:	Options:

Section 3-9 Power Level Accuracy Test - MG3695C Only (12.0 GHz)

Power Sensor: For Models with K connectors, use power sensor N5532B-550 with 2.4 mm to 1.85 mm (V) adapter (P/N PE9673) (12 of 27)

Set L1[a] (Note a) (Note b)	Measured Power (dBm)	Offset Value (dB) (See Section A-3)	Final Value (dBm)	Specification (Note c) (dBm)	Measurement Uncertainty (dB)
+25 dBm				+24 to +26	0.31
+20 dBm				+19 to +21	0.20
+15 dBm				+14 to +16	0.20
+10 dBm				+9 to +11	0.20
+5 dBm				+4 to +6	0.20
+0 dBm				–1 to +1	0.20
Calculated Offset		N/A	N/A	N/A	N/A
–5 dBm				–6 to –4	0.016
–10 dBm				–11 to –9	0.019
–15 dBm				–16 to –14	0.022
–20 dBm				–21 to –19	0.024
–25 dBm				–26 to –24	0.027
–30 dBm				–31 to –29	0.030
–35 dBm				–36 to –34	0.032
–40 dBm				–41 to –39	0.035
–45 dBm				–46 to –44	0.038
–50 dBm				–51 to –49	0.040
–55 dBm				–56 to –54	0.043
–60 dBm				–61 to –59	0.052
–65 dBm				–66 to –64	0.054
–70 dBm				–71 to –69	0.057
–75 dBm				–76 to –74	0.059
–80 dBm				–81 to –79	0.074
–85 dBm				–86 to –84	0.076
–90 dBm				–91 to –89	0.078
–95 dBm				–96 to –94	0.080
–100 dBm				–99 to –101	0.082

a. To ensure accurate measurements, see NOTES at the beginning of this section

MG369xC	Firmware Revision:	Operator:
Serial Number:	Date:	Options:

Section 3-9 Power Level Accuracy Test - MG3695C Only (14.0 GHz)

Power Sensor: For Models with K connectors, use power sensor N5532B-550 with 2.4 mm to 1.85 mm (V) adapter (P/N PE9673) (13 of 27)

Set L1[a] (Note a) (Note b)	Measured Power (dBm)	Offset Value (dB) (See Section A-3)	Final Value (dBm)	Specification (Note c) (dBm)	Measurement Uncertainty (dB)
+25 dBm				+24 to +26	0.31
+20 dBm				+19 to +21	0.20
+15 dBm				+14 to +16	0.20
+10 dBm				+9 to +11	0.20
+5 dBm				+4 to +6	0.20
+0 dBm				–1 to +1	0.20
Calculated Offset		N/A	N/A	N/A	N/A
–5 dBm				–6 to –4	0.016
–10 dBm				–11 to –9	0.019
–15 dBm				–16 to –14	0.022
–20 dBm				–21 to –19	0.024
–25 dBm				–26 to –24	0.027
–30 dBm				–31 to –29	0.030
–35 dBm				–36 to –34	0.032
–40 dBm				–41 to –39	0.035
–45 dBm				–46 to –44	0.038
–50 dBm				–51 to –49	0.040
–55 dBm				–56 to –54	0.043
–60 dBm				–61 to –59	0.052
–65 dBm				–66 to –64	0.054
–70 dBm				–71 to –69	0.057
–75 dBm				–76 to –74	0.059
–80 dBm				–81 to –79	0.074
–85 dBm				–86 to –84	0.076
–90 dBm				–91 to –89	0.078
–95 dBm				–96 to –94	0.080
–100 dBm				–99 to –101	0.084

a. To ensure accurate measurements, see NOTES at the beginning of this section

MG369xC	Firmware Revision:	Operator:
Serial Number:	Date:	Options:

Section 3-9 Power Level Accuracy Test - MG3695C Only (16.0 GHz)

Power Sensor: For Models with K connectors, use power sensor N5532B-550 with 2.4 mm to 1.85 mm (V) adapter (P/N PE9673) (14 of 27)

Set L1[a] (Note a) (Note b)	Measured Power (dBm)	Offset Value (dB) (See Section A-3)	Final Value (dBm)	Specification (Note c) (dBm)	Measurement Uncertainty (dB)
+25 dBm				+24 to +26	0.31
+20 dBm				+19 to +21	0.20
+15 dBm				+14 to +16	0.20
+10 dBm				+9 to +11	0.20
+5 dBm				+4 to +6	0.20
+0 dBm				–1 to +1	0.20
Calculated Offset		N/A	N/A	N/A	N/A
–5 dBm				–6 to –4	0.016
–10 dBm				–11 to –9	0.019
–15 dBm				–16 to –14	0.022
–20 dBm				–21 to –19	0.024
–25 dBm				–26 to –24	0.027
–30 dBm				–31 to –29	0.030
–35 dBm				–36 to –34	0.032
–40 dBm				–41 to –39	0.035
–45 dBm				–46 to –44	0.038
–50 dBm				–51 to –49	0.040
–55 dBm				–56 to –54	0.043
–60 dBm				–61 to –59	0.052
–65 dBm				–66 to –64	0.054
–70 dBm				–71 to –69	0.057
–75 dBm				–76 to –74	0.059
–80 dBm				–81 to –79	0.074
–85 dBm				–86 to –84	0.076
–90 dBm				–91 to –89	0.078
–95 dBm				–96 to –94	0.080
–100 dBm				–99 to –101	0.084

a. To ensure accurate measurements, see NOTES at the beginning of this section

MG369xC	Firmware Revision:	Operator:
Serial Number:	Date:	Options:

Section 3-9 Power Level Accuracy Test - MG3695C Only (18.0 GHz)

Power Sensor: For Models with K connectors, use power sensor N5532B-550 with 2.4 mm to 1.85 mm (V) adapter (P/N PE9673) (15 of 27)

Set L1[a] (Note a) (Note b)	Measured Power (dBm)	Offset Value (dB) (See Section A-3)	Final Value (dBm)	Specification (Note c) (dBm)	Measurement Uncertainty (dB)
+25 dBm				+24 to +26	0.31
+20 dBm				+19 to +21	0.20
+15 dBm				+14 to +16	0.20
+10 dBm				+9 to +11	0.20
+5 dBm				+4 to +6	0.20
+0 dBm				–1 to +1	0.20
Calculated Offset		N/A	N/A	N/A	N/A
–5 dBm				–6 to –4	0.016
–10 dBm				–11 to –9	0.019
–15 dBm				–16 to –14	0.022
–20 dBm				–21 to –19	0.024
–25 dBm				–26 to –24	0.027
–30 dBm				–31 to –29	0.030
–35 dBm				–36 to –34	0.032
–40 dBm				–41 to –39	0.035
–45 dBm				–46 to –44	0.038
–50 dBm				–51 to –49	0.040
–55 dBm				–56 to –54	0.043
–60 dBm				–61 to –59	0.052
–65 dBm				–66 to –64	0.054
–70 dBm				–71 to –69	0.057
–75 dBm				–76 to –74	0.059
–80 dBm				–81 to –79	0.074
–85 dBm				–86 to –84	0.076
–90 dBm				–91 to –89	0.078
–95 dBm				–96 to –94	0.080
–100 dBm				–99 to –101	0.084

a. To ensure accurate measurements, see NOTES at the beginning of this section

MG369xC	Firmware Revision:	Operator:
Serial Number:	Date:	Options:

Section 3-9 Power Level Accuracy Test - MG3695C Only (20.0 GHz)

Power Sensor: For Models with K connectors, use power sensor N5532B-550 with 2.4 mm to 1.85 mm (V) adapter (P/N PE9673) (16 of 27)

Set L1[a] (Note a) (Note b)	Measured Power (dBm)	Offset Value (dB) (See Section A-3)	Final Value (dBm)	Specification (Note c) (dBm)	Measurement Uncertainty (dB)
+25 dBm				+24 to +26	0.32
+20 dBm				+19 to +21	0.22
+15 dBm				+14 to +16	0.22
+10 dBm				+9 to +11	0.22
+5 dBm				+4 to +6	0.22
+0 dBm				–1 to +1	0.22
Calculated Offset		N/A	N/A	N/A	N/A
–5 dBm				–6 to –4	0.016
–10 dBm				–11 to –9	0.019
–15 dBm				–16 to –14	0.022
–20 dBm				–21 to –19	0.024
–25 dBm				–26 to –24	0.027
–30 dBm				–31 to –29	0.030
–35 dBm				–36 to –34	0.032
–40 dBm				–41 to –39	0.035
–45 dBm				–46 to –44	0.038
–50 dBm				–51 to –49	0.040
–55 dBm				–56 to –54	0.043
–60 dBm				–61 to –59	0.052
–65 dBm				–66 to –64	0.054
–70 dBm				–71 to –69	0.057
–75 dBm				–76 to –74	0.059
–80 dBm				–81 to –79	0.074
–85 dBm				–86 to –84	0.076
–90 dBm				–91 to –89	0.087
–95 dBm				–96 to –94	0.136
–100 dBm				–99 to –101	0.229

a. To ensure accurate measurements, see NOTES at the beginning of this section

MG369xC	Firmware Revision:	Operator:
Serial Number:	Date:	Options:

Section 3-9 Power Level Accuracy Test - MG3695C Only (22.0 GHz)

Power Sensor: For Models with K connectors, use power sensor N5532B-550 with 2.4 mm to 1.85 mm (V) adapter (P/N PE9673) (17 of 27)

Set L1[a] (Note a) (Note b)	Measured Power (dBm)	Offset Value (dB) (See Section A-3)	Final Value (dBm)	Specification (Note c) (dBm)	Measurement Uncertainty (dB)
+25 dBm				+24 to +26	0.35
+20 dBm				+19 to +21	0.26
+15 dBm				+14 to +16	0.26
+10 dBm				+9 to +11	0.26
+5 dBm				+4 to +6	0.26
+0 dBm				–1 to +1	0.26
Calculated Offset		N/A	N/A	N/A	N/A
–5 dBm				–6 to –4	0.016
–10 dBm				–11 to –9	0.019
–15 dBm				–16 to –14	0.022
–20 dBm				–21 to –19	0.024
–25 dBm				–26 to –24	0.027
–30 dBm				–31 to –29	0.030
–35 dBm				–36 to –34	0.032
–40 dBm				–41 to –39	0.035
–45 dBm				–46 to –44	0.038
–50 dBm				–51 to –49	0.040
–55 dBm				–56 to –54	0.043
–60 dBm				–61 to –59	0.052
–65 dBm				–66 to –64	0.054
–70 dBm				–71 to –69	0.057
–75 dBm				–76 to –74	0.059
–80 dBm				–81 to –79	0.074
–85 dBm				–86 to –84	0.076
–90 dBm				–91 to –89	0.087
–95 dBm				–96 to –94	0.136
–100 dBm				–99 to –101	0.229

a. To ensure accurate measurements, see NOTES at the beginning of this section

MG369xC	Firmware Revision:	Operator:
Serial Number:	Date:	Options:

Section 3-9 Power Level Accuracy Test - MG3695C Only (24.0 GHz)

Power Sensor: For Models with K connectors, use power sensor N5532B-550 with 2.4 mm to 1.85 mm (V) adapter (P/N PE9673)(18 of 27)

Set L1[a] (Note a) (Note b)	Measured Power (dBm)	Offset Value (dB) (See Section A-3)	Final Value (dBm)	Specification (Note c) (dBm)	Measurement Uncertainty (dB)
+25 dBm				+24 to +26	0.35
+20 dBm				+19 to +21	0.26
+15 dBm				+14 to +16	0.26
+10 dBm				+9 to +11	0.26
+5 dBm				+4 to +6	0.26
+0 dBm				–1 to +1	0.26
Calculated Offset		N/A	N/A	N/A	N/A
–5 dBm				–6 to –4	0.016
–10 dBm				–11 to –9	0.019
–15 dBm				–16 to –14	0.022
–20 dBm				–21 to –19	0.024
–25 dBm				–26 to –24	0.027
–30 dBm				–31 to –29	0.030
–35 dBm				–36 to –34	0.032
–40 dBm				–41 to –39	0.035
–45 dBm				–46 to –44	0.038
–50 dBm				–51 to –49	0.040
–55 dBm				–56 to –54	0.043
–60 dBm				–61 to –59	0.052
–65 dBm				–66 to –64	0.054
–70 dBm				–71 to –69	0.057
–75 dBm				–76 to –74	0.059
–80 dBm				–81 to –79	0.074
–85 dBm				–86 to –84	0.076
–90 dBm				–91 to –89	0.087
–95 dBm				–96 to –94	0.136
–100 dBm				–99 to –101	0.229

a. To ensure accurate measurements, see NOTES at the beginning of this section

MG369xC	Firmware Revision:	Operator:
Serial Number:	Date:	Options:

Section 3-9 Power Level Accuracy Test - MG3695C Only (26.0 GHz)

Power Sensor: For models with V connectors, use power sensor N5532B-550 with 2.4 mm to 1.85 mm (V) adapter (P/N PE9673). (19 of 27)

Set L1[a] (Note a) (Note b)	Measured Power (dBm)	Offset Value (dB) (See Section A-3)	Final Value (dBm)	Specification (Note c) (dBm)	Measurement Uncertainty (dB)
+25 dBm				+24 to +26	0.35
+20 dBm				+19 to +21	0.26
+15 dBm				+14 to +16	0.26
+10 dBm				+9 to +11	0.26
+5 dBm				+4 to +6	0.26
+0 dBm				–1 to +1	0.26
Calculated Offset		N/A	N/A	N/A	N/A
–5 dBm				–6 to –4	0.016
–10 dBm				–11 to –9	0.019
–15 dBm				–16 to –14	0.022
–20 dBm				–21 to –19	0.024
–25 dBm				–26 to –24	0.027
–30 dBm				–31 to –29	0.030
–35 dBm				–36 to –34	0.032
–40 dBm				–41 to –39	0.035
–45 dBm				–46 to –44	0.038
–50 dBm				–51 to –49	0.040
–55 dBm				–56 to –54	0.043
–60 dBm				–61 to –59	0.052
–65 dBm				–66 to –64	0.054
–70 dBm				–71 to –69	0.057
–75 dBm				–76 to –74	0.059
–80 dBm				–81 to –79	0.074
–85 dBm				–86 to –84	0.076
–90 dBm				–91 to –89	0.087
–95 dBm				–96 to –94	0.136
–100 dBm				–99 to –101	0.229

a. To ensure accurate measurements, see NOTES at the beginning of this section

MG369xC	Firmware Revision:	Operator:
Serial Number:	Date:	Options:

Section 3-9 Power Level Accuracy Test - MG3695C Only (28.0 GHz)

Power Sensor: For Models with K connectors, use power sensor N5532B-550 with 2.4 mm to 1.85 mm (V) adapter (P/N PE9673)(20 of 27)

Set L1[a] (Note a) (Note b)	Measured Power (dBm)	Offset Value (dB) (See Section A-3)	Final Value (dBm)	Specification (Note c) (dBm)	Measurement Uncertainty (dB)
+25 dBm				+24 to +26	0.37
+20 dBm				+19 to +21	0.29
+15 dBm				+14 to +16	0.29
+10 dBm				+9 to +11	0.29
+5 dBm				+4 to +6	0.29
+0 dBm				–1 to +1	0.29
Calculated Offset		N/A	N/A	N/A	N/A
–5 dBm				–6 to –4	0.016
–10 dBm				–11 to –9	0.019
–15 dBm				–16 to –14	0.022
–20 dBm				–21 to –19	0.024
–25 dBm				–26 to –24	0.027
–30 dBm				–31 to –29	0.030
–35 dBm				–36 to –34	0.032
–40 dBm				–41 to –39	0.035
–45 dBm				–46 to –44	0.038
–50 dBm				–51 to –49	0.040
–55 dBm				–56 to –54	0.043
–60 dBm				–61 to –59	0.052
–65 dBm				–66 to –64	0.054
–70 dBm				–71 to –69	0.057
–75 dBm				–76 to –74	0.059
–80 dBm				–81 to –79	0.074
–85 dBm				–86 to –84	0.076
–90 dBm				–91 to –89	0.083
–95 dBm				–96 to –94	0.123
–100 dBm				–99 to –101	0.208

a. To ensure accurate measurements, see NOTES at the beginning of this section

MG369xC	Firmware Revision:	Operator:
Serial Number:	Date:	Options:

Section 3-9 Power Level Accuracy Test - MG3695C Only (30.0 GHz)

Power Sensor: For Models with K connectors, use power sensor N5532B-550 with 2.4 mm to 1.85 mm (V) adapter (P/N PE9673) (21 of 27)

Set L1[a] (Note a) (Note b)	Measured Power (dBm)	Offset Value (dB) (See Section A-3)	Final Value (dBm)	Specification (Note c) (dBm)	Measurement Uncertainty (dB)
+25 dBm				+24 to +26	0.37
+20 dBm				+19 to +21	0.29
+15 dBm				+14 to +16	0.29
+10 dBm				+9 to +11	0.29
+5 dBm				+4 to +6	0.29
+0 dBm				–1 to +1	0.29
Calculated Offset		N/A	N/A	N/A	N/A
–5 dBm				–6 to –4	0.016
–10 dBm				–11 to –9	0.019
–15 dBm				–16 to –14	0.022
–20 dBm				–21 to –19	0.024
–25 dBm				–26 to –24	0.027
–30 dBm				–31 to –29	0.030
–35 dBm				–36 to –34	0.032
–40 dBm				–41 to –39	0.035
–45 dBm				–46 to –44	0.038
–50 dBm				–51 to –49	0.040
–55 dBm				–56 to –54	0.043
–60 dBm				–61 to –59	0.052
–65 dBm				–66 to –64	0.054
–70 dBm				–71 to –69	0.057
–75 dBm				–76 to –74	0.059
–80 dBm				–81 to –79	0.074
–85 dBm				–86 to –84	0.076
–90 dBm				–91 to –89	0.083
–95 dBm				–96 to –94	0.123
–100 dBm				–99 to –101	0.208

a. To ensure accurate measurements, see NOTES at the beginning of this section

MG369xC	Firmware Revision:	Operator:
Serial Number:	Date:	Options:

Section 3-9 Power Level Accuracy Test - MG3695C Only (32.0 GHz)

Power Sensor: For Models with K connectors, use power sensor N5532B-550 with 2.4 mm to 1.85 mm (V) adapter (P/N PE9673) (22 of 27)

Set L1[a] (Note a) (Note b)	Measured Power (dBm)	Offset Value (dB) (See Section A-3)	Final Value (dBm)	Specification (Note c) (dBm)	Measurement Uncertainty (dB)
+25 dBm				+24 to +26	0.39
+20 dBm				+19 to +21	0.31
+15 dBm				+14 to +16	0.31
+10 dBm				+9 to +11	0.31
+5 dBm				+4 to +6	0.31
+0 dBm				–1 to +1	0.31
Calculated Offset		N/A	N/A	N/A	N/A
–5 dBm				–6 to –4	0.016
–10 dBm				–11 to –9	0.019
–15 dBm				–16 to –14	0.022
–20 dBm				–21 to –19	0.024
–25 dBm				–26 to –24	0.027
–30 dBm				–31 to –29	0.030
–35 dBm				–36 to –34	0.032
–40 dBm				–41 to –39	0.035
–45 dBm				–46 to –44	0.038
–50 dBm				–51 to –49	0.040
–55 dBm				–56 to –54	0.043
–60 dBm				–61 to –59	0.052
–65 dBm				–66 to –64	0.054
–70 dBm				–71 to –69	0.057
–75 dBm				–76 to –74	0.059
–80 dBm				–81 to –79	0.083
–85 dBm				–86 to –84	0.132
–90 dBm				–91 to –89	0.225
–95 dBm				–96 to –94	0.355
–100 dBm				–99 to –101	0.513

a. To ensure accurate measurements, see NOTES at the beginning of this section

MG369xC	Firmware Revision:	Operator:
Serial Number:	Date:	Options:

Section 3-9 Power Level Accuracy Test - MG3695C Only (34.0 GHz)

Power Sensor: For Models with K connectors, use power sensor N5532B-550 with 2.4 mm to 1.85 mm (V) adapter (P/N PE9673)(23 of 27)

Set L1[(a)] (Note a) (Note b)	Measured Power (dBm)	Offset Value (dB) (See Section A-3)	Final Value (dBm)	Specification (Note c) (dBm)	Measurement Uncertainty (dB)
+25 dBm				+24 to +26	0.39
+20 dBm				+19 to +21	0.31
+15 dBm				+14 to +16	0.31
+10 dBm				+9 to +11	0.31
+5 dBm				+4 to +6	0.31
+0 dBm				–1 to +1	0.31
Calculated Offset		N/A	N/A	N/A	N/A
–5 dBm				–6 to –4	0.016
–10 dBm				–11 to –9	0.019
–15 dBm				–16 to –14	0.022
–20 dBm				–21 to –19	0.024
–25 dBm				–26 to –24	0.027
–30 dBm				–31 to –29	0.030
–35 dBm				–36 to –34	0.032
–40 dBm				–41 to –39	0.035
–45 dBm				–46 to –44	0.038
–50 dBm				–51 to –49	0.040
–55 dBm				–56 to –54	0.043
–60 dBm				–61 to –59	0.052
–65 dBm				–66 to –64	0.054
–70 dBm				–71 to –69	0.057
–75 dBm				–76 to –74	0.059
–80 dBm				–81 to –79	0.083
–85 dBm				–86 to –84	0.132
–90 dBm				–91 to –89	0.225
–95 dBm				–96 to –94	0.355
–100 dBm				–99 to –101	0.513

a. To ensure accurate measurements, see NOTES at the beginning of this section

MG369xC	Firmware Revision:	Operator:
Serial Number:	Date:	Options:

Section 3-9 Power Level Accuracy Test - MG3695C Only (36.0 GHz)

Power Sensor: For Models with K connectors, use power sensor N5532B-550 with 2.4 mm to 1.85 mm (V) adapter (P/N PE9673) (24 of 27)

Set L1[a] (Note a) (Note b)	Measured Power (dBm)	Offset Value (dB) (See Section A-3)	Final Value (dBm)	Specification (Note c) (dBm)	Measurement Uncertainty (dB)
+25 dBm				+24 to +26	0.39
+20 dBm				+19 to +21	0.31
+15 dBm				+14 to +16	0.31
+10 dBm				+9 to +11	0.31
+5 dBm				+4 to +6	0.31
+0 dBm				–1 to +1	0.31
Calculated Offset		N/A	N/A	N/A	N/A
–5 dBm				–6 to –4	0.016
–10 dBm				–11 to –9	0.019
–15 dBm				–16 to –14	0.022
–20 dBm				–21 to –19	0.024
–25 dBm				–26 to –24	0.027
–30 dBm				–31 to –29	0.030
–35 dBm				–36 to –34	0.032
–40 dBm				–41 to –39	0.035
–45 dBm				–46 to –44	0.038
–50 dBm				–51 to –49	0.040
–55 dBm				–56 to –54	0.043
–60 dBm				–61 to –59	0.052
–65 dBm				–66 to –64	0.054
–70 dBm				–71 to –69	0.057
–75 dBm				–76 to –74	0.059
–80 dBm				–81 to –79	0.083
–85 dBm				–86 to –84	0.132
–90 dBm				–91 to –89	0.225
–95 dBm				–96 to –94	0.355
–100 dBm				–99 to –101	0.513

a. To ensure accurate measurements, see NOTES at the beginning of this section

MG369xC	Firmware Revision:	Operator:
Serial Number:	Date:	Options:

Section 3-9 Power Level Accuracy Test - MG3695C Only (38.0 GHz)

Power Sensor: For Models with K connectors, use power sensor N5532B-550 with 2.4 mm to 1.85 mm (V) adapter (P/N PE9673) (25 of 27)

Set L1[a] (Note a) (Note b)	Measured Power (dBm)	Offset Value (dB) (See Section A-3)	Final Value (dBm)	Specification (Note c) (dBm)	Measurement Uncertainty (dB)
+25 dBm				+24 to +26	0.38
+20 dBm				+19 to +21	0.31
+15 dBm				+14 to +16	0.31
+10 dBm				+9 to +11	0.31
+5 dBm				+4 to +6	0.31
+0 dBm				–1 to +1	0.31
Calculated Offset		N/A	N/A	N/A	N/A
–5 dBm				–6 to –4	0.016
–10 dBm				–11 to –9	0.019
–15 dBm				–16 to –14	0.022
–20 dBm				–21 to –19	0.024
–25 dBm				–26 to –24	0.027
–30 dBm				–31 to –29	0.030
–35 dBm				–36 to –34	0.032
–40 dBm				–41 to –39	0.035
–45 dBm				–46 to –44	0.038
–50 dBm				–51 to –49	0.040
–55 dBm				–56 to –54	0.043
–60 dBm				–61 to –59	0.052
–65 dBm				–66 to –64	0.054
–70 dBm				–71 to –69	0.057
–75 dBm				–76 to –74	0.059
–80 dBm				–81 to –79	0.083
–85 dBm				–86 to –84	0.132
–90 dBm				–91 to –89	0.225
–95 dBm				–96 to –94	0.355
–100 dBm				–99 to –101	0.513

a. To ensure accurate measurements, see NOTES at the beginning of this section

MG369xC	Firmware Revision:	Operator:
Serial Number:	Date:	Options:

Section 3-9 Power Level Accuracy Test - MG3695C Only (40.0 GHz)

Power Sensor: For Models with K connectors, use power sensor N5532B-550 with 2.4 mm to 1.85 mm (V) adapter (P/N PE9673) (26 of 27)

Set L1[a] (Note a) (Note b)	Measured Power (dBm)	Offset Value (dB) (See Section A-3)	Final Value (dBm)	Specification (Note c) (dBm)	Measurement Uncertainty (dB)
+25 dBm				+24 to +26	0.38
+20 dBm				+19 to +21	0.31
+15 dBm				+14 to +16	0.31
+10 dBm				+9 to +11	0.31
+5 dBm				+4 to +6	0.31
+0 dBm				–1 to +1	0.31
Calculated Offset		N/A	N/A	N/A	N/A
–5 dBm				–6 to –4	0.016
–10 dBm				–11 to –9	0.019
–15 dBm				–16 to –14	0.022
–20 dBm				–21 to –19	0.024
–25 dBm				–26 to –24	0.027
–30 dBm				–31 to –29	0.030
–35 dBm				–36 to –34	0.032
–40 dBm				–41 to –39	0.035
–45 dBm				–46 to –44	0.038
–50 dBm				–51 to –49	0.040
–55 dBm				–56 to –54	0.043
–60 dBm				–61 to –59	0.052
–65 dBm				–66 to –64	0.054
–70 dBm				–71 to –69	0.057
–75 dBm				–76 to –74	0.059
–80 dBm				–81 to –79	0.083
–85 dBm				–86 to –84	0.132
–90 dBm				–91 to –89	0.225
–95 dBm				–96 to –94	0.355
–100 dBm				–99 to –101	0.513

a. To ensure accurate measurements, see NOTES at the beginning of this section

MG369xC	Firmware Revision:	Operator:
Serial Number:	Date:	Options:

Section 3-9 Power Level Accuracy Test - MG3695C Only (50.0 GHz)

Power Sensor: For Models with K connectors, use power sensor N5532B-550 with 2.4 mm to 1.85 mm (V) adapter (P/N PE9673) (27 of 27)

Set L1[a] (Note a) (Note b)	Measured Power (dBm)	Offset Value (dB) (See Section A-3)	Final Value (dBm)	Specification (Note c) (dBm)	Measurement Uncertainty (dB)
+25 dBm				+23.5 to +26.5	0.47
+20 dBm				+18.5 to +21.5	0.42
+15 dBm				+13.5 to +16.5	0.42
+10 dBm				+8.5 to +11.5	0.42
+5 dBm				+3.5 to +6.5	0.42
+0 dBm				–1.5 to +1.5	0.42
Calculated Offset		N/A	N/A	N/A	N/A
–5 dBm				–6.5 to –3.5	0.016
–10 dBm				–11.5 to –8.5	0.019
–15 dBm				–16.5 to –13.5	0.022
–20 dBm				–21.5 to –18.5	0.024
–25 dBm				–26.5 to –23.5	0.027
–30 dBm				–31.5 to –28.5	0.030
–35 dBm				–36.5 to –33.5	0.032
–40 dBm				–41.5 to –38.5	0.035
–45 dBm				–46.5 to –43.5	0.038
–50 dBm				–51.5 to –48.5	0.040
–55 dBm				–56.5 to –53.5	0.043
–60 dBm				–61.5 to –58.5	0.054

a. To ensure accurate measurements, see NOTES at the beginning of this section

MG369xC	Firmware Revision:	Operator:
Serial Number:	Date:	Options:

Section 3-9 Power Level Flatness Test (No Opt.2)

All MG369xC Models without Option 2 (1 of 3)

MG3691C and MG3692C
Set L1 to +17 dBm (for models with Option 22, set L1 to +15 dBm)

Frequency Range	Power Sensor	Step Size (MHz)	Maximum Power (dBm)	Minimum Power (dBm)	Variation (Max – Min) (dB)	Offset Value (dB) (See Section A-3)	Final Value (dBm)	Variation Spec. (dB)	Measurement Uncertainty (dB)
Minimum Frequency[a] to < 20 MHz (no Opt. 15x)[b]	N5532B-504 with adapter (P/N 34NFK50)	5						3.00	0.15
20 MHz to 50 MHz (no Opt. 15x)[b]	N5532B-504 with adapter (P/N 34NFK50)	10						1.60	0.15
50 MHz[c] to Maximum Frequency (no Option 15x)	N5532B-550 with adapter (P/N 11904D)	500						1.60	0.20
Minimum Frequency[a] to 50 MHz (with Opt. 15x)[b]	N5532B-504 with adapter (P/N 34NFK50)	10						3.00	0.15
50 MHz[c] to Maximum Frequency (with Opt. 15x)	N5532B-550 with adapter (P/N 11904D)	500						3.00	0.20

a. 100K if Option 22 installed or 10 MHz if Options 4 or 5 installed.

b. Perform test only if Option 4 or 5 installed.

c. 50 MHz if Option 4 or 5 installed otherwise 2 GHz.

MG369xC	Firmware Revision:	Operator:
Serial Number:	Date:	Options:

Section 3-9 Power Level Flatness Test (No Opt.2)

All MG369xC Models without Option 2 (2 of 3)

MG3693C and MG3694C
Set L1 to +6 dBm (for models with Option 22, set L1 to +4 dBm)

Frequency Range	Power Sensor	Step Size (MHz)	Maximum Power (dBm)	Minimum Power (dBm)	Variation (Max – Min) (dB)	Offset Value (dB) (See Section A-3)	Final Value (dBm)	Variation Spec. (dB)	Measurement Uncertainty (dB)
Minimum frequency[a] to < 20 MHz (no Opt. 15x)[b]	N5532B-504 with adapter (P/N 34NFK50)	5						3.00	0.15
20 MHz to 50 MHz (no Option 15x)[b]	N5532B-504 with adapter (P/N 34NFK50)	10						1.60	0.15
50 MHz[c] to Maximum Frequency (no Option 15x)	N5532B-550 with adapter (P/N 11904D)	500						1.60	0.22
Minimum Frequency[a] to 50 MHz (with Opt. 15x)[b]	N5532B-504 with adapter (P/N 34NFK50)	10						3.00	0.15
50 MHz[c] to Maximum Frequency (with Opt. 15x)	N5532B-550 with adapter (P/N 11904D)	500						3.00	0.22

a. 100K if Option 22 installed or 10 MHz if Options 4 or 5 installed.

b. Perform test only if Option 4 or 5 installed.

c. 50 MHz if Option 4 or 5 installed otherwise 2 GHz.

MG369xC	Firmware Revision:	Operator:
Serial Number:	Date:	Options:

Section 3-9 Power Level Flatness Test (No Opt.2)

All MG369xC Models without Option 2 (3 of 3)

MG3695C

Set L1 to +3 dBm (for models with Option 22, set L1 to +1 dBm)

Frequency Range	Power Sensor	Step Size (MHz)	Maximum Power (dBm)	Minimum Power (dBm)	Variation (Max – Min) (dB)	Offset Value (dB) (See Section A-3)	Final Value (dBm)	Variation Spec. (dB)	Measurement Uncertainty (dB)
< 20 MHz (no Opt. 15x)[a]	N5532B-504 with adapters (P/N 34VKF50 and 34NFK50)	5						3.00	0.16
20 MHz to 50 MHz (no Opt.15x)[a]	N5532B-504 with adapters (P/N 34VKF50 and 34NFK50)	10						1.60	0.16
50 MHz[b] to ≤ 40 GHz (no Opt. 15x)	N5532B-550 with adapter (P/N PE9673)	500						1.60	0.31
40 GHz to 50 GHz (no Opt.15x)	N5532B-550 with adapter (P/N PE9673)	500						2.20	0.42
Minimum Frequency[c] to 50 MHz (with Opt. 15x)[a]	N5532B-504 with adapters (P/N 34VKF50 and 34NFK50)	10						3.00	0.16
50 MHz[b] to Maximum Frequency (with Opt. 15x)	N5532B-550 with adapter (P/N PE9673)	200						3.00	0.42

a. Perform test only if Option 4 or 5 installed.

b. 50 MHz if Option 4 or 5 installed otherwise 2 GHz.

c. 100K if Option 22 installed or 10 MHz if Options 4 or 5 installed.

MG369xC	Firmware Revision:	Operator:
Serial Number:	Date:	Options:

Section 3-9 Power Level Flatness Test (+ Opt.2)

All MG369xC Models with Option 2 (1 of 3)

MG3691C and MG3692C - Set L1 to +15 dBm (for models with Option 2E or 22, set L1 to +13 dBm; for models with Option 2E and 22, set L1 to +11 dBm.)

Frequency Range	Power Sensor	Step Size (MHz)	Maximum Power (dBm)	Minimum Power (dBm)	Variation (Max – Min) (dB)	Offset Value (dB) (See Section A-3)	Final Value (dBm)	Variation Spec. (dB)	Measurement Uncertainty (dB)
Minimum Frequency[a] to < 20 MHz (no Opt. 15x)[b]	N5532B-504 with adapter (P/N 34NFK50)	5						3.00	0.15
20 MHz to 50 MHz (no Option 15x) [b]	N5532B-504 with adapter (P/N 34NFK50)	10						1.60	0.15
50 MHz[c] to Maximum Frequency (no Option 15x)	N5532B-550 with adapter (P/N 11904D)	500						1.60	0.20
Minimum Frequency[a] to 50 MHz (with Opt. 15x)[b]	N5532B-504 with adapter (P/N 34NFK50)	10						3.00	0.15
50 MHz[c] to Maximum Frequency (with Opt. 15x)	N5532B-550 with adapter (P/N 11904D)	500						3.00	0.20

a. 100K if Option 22 installed or 10 MHz if Options 4 or 5 installed.

b. Perform test only if Option 4 or 5 installed.

c. 50 MHz if Option 4 or 5 installed otherwise 2 GHz.

MG369xC	Firmware Revision:	Operator:
Serial Number:	Date:	Options:

Section 3-9 Power Level Flatness Test (+ Opt.2)

All MG369xC Models with Option 2 (2 of 3)

MG3693C and MG3694C

Set L1 to +3 dBm (for models with Option 22, set L1 to +1 dBm)

Frequency Range	Power Sensor	Step Size (MHz)	Maximum Power (dBm)	Minimum Power (dBm)	Variation (Max – Min) (dB)	Offset Value (See Section A-3)	Final Value (dBm)	Variation Spec. (dB)	Measurement Uncertainty (dB)
Minimum frequency[a] to < 20 MHz (no Opt. 15x)[b]	N5532B-504 with adapter (P/N 34NFK50)	5						3.00	0.15
20 MHz to 50 MHz (no Option 15x)[b]	N5532B-504 with adapter (P/N 34NFK50)	10						1.60	0.15
50 MHz[c] to Maximum Frequency (no Option 15x)	N5532B-550 with adapter (P/N 11904D)	500						1.60	0.22
Minimum Frequency[a] to 50 MHz (with Opt. 15x)[b]	N5532B-504 with adapter (P/N 34NFK50)	10						3.00	0.15
50 MHz[c] to Maximum Frequency (with Opt. 15x)	N5532B-550 with adapter (P/N 11904D)	500						3.00	0.22

a. 100K if Option 22 installed or 10 MHz if Options 4 or 5 installed.

b. Perform test only if Option 4 or 5 installed.

c. 50 MHz if Option 4 or 5 installed otherwise 2GHz.

MG369xC	Firmware Revision:	Operator:
Serial Number:	Date:	Options:

Section 3-9 Power Level Flatness Test (+ Opt.2)

All MG369xC Models with Option 2 (3 of 3)

MG3695C

Set L1 to +0 dBm (for models with Option 22, set L1 to -2 dBm.)

Frequency Range	Power Sensor	Step Size (MHz)	Maximum Power (dBm)	Minimum Power (dBm)	Variation (Max – Min) (dB)	Offset Value (See Section A-3)	Final Value (dBm)	Variation Spec. (dB)	Measurement Uncertainty (dB)
< 20 MHz (no Opt. 15x)[a]	N5532B-504 with adapters (P/N 34VKF50 and 34NFK50)	5						3.00	0.16
20 MHz to 50 MHz (no Option 15x)[a]	N5532B-504 with adapters (P/N 34VKF50 and 34NFK50)	10						1.60	0.16
50 MHz[b] to ≤ 40 GHz (no Option 15x)	N5532B-550 with adapter (P/N PE9673)	500						1.60	0.31
40 GHz to 50GHz (no Option 15x)	N5532B-550 with adapter (P/N PE9673)	500						2.20	0.42
Minimum Frequency[c] to 50 MHz (with Opt. 15x)[a]	N5532B-504 with adapters (P/N 34VKF50 and 34NFK50)	10						3.00	0.16
50 MHz[b] to Maximum Frequency (with Opt. 15x)	N5532B-550 with adapter (P/N PE9673)	500						3.00	0.42

a. Perform test only if Option 4 or 5 installed.

b. 50 MHz if Option 4 or 5 installed otherwise 2 GHz.

c. 100K if Option 22 installed or 10 MHz if Options 4 or 5 installed.

MG369xC	Firmware Revision:	Operator:
Serial Number:	Date:	Options:

Section 3-9 Maximum Leveled Power Test (No Opt. 15)

All MG369xC Models without Option 15 (1 of 3)

MG3691C

Set L1 to +20 dBm

Frequency Range (GHz)	Power Sensor	Step Size (MHz)	Minimum Measured Power (dBm)	Offset Value (dB) (See Section A-3)	Final Value (dBm)	Specification without Option 2 (dBm)[a]	Specification with Option 2 (dBm)[a]	Specification with Option 2E (dBm)[a]	Measurement Uncertainty (dB)
Minimum Frequency[b] to 1.999 999 999 w/Option 5 2.200 000 001 w/Option 4	N5532B-504 with adapter (P/N 34NFK50)	100				≥19.0	≥18.0	≥15.0	0.15
1.999 999 999 to 10.000 000 001 w/Option 5 2.200 000 001 to 10.000 000 001 w/Option 4 to Maximum Frequency	N5532B-550 with adapter (P/N 11904D)	500				≥19.0	≥18.0	≥13.0	0.17

a. For models with Option 22, derate specification by 2 dB.

b. 100K if Option 22 installed, 10 MHz if Options 4 or 5 is installed, or 2.0 GHz if options 4, 5 or 22 are *not* installed.

MG3692C

Set L1 to +20 dBm

Frequency Range (GHz)	Power Sensor	Step Size (MHz)	Minimum Measured Power (dBm)	Offset Value (dB) (See Section A-3)	Final Value (dBm)	Specification without Option 2 (dBm)[a]	Specification with Option 2 (dBm)[a]	Measurement Uncertainty (dB)
Minimum Frequency[b] to 1.999 999 999 w/Option 5 2.200 000 001 w/Option 4	N5532B-504 with adapter (P/N 34NFK50)	100				≥19.0	≥18.0	0.15
1.999 999 999 to 10.000 000 001 w/Option 5 2.200 000 001 to 10.000 000 001 w/Option 4	N5532B-550 with adapter (P/N 11904D)	500				≥19.0	≥18.0	0.17
10.000 000 001 to 20.0	N5532B-550 with adapter (P/N 11904D)	500				≥17.0	≥15.0	0.20

a. For models with Option 22, derate specification by 2 dB.

b. 100K if Option 22 installed, 10 MHz if Options 4 or 5 is installed, or 2.0 GHz if options 4, 5 or 22 are *not* installed.

MG369xC	Firmware Revision:	Operator:
Serial Number:	Date:	Options:

Section 3-9 Maximum Leveled Power Test (No Opt. 15)

All MG369xC Models without Option 15 (2 of 3)

MG3693C or MG3694C

Set L1 to +20 dBm

Frequency Range (GHz)	Power Sensor	Step Size (MHz)	Minimum Measured Power (dBm)	Offset Value (dB) (See Section A-3)	Final Value (dBm)	Specification without Option 2 (dBm)[a]	Specification with Option 2 (dBm)[a]	Measurement Uncertainty (dB)
Minimum Frequency[b] to 1.999 999 999 w/Option 5 2.200 000 001 w/Option 4	N5532B-504 with adapter (P/N 34NFK50)	100				≥15.0	≥14.0	0.15
1.999 999 999 to 10.000 000 001 w/Option 5 2.200 000 001 to 10.000 000 001 w/Option 4	N5532B-550 with adapter (P/N 11904D)	500				≥15.0	≥14.0	0.17
10.000 000 001.0 to 20.0	N5532B-550 with adapter (P/N 11904D)	500				≥12.0	≥10.0	0.20
20.0 to 40.0 [c]	N5532B-550 with adapter (P/N 11904D)	500				≥9.0	≥6.0	0.22

a. For models with Option 22, derate specification by 2 dB.

b. 100K if Option 22 installed, 10 MHz if Options 4 or 5 is installed, or 2.0 GHz if options 4, 5 or 22 are *not* installed.

c. Or the maximum frequency within instrument specification.

MG369xC	Firmware Revision:	Operator:
Serial Number:	Date:	Options:

Section 3-9 Maximum Leveled Power Test (No Opt. 15)

All MG369xC Models without Option 15 (3 of 3)

MG3695C

Set L1 to +20 dBm

Frequency Range (GHz)	Power Sensor	Step Size (MHz)	Minimum Measured Power (dBm)	Offset Value (dB) (See Section A-3)	Final Value (dBm)	Specification without Option 2 (dBm)[a]	Specification with Option 2 (dBm)[a]	Measurement Uncertainty (dB)
Minimum Frequency[b] to 1.999 999 999 w/Option 5 2.200 000 001 w/Option 4	N5532B-504 with adapters (P/N 34VKF50 and 34NFK50)	100				≥ 12.0	≥ 10.0	0.16
1.999 999 999 to 20 w/Option 5 2.200 000 001 to 20 w/Option 4	N5532B-550 with adapter (P/N PE9673)	500				≥ 10.0	≥ 8.0	0.22
20.000 000 001 to 40.0	N5532B-550 with adapter (P/N PE9673)	500				≥ 6.0	≥ 3.0	0.31
40.000 000 001 to 50.0	N5532B-550 with adapter (P/N PE9673)	500				≥ 3.0	≥ 0.0[c]	0.42

a. For models with Option 22, derate specification by 2 dB.

b. 100K if Option 22 installed or 10 MHz if Options 4 or 5 installed.

c. Typical 60 GHz to 70 GHz

MG369xC	Firmware Revision:	Operator:
Serial Number:	Date:	Options:

Section 3-9 Maximum Leveled Power Test (+ Opt. 15, No Opt. 4, 5)

All MG369xC Models with Option 15 and without Options 4 or 5 (1 of 3)

MG3691C

Set 1 to +29 dBm

Frequency Range (GHz)	Power Sensor	Step Size (MHz)	Minimum Measured Power (dBm)	Offset Value (dB) (See Section A-3)	Final Value (dBm)	Specification without Option 2 (dBm)[a]	Specification with Option 2 (dBm)[a]	Specification with Option 2E (dBm)[a]	Measurement Uncertainty (dB)
Minimum Frequency[b] to 1.999 999 999 w/Option 5 2.200 000 001 w/Option 4	N5532B-504 with adapter (P/N 34NFK50)	100				≥26.0	≥25.0	≥25.0	0.28
1.999 999 999 to 10 w/Option 5 2.200 000 001 to 10 w/Option 4	N5532B-550 with adapter (P/N 11904D)	500				≥26.0	≥25.0	≥25.0	0.29

a. For models with Option 22, derate specification by 2 dB.

b. 100K if Option 22 installed or 10 MHz if Options 4 or 5 installed.

MG3692C

Set L1 to +29 dBm

Frequency Range (GHz)	Power Sensor	Step Size (MHz)	Minimum Measured Power (dBm)	Offset Value (dB) (See Section A-3)	Final Value (dBm)	Specification without Option 2 (dBm)[a]	Specification with Option 2 (dBm)[a]	Measurement Uncertainty (dB)
Minimum Frequency[b] to 1.999 999 999 w/Option 5 2.200 000 001 w/Option 4	N5532B-504 with adapter (P/N 34NFK50)	100				≥26.0	≥25.0	0.28
1.999 999 999 to 10 w/Option 5 2.200 000 001 to 10 w/Option 4	N5532B-550 with adapter (P/N 11904D)	500				≥26.0	≥25.0	0.29
10.000 000 001 to 16.0	N5532B-550 with adapter (P/N 11904D)	500				≥25.0	≥23.0	0.29
16.000 000 001 to 20.0	N5532B-550 with adapter (P/N 11904D)	500				≥23.0	≥21.0	0.31

a. For models with Option 22, derate specification by 2 dB.

b. 100K if Option 22 installed or 10 MHz if Options 4 or 5 installed.

MG369xC	Firmware Revision:	Operator:
Serial Number:	Date:	Options:

Section 3-9 Maximum Leveled Power Test (+ Opt. 15, No Opt. 4, 5)

All MG369xC Models with Option 15 and without Options 4 or 5 (2 of 3)

MG3693C or MG3694C

Set L1 to +29 dBm

Frequency Range (GHz)	Power Sensor	Step Size (MHz)	Minimum Measured Power (dBm)	Offset Value (dB) (See Section A-3)	Final Value (dBm)	Specification without Option 2 (dBm)[a]	Specification with Option 2 (dBm)[a]	Measurement Uncertainty (dB)
Minimum Frequency[b] to 1.999 999 999 w/Option 5 2.200 000 001 w/Option 4	N5532B-504 with adapter (P/N 34NFK50)	100				≥23.0	≥21.0	0.28
1.999 999 999 to 10 w/Option 5 2.200 000 001 to 10 w/Option 4	N5532B-550 with adapter (P/N 11904D)	500				≥23.0	≥21.0	0.29
10.000 000 001 to 20.0	N5532B-550 with adapter (P/N 11904D)	500				≥23.0	≥21.0	0.31
20.000 000 001 to 40.0[c]	N5532B-550 with adapter (P/N 11904D)	500				≥19.0	≥17.0	0.34

a. For models with Option 22, derate specification by 2 dB.

b. 100K if Option 22 installed or 10 MHz if Options 4 or 5 installed.

c. Or the maximum frequency within instrument specification.

MG369xC	Firmware Revision:	Operator:
Serial Number:	Date:	Options:

Section 3-9 Maximum Leveled Power Test (+ Opt. 15, No Opt. 4, 5)

All MG369xC Models with Option 15 and without Options 4 or 5 (3 of 3)

MG3695C

Set L1 to +29 dBm

Frequency Range (GHz)	Power Sensor	Step Size (MHz)	Minimum Measured Power (dBm)	Offset Value (dB) (See Section A-3)	Final Value (dBm)	Specification without Option 2 (dBm)[a]	Specification with Option 2 (dBm)[a]	Measurement Uncertainty (dB)
Minimum Frequency[b] to 1.999 999 999 w/Option 5 2.200 000 001 w/Option 4	N5532B-504 with adapters (P/N 34VKF50 and 34NFK50)	100				≥23.0	≥21.0	0.28
1.999 999 999 to 20 w/Option 5 2.200 000 001 to 20 w/Option 4	N5532B-550 with adapter (P/N PE9673)	500				≥23.0	≥21.0	0.32
20.000 000 001 to 40.0	N5532B-550 with adapter (P/N PE9673)	500				≥19.0	≥17.0	0.38
40.000 000 001 to 50.0	N5532B-550 with adapter (P/N PE9673)	500				≥13.0	≥10.0	0.47

a. For models with Option 22, derate specification by 2 dB.

b. 100K if Option 22 installed or 10 MHz if Options 4 or 5 installed.

MG369xC	Firmware Revision:	Operator:
Serial Number:	Date:	Options:

Section 3-9 Maximum Leveled Power Test (+ Opt. 15, + Opt. 4, 5)

All MG369xC Models with Option 15 and Option 4 or 5 (1 of 3)

MG3691C

Set L1 to +29 dBm

Frequency Range (GHz)	Power Sensor	Step Size (MHz)	Minimum Measured Power (dBm)	Offset Value (dB) (See Section A-3)	Final Value (dBm)	Specification without Option 2 (dBm)[a]	Specification with Option 2 (dBm)[a]	Specification with Option 2E (dBm)[a]	Measurement Uncertainty (dB)
Minimum Frequency[b] to 1.999 999 999 w/Option 5 2.200 000 001 w/Option 4	N5532B-504 with adapter (P/N 34NFK50)	250				≥19.0	≥18.0	≥15.0	0.28
1.999 999 999 to 10 w/Option 5 > 2.200 000 001 to 10 w/Option 4	N5532B-550 with adapter (P/N 11904D)	500				≥23.0	≥24.0	≥16.0	0.29

a. For models with Option 22, derate specification by 2 dB.

b. 100K if Option 22 installed or 10 MHz if Options 4 or 5 installed.

MG3692C

Set L1 to +29 dBm

Frequency Range (GHz)	Power Sensor	Step Size (MHz)	Minimum Measured Power (dBm)	Offset Value (dB) (See Section A-3)	Final Value (dBm)	Specification without Option 2 (dBm)[a]	Specification with Option 2 (dBm)[a]	Measurement Uncertainty (dB)
Minimum Frequency[b] to 1.999 999 999 w/Option 5 2.200 000 001 w/Option 4	N5532B-504 with adapter (P/N 34NFK50)	250				≥19.0	≥18.0	0.28
1.999 999 999 to 10 w/Option 5 2.200 000 001 to 10 w/Option 4	N5532B-550 with adapter (P/N 11904D)	500				≥25.0	≥24.0	0.29
10.000 000 001 to 16	N5532B-550 with adapter (P/N 11904D)	500				≥22.0	≥20.0	0.29
16.000 000 001 to 20	N5532B-550 with adapter (P/N 11904D)	500				≥21.0	≥19.0	0.31

a. For models with Option 22, derate specification by 2 dB.

b. 100K if Option 22 installed or 10 MHz if Options 4 or 5 installed.

MG369xC	Firmware Revision:	Operator:
Serial Number:	Date:	Options:

Section 3-9 Maximum Leveled Power Test (+ Opt. 15, + Opt. 4, 5)

All MG369xC Models with Option 15 and Options 4 or 5 (2 of 3)

MG3693C

Set L1 to +29 dBm

Frequency Range (GHz)	Power Sensor	Step Size (MHz)	Minimum Measured Power (dBm)	Offset Value (dB) (See Section A-3)	Final Value (dBm)	Specification without Option 2 (dBm)[a]	Specification with Option 2 (dBm)[a]	Measurement Uncertainty (dB)
Minimum Frequency[b] to 1.999 999 999 w/Option 5 2.200 000 001 w/Option 4	N5532B-504 with adapter (P/N 34NFK50)	200				≥17.0	≥16.0	0.28
1.999 999 999 to 20 w/Option 5 2.200 000 001 to 20 w/Option 4	N5532B-550 with adapter (P/N 11904D)	200				≥21.0	≥19.0	0.31
20.000 000 001 to 31.8	N5532B-550 with adapter (P/N 11904D)	200				≥17.0	≥15.0	0.34

a. For models with Option 22, derate specification by 2 dB.

b. 100K if Option 22 installed or 10 MHz if Options 4 or 5 installed.

MG3694C

Set L1 to +29 dBm

Frequency Range (GHz)	Power Sensor	Step Size (MHz)	Minimum Measured Power (dBm)	Offset Value (dB) (See Section A-3)	Final Value (dBm)	Specification without Option 2 (dBm)[a]	Specification with Option 2 (dBm)[a]	Measurement Uncertainty (dB)
Minimum Frequency[b] to 1.999 999 999 w/Option 5 2.200 000 001 w/Option 4	N5532B-504 with adapter (P/N 34NFK50)	200				≥17.0	≥16.0	0.28
1.999 999 999 to 20 w/Option 5 2.200 000 001 to 20 w/Option 4	N5532B-550 with adapter (P/N 11904D)	200				≥21.0	≥19.0	0.31
20.000 000 001 to 40.0	N5532B-550 with adapter (P/N 11904D)	200				≥17.0	≥15.0	0.34

a. For models with Option 22, derate specification by 2 dB.

b. 100K if Option 22 installed or 10 MHz if Options 4 or 5 installed.

MG369xC	Firmware Revision:	Operator:
Serial Number:	Date:	Options:

Section 3-9 Maximum Leveled Power Test (+ Opt. 15, + Opt. 4, 5)

All MG369xC Models with Option 15 and Options 4 or 5 (3 of 3)

MG3695C

Set L1 to +29 dBm

Frequency Range (GHz)	Power Sensor	Step Size (MHz)	Minimum Measured Power (dBm)	Offset Value (dB) (See Section A-3)	Final Value (dBm)	Specification without Option 2 (dBm)[a]	Specification with Option 2 (dBm)[a]	Measurement Uncertainty (dB)
Minimum Frequency[b] to 1.999 999 999 w/Option 5 2.200 000 001 w/Option 4	N5532B-504 with adapter (P/N 34NFK50)	200				≥16.0	≥14.0	0.28
1.999 999 999 to 20 w/Option 5 2.200 000 001 to 20 w/Option 4	N5532B-550 with adapter (P/N PE9673)	200				≥21.0	≥19.0	0.32
20.000 000 001 to 40.0	N5532B-550 with adapter (P/N PE9673)	200				≥17.0	≥15.0	0.38
40.000 000 001 to 50.0	N5532B-550 with adapter (P/N PE9673)	200				≥11.0	≥8.0	0.47

a. For models with Option 22, derate specification by 2 dB.

b. 100K if Option 22 installed or 10 MHz if Options 4 or 5 installed.

MG369xC	Firmware Revision:	Operator:
Serial Number:	Date:	Options:

Section 3-10 Frequency Modulation Tests (+ Opt.12 or 28x)

All MG369xC Models with Option 12 or 28x (1 of 6)

Note: All tests use Armored cable p/n 3670K50-2 and adapter p/n 11904D with the exception of the MG3695C which uses P/N 3670V50A-2 and adapter P/N PE9673.

Locked External FM Accuracy at 5 GHz

Measured Test Results	Offset Value (%) (See Section A-3)	Final Value (%)	Specification	Measurement Uncertainty
Vmodon =			N/A	None
Vmodoff =			N/A	None
FMerror% =	N/A	N/A	10%	2.68%

Locked Low-Noise External FM Accuracy at 5 GHz

Measured Test Results	Offset Value (%) (See Section A-3)	Final Value (%)	Specification	Measurement Uncertainty
Vmodon =			N/A	None
Vmodoff =			N/A	None
FMerror% =	N/A	N/A	10%	2.68%

Locked External FM Accuracy at 20 GHz

Measured Test Results	Offset Value (%) (See Section A-3)	Final Value (%)	Specification	Measurement Uncertainty
Vmodon =			N/A	None
Vmodoff =			N/A	None
FMerror% =	N/A	N/A	10%	3.23%

Locked Low-Noise External FM Accuracy at 20 GHz

Measured Test Results	Offset Value (%) (See Section A-3)	Final Value (%)	Specification	Measurement Uncertainty
Vmodon =			N/A	None
Vmodoff =			N/A	None
FMerror% =	N/A	N/A	10%	3.23%

MG369xC	Firmware Revision:	Operator:
Serial Number:	Date:	Options:

Section 3-10 Frequency Modulation Tests (+ Opt.12 or 28x)

All MG369xC Models with Option 12 or 28x (2 of 6)

Note: All tests use Armored cable p/n 3670K50-2 and adapter p/n 11904D with the exception of the MG3695C which uses P/N 3670V50A-2 and adapter P/N PE9673.

Locked Internal FM Accuracy at 5 GHz

Measured Test Results	Offset Value (%) (See Section A-3)	Final Value (%)	Specification	Measurement Uncertainty
Vmodon =			N/A	None
Vmodoff =			N/A	None
FMerror% =	N/A	N/A	10%	2.68%

Locked Low-Noise Internal FM Accuracy at 5 GHz

Measured Test Results	Offset Value (%) (See Section A-3)	Final Value (%)	Specification	Measurement Uncertainty
Vmodon =			N/A	None
Vmodoff =			N/A	None
FMerror% =	N/A	N/A	10%	2.68%

Locked Internal FM Accuracy at 20 GHz

Measured Test Results	Offset Value (%) (See Section A-3)	Final Value (%)	Specification	Measurement Uncertainty
Vmodon =			N/A	None
Vmodoff =			N/A	None
FMerror% =	N/A	N/A	10%	3.23%

Locked Low-Noise Internal FM Accuracy at 20 GHz

Measured Test Results	Offset Value (%) (See Section A-3)	Final Value (%)	Specification	Measurement Uncertainty
Vmodon =			N/A	None
Vmodoff =			N/A	None
FMerror% =	N/A	N/A	10%	3.23%

MG369xC	Firmware Revision:	Operator:
Serial Number:	Date:	Options:

Section 3-10 Frequency Modulation Tests (+ Opt.12 or 28x)

All MG369xC Models with Option 12 or 28x (3 of 6)

Note: All tests use Armored cable p/n 3670K50-2 and adapter p/n 11904D with the exception of the MG3695C which uses P/N 3670V50A-2 and adapter P/N PE9673.

Wide External ΦM Accuracy at 5 GHz

Measured Test Results	Offset Value (%) (See Section A-3)	Final Value (%)	Specification	Measurement Uncertainty
Vmodon =			N/A	None
Vmodoff =			N/A	None
ΦMerror% =	N/A	N/A	10%	2.68%

Narrow External ΦM Accuracy at 5 GHz

Measured Test Results	Offset Value (%) (See Section A-3)	Final Value (%)	Specification	Measurement Uncertainty
Vmodon =			N/A	None
Vmodoff =			N/A	None
ΦMerror% =	N/A	N/A	10%	2.68%

Wide External ΦM Accuracy at 20 GHz

Measured Test Results	Offset Value (%) (See Section A-3)	Final Value (%)	Specification	Measurement Uncertainty
Vmodon =			N/A	None
Vmodoff =			N/A	None
ΦMerror% =	N/A	N/A	10%	3.23%

Narrow External ΦM Accuracy at 20 GHz

Measured Test Results	Offset Value (%) (See Section A-3)	Final Value (%)	Specification	Measurement Uncertainty
Vmodon =			N/A	None
Vmodoff =			N/A	None
ΦMerror% =	N/A	N/A	10%	3.23%

MG369xC	Firmware Revision:	Operator:
Serial Number:	Date:	Options:

Section 3-10 Frequency Modulation Tests (+ Opt.12 or 28x)

All MG369xC Models with Option 12 or 28x (4 of 6)

Note: All tests use Armored cable p/n 3670K50-2 and adapter p/n 11904D with the exception of the MG3695C which uses P/N 3670V50A-2 and adapter P/N PE9673.

Wide Internal ΦM Accuracy at 5 GHz

Measured Test Results	Offset Value (%) (See Section A-3)	Final Value (%)	Specification	Measurement Uncertainty
Vmodon =			N/A	None
Vmodoff =			N/A	None
ΦMerror% =	N/A	N/A	10%	2.68%

Narrow Internal ΦM Accuracy at 5 GHz

Measured Test Results	Offset Value (%) (See Section A-3)	Final Value (%)	Specification	Measurement Uncertainty
Vmodon =			N/A	None
Vmodoff =			N/A	None
ΦMerror% =	N/A	N/A	10%	2.68%

Wide Internal ΦM Accuracy at 20 GHz

Measured Test Results	Offset Value (%) (See Section A-3)	Final Value (%)	Specification	Measurement Uncertainty
Vmodon =			N/A	None
Vmodoff =			N/A	None
ΦMerror% =	N/A	N/A	10%	3.23%

Narrow Internal ΦM Accuracy at 20 GHz

Measured Test Results	Offset Value (%) (See Section A-3)	Final Value (%)	Specification	Measurement Uncertainty
Vmodon =			N/A	None
Vmodoff =			N/A	None
ΦMerror% =	N/A	N/A	10%	3.23%

MG369xC	Firmware Revision:	Operator:
Serial Number:	Date:	Options:

Section 3-10 Frequency Modulation Tests (+ Opt.12 or 28x)

All MG369xC Models with Option 12 or 28x (5 of 6)

Note: All tests use Armored cable p/n 3670K50-2 and adapter p/n 11904D with the exception of the MG3695C which uses P/N 3670V50A-2 and adapter P/N PE9673.

Locked External FM Flatness

Function Generator Frequency	MG369xC FM Sensitivity	Vmodoff (dBm)	Vmodon (dBm)	Mod Index	FMflat (dB)	Offset Value (dB) (See Section A-3)	Final Value (dB)	Specification (dB)	Measurement Uncertainty (dB)
10 kHz	10 kHz/V							±1.0	0.12
20 kHz	20 kHz/V							±1.0	0.12
50 kHz	50 kHz/V							±1.0	0.12
99.8 kHz[a]	99.8 kHz/V				Reference	–	–	–	–
200 kHz	200 kHz/V							±1.0	0.12
500 kHz	500 MHz/V							±1.0	0.12
1 MHz	1 MHz/V							±1.0	0.12
9.98 MHz[b]	9.98 MHz/V[c]							±3.0	0.12

a. A potential spurious beat note exists at a 100 kHz rate that can interfere with the carrier frequency null measurement. Therefore, The measurement is performed at a 99.8 kHz rate with a function generator multimeter reading of 0.7070 Vrms.

b. Bandwidth test.

c. VBW setting on the spectrum analyzer may need to be reduced to 30 Hz to obtain a stable reading.

Narrow External ΦM Flatness

Function Generator Frequency	MG369xC ΦM Sensitivity	Vmodoff (dBm)	Vmodon (dBm)	Mod Index	FMflat (dB)	Offset Value (dB) (See Section A-3)	Final Value (dB)	Specification (dB)	Measurement Uncertainty (dB)
10 kHz	1 rad/V							±1.0	0.12
20 kHz	1 rad/V							±1.0	0.12
50 kHz	1 rad/V							±1.0	0.12
99.8 kHz[a]	1 rad/V				Reference	–	–	–	–
200 kHz	1 rad/V							±1.0	0.12
500 kHz	1 rad/V							±1.0	0.12
1 MHz	1 rad/V							±1.0	0.12
10 MHz[b]	1 rad/V[c]							±3.0	0.12

a. A potential spurious beat note exists at a 100 kHz rate that can interfere with the carrier frequency null measurement. Therefore, The measurement is performed at a 99.8 kHz rate with a function generator multimeter reading of 0.7070 Vrms.

b. Bandwidth test.

c. VBW setting on the spectrum analyzer may need to be reduced to 30 Hz to obtain a stable reading.

MG369xC	Firmware Revision:	Operator:
Serial Number:	Date:	Options:

Section 3-10 Frequency Modulation Test

All MG369xC Models with Option 12 or 28x (6 of 6)

Note: All tests use Armored cable p/n 3670K50-2 and adapter p/n 11904D with the exception of the MG3695C which uses P/N 3670V50A-2 and adapter P/N PE9673.

Wide External ΦM Flatness

Function Generator Frequency	MG369xC ΦM Sensitivity	Vmodoff (dBm)	Vmodon (dBm)	Mod Index	FMflat (dB)	Offset Value (dB) (See Section A-3)	Final Value (dB)	Specification (dB)	Measurement Uncertainty (dB)
10 kHz	1 rad/V							±1.0	0.12
20 kHz	1 rad/V							±1.0	0.12
50 kHz	1 rad/V							±1.0	0.12
99.8 kHz[a]	1 rad/V				Reference	–	–	–	–
200 kHz	1 rad/V							±1.0	0.12
500 kHz	1 rad/V							±1.0	0.12

a. A potential spurious beat note exists at a 100 kHz rate that can interfere with the carrier frequency null measurement. Therefore, The measurement is performed at a 99.8 kHz rate with a function generator multimeter reading of 0.7070 Vrms.

Unlocked Narrow External FM Accuracy at 5 GHz

FMref (GHz)	FMmod (GHz)	FMerr (%)	Offset Value (%) (See Section A-3)	Final Value (%)	Specification (%)	Measurement Uncertainty (%)
					10	0.1

MG369xC	Firmware Revision:	Operator:
Serial Number:	Date:	Options:

Section 3-11 Amplitude Modulation Test (+ Opt. 14 or 28x)

All MG369xC Models with Option 14 or 28x (1 of 3)

All tests use power sensor P/N 5532B-550 and adapter P/N11904D with the exception of the MG3695C which uses power sensor PN 5532B-550 and adapter P/N PE9673.

Note: The attenuator value and type is determined based on procedure.

External AM Accuracy vs. Frequency at 50% Modulation

DUT F1 (GHz)	PK1 (%)	PK2 (%)	M (%)	Offset Value (%) (See Section A-3)	Final Value (%)	Specification (%)	Measurement Uncertainty (+/- %)
1.0						45 to 55	0.35%
1.4						45 to 55	0.35%
2.2						45 to 55	0.35%
2.3						45 to 55	0.35%
5						45 to 55	0.74%
8.3						45 to 55	0.74%
8.4						45 to 55	0.74%
14						45 to 55	0.74%
20						45 to 55	0.74%
23						45 to 55	0.74%
26.5						45 to 55	0.74%
30						45 to 55	1.32%
33						45 to 55	2.92%
36						45 to 55	2.92%
40						45 to 55	2.92%

MG369xC	Firmware Revision:	Operator:
Serial Number:	Date:	Options:

Section 3-11 Amplitude Modulation Test (+ Opt. 14 or 28x)

All MG369xC Models with Option 14 or 28x (2 of 3)

All tests use power sensor P/N 5532B-550 and adapter P/N11904D with the exception of the MG3695C which uses power sensor PN 5532B-550 and adapter P/N PE9673.

Note: The attenuator value and type is determined based on procedure.

Internal AM Accuracy vs. Frequency at 50% Modulation

DUT F1 (GHz)	PK1 (%)	PK2 (%)	M (%)	Offset Value (%) (See Section A-3)	Final Value (%)	Specification (%)	Measurement Uncertainty (+/- %)
1.0						45 to 55	0.35%
1.4						45 to 55	0.35%
2.2						45 to 55	0.35%
2.3						45 to 55	0.35%
5						45 to 55	0.74%
8.3						45 to 55	0.74%
8.4						45 to 55	0.74%
14						45 to 55	0.74%
20						45 to 55	0.74%
23						45 to 55	0.74%
26.5						45 to 55	0.74%
30						45 to 55	1.32%
33						45 to 55	2.92%
36						45 to 55	2.92%
40						45 to 55	2.92%

MG369xC	Firmware Revision:	Operator:
Serial Number:	Date:	Options:

Section 3-11 Amplitude Modulation Test (+ Opt. 14 or 28x)

All MG369xC Models with Option 14 or 28x (3 of 3)

All tests use power sensor P/N 5532B-550 and adapter P/N11904D with the exception of the MG3695C which uses power sensor PN 5532B-550 and adapter P/N PE9673.

Note: The attenuator value and type is determined based on procedure.

AM Flatness

DUT F1 (GHz)	MO (%)	M1 (%)	M2 (%)	M3 (%)	M4 (%)	M5 (%)	M6 (%)	M7 (%)	M8 (%)	M9 (%)	M10 (%)	AMflat (dB)	Offset Value (dB) (See Section A-3)	Final Value (dB)	Spec (dB)	MU [a] (%)
AM rate (Hz)	50	1 k	2 k	3 k	4 k	5 k	6 k	7 k	8 k	9 k	10 k	N/A			N/A	N/A
1.0															±0.30	0.27%
1.4															±0.30	0.27%
2.2															±0.30	0.27%
2.3															±0.30	0.27%
5															±0.30	0.31%
8.3															±0.30	0.31%
8.4															±0.30	0.31%
14															±0.30	0.31%
20															±0.30	0.31%
23															±0.30	0.31%
26.5															±0.30	0.31%
30															±0.30	0.82%
33															±0.30	0.82%
36															±0.30	0.82%
40															±0.30	0.82%

a. MU = Measurement Uncertainty

MG369xC	Firmware Revision:	Operator:
Serial Number:	Date:	Options:

Section 3-12 Pulse Modulation Tests (+ Opt. 26x or 27)

All MG369xC Models with Option 26x or 27 (1 of 3)

Pulse Rise and Fall Times

DUT Frequency (GHz)	Rise Time (ns)	Fall Time (ns)	Specification (ns)	Measurement Uncertainty (± ns)
0.500 000 001			N/A (Option 4) 10 (Option 5)	0.023
1.200 000 001			N/A (Option 4) 10 (Option 5)	0.023
1.900 000 001			N/A (Option 4) 10 (Option 5)	0.023
5.000 000 001			10	0.023
14.000 000 001			10	0.023
22.000 000 001			10	0.023
28.000 000 001			10	0.023
34.000 000 001			10	0.023
41.000 000 001			10	0.023

Pulse Overshoot

DUT Frequency (GHz)	Overshoot (%)	Specification (%)	Measurement Uncertainty (%)
0.500 000 001		10 (Option 4) 10 (Option 5)	5
1.200 000 001		10 (Option 4) 10 (Option 5)	5
1.900 000 001		10 (Option 4) 10 (Option 5)	5
5.000 000 001		10	5
14.000 000 001		10	5
22.000 000 001		10	5
28.000 000 001		10	5
34.000 000 001		10	5
41.000 000 001		10[a]	5

a. For MG3695C and MG3697C overshoot > 40 GHz is 20% typical at rated power and is not tested.

MG369xC	Firmware Revision:	Operator:
Serial Number:	Date:	Options:

Section 3-12 Pulse Modulation Tests (+ Opt. 26x or 27)

All MG369xC Models with Option 26x or 27 (2 of 3)

Pulse Power Accuracy (Pulse Width ≥ 1 μs)

DUT Frequency (GHz)	V_{ref} (Volts)	V_{pulse} (Volts)	$P_{accuracy}$ (dB)	Specification (dB)	Measurement Uncertainty (dB)
0.050 000 001				±0.5	0.1
1.200 000 001				±0.5	0.1
1.900 000 001				±0.5	0.1
5.000 000 001				±0.5	0.1
14.000 000 001				±0.5	0.1
22.000 000 001				±0.5	0.1
28.000 000 001				±0.5	0.1
34.000 000 001				±0.5	0.1
41.000 000 001				±0.5	0.1

Pulse Power Accuracy (Pulse Width < 1 μs)

DUT Frequency (GHz)	V_{ref} (Volts)	V_{pulse} (Volts)	$P_{accuracy}$ (dB)	Specification (dB)	Measurement Uncertainty (dB)
2.200 000 001				±1.0	0.1
5.000 000 001				±1.0	0.1
14.000 000 001				±1.0	0.1
22.000 000 001				±1.0	0.1
28.000 000 001				±1.0	0.1
34.000 000 001				±1.0	0.1
41.000 000 001				±1.0	0.1

MG369xC	Firmware Revision:	Operator:
Serial Number:	Date:	Options:

Section 3-12 Pulse Modulation Tests (+ Opt. 26x or 27)

All MG369xC Models with Option 26x or 27 (3 of 3)

All tests use Armored cable P/N 3670K50-2 and adapter P/N 11904D with the exception of the MG3695C which uses P/N 3670V50A-2 and adapter P/N PE9673.

Pulse On/Off Ratio

DUT Frequency (GHz)	P_{depth} (dB)	Offset Value (dB) (See Section A-3)	Final Value (dB)	Specification (dB)[a]	Measurement Uncertainty (dB)
0.010				–80	0.124
1.0				–80	0.124
1.4				–80	0.124
2.0				–80	0.124
2.2				–80	0.124
2.3				–80	0.12
5.0				–80	0.12
8.3				–80	0.12
8.4				–80	0.15
14.0				–80	0.15
20.0				–80	0.15
23.0				–80	0.15
26.5				–80	0.15
30.0				–80	0.15
33.0				–80	0.18
36.0				–80	0.18
40.0[b]				–80	0.18
50.0[b]				–80	0.22

a. For models with Option 15x, specification is 70 dB.

b. Must change RBW and VBW to 300 Hz.

MG369xC	Firmware Revision:	Operator:
Serial Number:	Date:	Options:

Section 5-7 Preliminary Calibration

Procedure Step	Step Completion
1. Internal DVM Calibration (calterm119)	
2. Coarse Loop Pre-tune DAC Calibration (calterm 137)	
3. Sweep Time DAC Calibration (calterm 132)	
4. If Option 6 is Installed then YIG Offset Calibration (calterm 134)	
5. YIG Frequency Linearizer DACs Calibration (calterm 127)	
6. 10 MHz Reference Oscillator Calibration (calterm 130)	
7. Ramp Center DAC Calibration (calterm 129)	
8. Sweep Width DAC Calibration (calterm 133)	
9. Center Frequency DAC Calibration (calterm 114)	
10. Store the Calibration Data (calterm 787)	

MG369xC	Firmware Revision:	Operator:
Serial Number:	Date:	Options:

Section 5-8 Frequency Synthesis Test (1 of 3)

MG3691C	
Coarse Loop[a]	
2.000 000 000 00	
5.000 000 000 00	
8.000 000 000 00	
10.000 000 000 00	
Fine Loop[b]	
2.000 000 100 00	
2.000 000 200 00	
2.000 000 300 00	
2.000 000 400 00	
2.000 000 500 00	
2.000 000 600 00	
2.000 000 700 00	
2.000 000 800 00	
2.000 000 900 00	
2.000 001 000 00	

MG3692C	
Coarse Loop[a]	
2.000 000 000 00	
5.000 000 000 00	
8.000 000 000 00	
11.000 000 000 00	
14.000 000 000 00	
17.000 000 000 00	
20.000 000 000 00	
Fine Loop[b]	
2.000 000 100 00	
2.000 000 200 00	
2.000 000 300 00	
2.000 000 400 00	
2.000 000 500 00	
2.000 000 600 00	
2.000 000 700 00	
2.000 000 800 00	
2.000 000 900 00	
2.000 001 000 00	

a. Tolerance for all frequencies listed above is ±10 Hz. All frequencies are in GHz.

b. Tolerance for all frequencies listed above is ±100 Hz. All frequencies are in GHz.

MG369xC	Firmware Revision:	Operator:
Serial Number:	Date:	Options:

Section 5-8 Frequency Synthesis Test (2 of 3)

MG3693C	
Coarse Loop[a]	
2.000 000 000 00	
5.000 000 000 00	
8.000 000 000 00	
11.000 000 000 00	
14.000 000 000 00	
17.000 000 000 00	
20.000 000 000 00	
23.000 000 000 00	
26.000 000 000 00	
29.000 000 000 00	
30.000 000 000 00	
Fine Loop[b]	
2.000 000 100 00	
2.000 000 200 00	
2.000 000 300 00	
2.000 000 400 00	
2.000 000 500 00	
2.000 000 600 00	
2.000 000 700 00	
2.000 000 800 00	
2.000 000 900 00	
2.000 001 000 00	

MG3694C	
Coarse Loop[a]	
2.000 000 000 00	
5.000 000 000 00	
8.000 000 000 00	
11.000 000 000 00	
14.000 000 000 00	
17.000 000 000 00	
20.000 000 000 00	
23.000 000 000 00	
26.000 000 000 00	
29.000 000 000 00	
32.000 000 000 00	
35.000 000 000 00	
38.000 000 000 00	
40.000 000 000 00	
Fine Loop[b]	
2.000 000 100 00	
2.000 000 200 00	
2.000 000 300 00	
2.000 000 400 00	
2.000 000 500 00	
2.000 000 600 00	
2.000 000 700 00	
2.000 000 800 00	
2.000 000 900 00	
2.000 001 000 00	

a. Tolerance for all frequencies listed above is ±10 Hz. All frequencies are in GHz.

b. Tolerance for all frequencies listed above is ±100 Hz. All frequencies are in GHz.

MG369xC	Firmware Revision:	Operator:
Serial Number:	Date:	Options:

Section 5-8 Frequency Synthesis Test (3 of 3)

MG3695C	
Coarse Loop[a]	
2.000 000 000 00	
5.000 000 000 00	
8.000 000 000 00	
11.000 000 000 00	
14.000 000 000 00	
17.000 000 000 00	
20.000 000 000 00	
23.000 000 000 00	
26.000 000 000 00	
29.000 000 000 00	
32.000 000 000 00	
35.000 000 000 00	
38.000 000 000 00	
40.000 000 000 00	
50.000 000 000 00[3]	
Fine Loop[c]	
2.000 000 100 00	
2.000 000 200 00	
2.000 000 300 00	
2.000 000 400 00	
2.000 000 500 00	
2.000 000 600 00	
2.000 000 700 00	
2.000 000 800 00	
2.000 000 900 00	
2.000 001 000 00	

MG3697C	
Coarse Loop[a]	
2.000 000 000 00*	
5.000 000 000 00	
8.000 000 000 00	
11.000 000 000 00	
14.000 000 000 00	
17.000 000 000 00	
20.000 000 000 00	
23.000 000 000 00	
26.000 000 000 00	
29.000 000 000 00	
32.000 000 000 00	
35.000 000 000 00	
38.000 000 000 00	
40.000 000 000 00	
65.000 000 000 00[b]	
Fine Loop[c]	
2.000 000 100 00	
2.000 000 200 00	
2.000 000 300 00	
2.000 000 400 00	
2.000 000 500 00	
2.000 000 600 00	
2.000 000 700 00	
2.000 000 800 00	
2.000 000 900 00	
2.000 001 000 00	

a. Tolerance for all frequencies listed above is ±10 Hz. All frequencies are in GHz.

b. Only if test equipment capable of taking the measurement is available.

c. Tolerance for all frequencies listed above is ±100 Hz. All frequencies are in GHz.

MG369xC	Firmware Revision:	Operator:
Serial Number:	Date:	Options:

Section 5-9 Switched Filter Shaper Calibration

Procedure Step	Step Completion
Log Amplifier Zero Calibration 1. Log Amplifier Zero Calibration (calterm 115)	
Limiter DAC Adjustment (MG369_B with Option 15) 2. Limiter DAC Adjustment (calterm 145)	
Shaper DAC Adjustment 3. Shaper DAC Adjustment (calterm 138) 4. Store the Calibration Data (calterm 787)	

Section 5-10 RF Level Calibration

This calibration is performed using an automatic test system. Contact Anritsu Customer Service for further information.

Section 5-11 ALC Bandwidth Calibration

Procedure Step	Step Completion
1. ALC Bandwidth Calibration (Calterm 110)	
2. Store the Calibration Data (calterm 787)	

Section 5-12 ALC Slope Calibration

Procedure Step	Step Completion
1. ALC Slope Calibration (slpcal)	
2. Store the Calibration Data (calterm 787)	

MG369xC	Firmware Revision:	Operator:
Serial Number:	Date:	Options:

Section 5-13 AM Calibration

Procedure Step	Step Completion
1. Linear AM Calibration (calterm 112)	
2. Linear AM Calibration SDM (calterm 172)	
3. Log AM Calibration (calterm 113)	
4. Log AM Calibration SDM (calterm 173)	
5. AM Function Generator Calibration (calterm 146)	
6. AM Meter Calibration (calterm 147)	
7. Store the Calibration Data (calterm 787)	

Section 5-14 FM Calibration

Procedure Step	Step Completion
1. FM Variable Gain Linearity Calibration (calterm 148)	
2. FM Narrow Mode Sensitivity Calibration (calterm 125)	
3. ΦM External Wide Sensitivity Calibration (calterm 149)	
4. ΦM External Narrow Sensitivity Calibration (calterm 150)	
5.ΦM Wide Flatness Calibration (calterm 155)	
6. ΦM Narrow Flatness Calibration (calterm 156)	
7. FM Meter Calibration (calterm 123)	
8. FM Function Generator Calibration (calterm 154)	
9. Store the Calibration Data (calterm 787)	

Appendix B — Test Records (Standard Test Equipment)

B-1 Introduction

This appendix provides test records for recording the results of the performance verification tests (Chapter 4) and the calibration procedures (Chapter 5). They jointly provide the means for maintaining an accurate and complete record of instrument performance. Test records are provided for all models of the series MG369xC Synthesized Signal Generators.

Some test records have been customized to cover particular MG369xC models. These test records contain specific references to frequency parameters and power levels that apply only to that instrument model and its available options. When a test record is customized, it is labeled with the specific model and option list for the particular instrument it covers. Test records, which are not customized, do not specify a specific model or option list. These test records are generic and may contain specific references to frequency parameters and power levels that exceed the operational limits of the instrument being tested. When using generic test records, only use the parameters that meet the operational limits of the instrument being tested.

B-2 Uncertainty Specifications

The uncertainty specifications provided in these test records apply only when the manufacturer and model of test equipment (Table 4-1), test setups, calibration and performance verification procedures, and other test guidelines found in this manual are used. For a description of measurement uncertainty, refer to Section 4-6.

B-3 Test Records

We recommend that you make a copy of the test record pages each time a test procedure is performed. By dating each test record copy, a detailed history of the instrument's performance can be accumulated.

MG369xC	Firmware Revision:	Operator:
Serial Number:	Date:	Options:

Section 4-7 Internal Time Base Aging Rate Test (Optional)

All MG369xC Models

	Date and Time	Measured Value	Upper Limit	Measurement Uncertainty
Frequency Error Value			N/A	N/A
Frequency Error Value (after 24 hours)			N/A	N/A
Computed Aging Rate	N/A	_____ per day	$2x10^{-9}$ per day ($5x10^{-10}$ per day with Option 16)	$2x10^{-12}$ per day

MG369xC	Firmware Revision:	Operator:
Serial Number:	Date:	Options:

Section 4-8 Harmonic Testing (Models without Opt. 15)

All MG369xC Models without Option 15 (1 of 2)

Power level: The power level changes based on frequency, model and options installed. Set L1 to the lesser of +10 dBm or to the maximum specified power level.

Refer to Appendix B the Technical Data Sheet, for the maximum specified power levels.

Test Frequency (GHz)	Spectrum Analyzer's Span (MHz)	Spectrum Analyzer's BW/RBW/VBW (kHz)	2nd Harmonic Frequency (GHz)	Measured Value (dBc)	3rd Harmonic Frequency (GHz)	Measured Value (dBc)	1/2 Sub Harmonic (GHz)	Measured Value (dBc)	1/4 Sub Harmonic (GHz)	Measured Value (dBc)	3/4 Sub Harmonic (GHz)	Measured Value (dBc)	Harmonic Related Upper Limit (dBc)	Measurement Uncertainty (dB)
Frequencies: 0.1 Hz to 10 MHz (Models with Option 22 Only)														
0.0001	0.010	1	0.0002		0.0003		N/A		N/A		N/A		–30	2.5
0.00075	0.010	1	0.0015		0.00225		N/A		N/A		N/A		–30	2.5
0.001	0.010	1	0.002		0.00300		N/A		N/A		N/A		–30	2.5
0.009999	0.010	1	0.019998		0.029997		N/A		N/A		N/A		–30	2.5
Frequencies: 10 MHz to ≤ 100 MHz (Models with Option 4 Only)														
0.010	1	10	0.020		0.030		N/A		N/A		N/A		–40	2.5
0.015	1	10	0.030		0.045		N/A		N/A		N/A		–40	2.5
0.060	1	10	0.120		0.180		N/A		N/A		N/A		–40	2.5
0.100	1	10	0.200		0.300		N/A		N/A		N/A		–40	2.5
Frequencies: > 100 MHz to ≤ 2.2 GHz (Models with Option 4 Only)														
0.1001	1	10	0.2002		0.3003		N/A		N/A		N/A		–50	0.8
0.500	1	10	1.000		1.500		N/A		N/A		N/A		–50	0.8
1.500	1	10	3.000		4.500		N/A		N/A		N/A		–50	0.8
2.000	1	10	4.000		6.000		N/A		N/A		N/A		–50	0.8
2.200	1	10	4.400		6.600		N/A		N/A		N/A		–50	0.8
Frequencies: 10 MHz to ≤ 50 MHz (Models with Option 5 Only)														
0.010	1	10	0.020		0.030		N/A		N/A		N/A		–30	2.5
0.015	1	10	0.030		0.045		N/A		N/A		N/A		–30	2.5
0.030	1	10	0.060		0.090		N/A		N/A		N/A		–30	2.5
0.045	1	10	0.090		0.135		N/A		N/A		N/A		–30	2.5
0.050	1	10	0.100		0.150		N/A		N/A		N/A		–30	2.5

MG369xC	Firmware Revision:	Operator:
Serial Number:	Date:	Options:

Section 4-8 Harmonic Testing (Models without Opt. 15)

All MG369xC Models without Option 15 (2 of 2)

Power level: The power level changes based on frequency, model and options installed. Set L1 to the lesser of +10 dBm or to the maximum specified power level.

Refer to Appendix B the Technical Data Sheet, for the maximum specified power levels.

Test Frequency (GHz)	Spectrum Analyzer's Span (MHz)	Spectrum Analyzer's BW/RBW/VBW (kHz)	2nd Harmonic Frequency (GHz)	Measured Value (dBc)	3rd Harmonic Frequency (GHz)	Measured Value (dBc)	1/2 Sub Harmonic (GHz)	Measured Value (dBc)	1/4 Sub Harmonic (GHz)	Measured Value (dBc)	3/4 Sub Harmonic (GHz)	Measured Value (dBc)	Harmonic Related Upper Limit (dBc)	Measurement Uncertainty (dB)
Frequencies: > 50 MHz to < 2 GHz (Models with Option 5 Only)														
0.0501	1	10	0.1002		0.1503		N/A		N/A		N/A		–40	0.8
0.600	1	10	1.200		1.800		N/A		N/A		N/A		–40	0.8
1.500	1	10	3.000		4.500		N/A		N/A		N/A		–40	0.8
1.990	1	10	3.980		5.970		N/A		N/A		N/A		–40	0.8
Frequencies: 2 GHz (>2.2 GHz for Models with Option 4) **to ≤ 20 GHz**														
2.0[a][b]	1	10	4		6		N/A		N/A		N/A		–60	0.8
2.201[b]	1	10	4.402		6.603		N/A		N/A		N/A		–60	0.8
9.99[b]	1	10	19.98		29.97		N/A		N/A		N/A		–60	2.5
10.01[b]	1	10	20.02		30.03		N/A		N/A		N/A		–60	2.5
20.0[b]	1	10	40		N/A		N/A		N/A		N/A		–60	2.5
Frequencies: > 20 GHz to ≤ 50 GHz (MG3693C, MG3694C, and MG3695C Only)														
20.01[b]	1	10	40.02		N/A		10.005		5.0025		15.0075		–40	2.5
25.0[b]	1	10	50		N/A		12.5		6.25		18.75		–40	2.5
30.0[b]	1	10	N/A		N/A		15		7.5		22.5		–40	2.9
40.0[b]	1	10	N/A		N/A		20		10		30		–40	2.4
50.0[b]	1	10	N/A		N/A		25		12.5		37.5		–40	3.0
Frequencies: > 20 GHz to ≤ 70 GHz (MG3697C Only)														
20.01[b]	1	10	40.02		N/A		10.005		5.0025		15.0075		–40	2.5
25.0[b]	1	10	50		N/A		12.5		6.25		18.75		–40	2.5
30.0[b]	1	10	N/A		N/A		15		7.5		22.5		–40	2.9
40.0[b]	1	10	N/A		N/A		20		10		30		–40	2.4
50.0[b]	1	10	N/A		N/A		25		12.5		37.5		–25	3.0

a. Not performed on units with Option 4.

b. Power level may change as the test frequency is increased.

MG369xC	Firmware Revision:	Operator:
Serial Number:	Date:	Options:

Section 4-8 Harmonic Testing (Models with Opt. 15)

All MG369xC Models with Option 15 (1 of 2)

Power level: The power level changes based on frequency, model and options installed. Set L1 to the lesser of +10 dBm or to the maximum specified power level.

Refer to Appendix B the Technical Data Sheet, for the maximum specified power levels.

Test Frequency (GHz)	Spectrum Analyzer's Span (MHz)	Spectrum Analyzer's BW/RBW/VBW (kHz)	2nd Harmonic Frequency (GHz)	Measured Value (dBc)	3rd Harmonic Frequency (GHz)	Measured Value (dBc)	1/2 Sub Harmonic (GHz)	Measured Value (dBc)	1/4 Sub Harmonic (GHz)	Measured Value (dBc)	3/4 Sub Harmonic (GHz)	Measured Value (dBc)	Harmonic Related Upper Limit (dBc)	Measurement Uncertainty (dB)
Frequencies: 0.1 Hz to 10 MHz (Models with Option 22 Only)														
0.0001	10	1	0.0002		0.0003		N/A		N/A		N/A		–30	2.5
0.00075	10	1	0.0015		0.00225		N/A		N/A		N/A		–30	2.5
0.001	10	1	0.0020		0.003		N/A		N/A		N/A		–30	2.5
0.009999	10	1	0.019998		0.029997		N/A		N/A		N/A		–30	2.5
Frequencies: 10 MHz to ≤ 100 MHz (Models with Option 4 Only)														
0.01	1	10	0.020		0.030		N/A		N/A		N/A		–40	2.5
0.015	1	10	0.030		0.045		N/A		N/A		N/A		–40	2.5
0.060	1	10	0.120		0.180		N/A		N/A		N/A		–40	2.5
0.100	1	10	0.200		0.300		N/A		N/A		N/A		–40	2.5
Frequencies: > 100 MHz to ≤ 2.2 GHz (Models with Option 4 Only)														
0.1001	1	10	0.2002		0.3003		N/A		N/A		N/A		–50	0.8
0.500	1	10	1.000		1.500		N/A		N/A		N/A		–50	0.8
1.500	1	10	3.000		4.500		N/A		N/A		N/A		–50	0.8
2.000	1	10	4.000		6.000		N/A		N/A		N/A		–50	0.8
2.200	1	10	4.400		6.600		N/A		N/A		N/A		–50	0.8
Frequencies: 10 MHz to ≤ 50 MHz (Models with Option 5 Only)														
0.010	1	10	0.020		0.030		N/A		N/A		N/A		–30	2.5
0.015	1	10	0.030		0.045		N/A		N/A		N/A		–30	2.5
0.030	1	10	0.060		0.090		N/A		N/A		N/A		–30	2.5
0.045	1	10	0.090		0.135		N/A		N/A		N/A		–30	2.5
0.050	1	10	0.100		0.150		N/A		N/A		N/A		–30	2.5

MG369xC	Firmware Revision:	Operator:
Serial Number:	Date:	Options:

Section 4-8 Harmonic Testing (Models with Opt. 15)

All MG369xC Models with Option 15 (2 of 2)

Power level: The power level changes based on frequency, model and options installed. Set L1 to the lesser of +10 dBm or to the maximum specified power level.

Refer to Appendix B the Technical Data Sheet, for the maximum specified power levels.

Test Frequency (GHz)	Spectrum Analyzer's Span (MHz)	Spectrum Analyzer's BW/RBW/VBW (kHz)	2nd Harmonic Frequency (GHz)	Measured Value (dBc)	3rd Harmonic Frequency (GHz)	Measured Value (dBc)	1/2 Sub Harmonic (GHz)	Measured Value (dBc)	1/4 Sub Harmonic (GHz)	Measured Value (dBc)	3/4 Sub Harmonic (GHz)	Measured Value (dBc)	Harmonic Related Upper Limit (dBc)	Measurement Uncertainty (dB)
Frequencies: > 50 MHz to < 2 GHz (Models with Option 5 Only)														
0.0501	1	10	0.1002		0.1503		N/A		N/A		N/A		–40	0.8
0.600	1	10	1.200		1.800		N/A		N/A		N/A		–40	0.8
1.500	1	10	3.000		4.500		N/A		N/A		N/A		–40	0.8
1.990	1	10	3.980		5.970		N/A		N/A		N/A		–40	0.8
Frequencies: > 40 GHz to ≤ 70 GHz (MG3697C Only)														
50.0[a]	1	10	N/A		N/A		25		12.5		37.5		–25	3.0

a. Power level may change as the test frequency is increased.

MG369xC	Firmware Revision:	Operator:
Serial Number:	Date:	Options:

Section 4-8 Non-Harmonic Testing (Part1)

Part 1 (1 of 3)

MG369xC Frequency (GHz)	MG369xC Output Power Level[(a)]	Spectrum Analyzer Start Frequency (GHz)	Spectrum Analyzer Stop Frequency (GHz)	Spectrum Analyzer RBW (kHz)	Test Result (dBc)	Spec. (dBc)	Measurement Uncertainty
2.650	10dBm	2.649	2.651	30.000		n/a	n/a
2.650	10dBm	2.645	2.649	30.000		-60	2.26
2.650	10dBm	2.595	2.645	100.000		-60	2.34
2.650	10dBm	2.350	2.595	100.000		-60	2.34
2.650	10dBm	2.651	2.655	30.000		-60	2.26
2.650	10dBm	2.655	2.705	100.000		-60	2.34
2.650	10dBm	2.705	2.950	100.000		-60	2.93
2.650	10dBm	2.000	2.350	100.000		-60	2.34
2.650	10dBm	2.950	5.000	100.000		-60	2.93
2.650	10dBm	5.600	7.650	100.000		-60	3.33
2.650	10dBm	8.250	10.300	100.000		-60	3.33
2.650	10dBm	10.900	12.950	100.000		-60	3.33
2.650	10dBm	13.550	16.775	30.000		-60	3.24
2.650	10dBm	16.775	20.000	30.000		-60	3.24
4.400	10dBm	4.399	4.401	30.000		n/a	n/a
4.400	10dBm	4.395	4.399	30.000		-60	2.97
4.400	10dBm	4.345	4.395	100.000		-60	3.02
4.400	10dBm	4.100	4.345	100.000		-60	3.02
4.400	10dBm	4.401	4.405	30.000		-60	2.97
4.400	10dBm	4.405	4.455	100.000		-60	3.02
4.400	10dBm	4.455	4.700	100.000		-60	3.02
4.400	10dBm	2.500	3.000	100.000		-60	2.93
4.400	10dBm	3.600	4.100	100.000		-60	3.02
4.400	10dBm	4.700	8.500	100.000		-60	3.53
4.400	10dBm	9.100	12.900	100.000		-60	3.53
4.400	10dBm	13.500	17.300	30.000		-60	3.46
4.400	10dBm	17.900	20.000	30.000		-60	3.46
6.950	10dBm	6.949	6.951	30.000		n/a	n/a
6.950	10dBm	6.945	6.949	30.000		-60	3.66
6.950	10dBm	6.895	6.945	100.000		-60	3.69
6.950	10dBm	6.650	6.895	100.000		-60	3.69
6.950	10dBm	6.951	6.955	30.000		-60	3.66

MG369xC	Firmware Revision:	Operator:
Serial Number:	Date:	Options:

Section 4-8 Non-Harmonic Testing (Part1)

Part 1 (2 of 3)

MG369xC Frequency (GHz)	MG369xC Output Power Level[a]	Spectrum Analyzer Start Frequency (GHz)	Spectrum Analyzer Stop Frequency (GHz)	Spectrum Analyzer RBW (kHz)	Test Result (dBc)	Spec. (dBc)	Measurement Uncertainty
6.950	10dBm	6.955	7.005	100.000		-60	3.69
6.950	10dBm	7.005	7.250	100.000		-60	3.69
6.950	10dBm	2.000	2.017	100.000		-60	3.33
6.950	10dBm	2.617	3.175	100.000		-60	3.53
6.950	10dBm	3.775	4.913	100.000		-60	3.53
6.950	10dBm	5.513	6.650	100.000		-60	3.69
6.950	10dBm	7.250	10.500	30.000		-60	3.66
6.950	10dBm	10.500	13.600	30.000		-60	3.78
6.950	10dBm	14.200	17.000	30.000		-60	3.75
6.950	10dBm	17.000	20.000	30.000		-60	3.75
10.950	10dBm	10.949	10.951	30.000		n/a	n/a
10.950	10dBm	10.945	10.949	30.000		-60	3.66
10.950	10dBm	10.895	10.945	30.000		-60	3.66
10.950	10dBm	10.650	10.895	30.000		-60	3.66
10.950	10dBm	10.951	10.955	30.000		-60	3.66
10.950	10dBm	10.955	11.005	30.000		-60	3.66
10.950	10dBm	11.005	11.250	30.000		-60	3.66
10.950	10dBm	2.000	3.350	30.000		-60	3.49
10.950	10dBm	3.950	5.175	30.000		-60	3.49
10.950	10dBm	5.775	7.913	30.000		-60	3.49
10.950	10dBm	8.512	10.650	30.000		-60	3.66
10.950	10dBm	11.250	15.500	10.000		-60	3.81
10.950	10dBm	15.500	20.000	10.000		-60	3.78
16.750	10dBm	16.749	16.751	30.000		n/a	n/a
16.750	10dBm	16.745	16.749	30.000		-60	3.59
16.750	10dBm	16.695	16.745	30.000		-60	3.59
16.750	10dBm	16.450	16.695	30.000		-60	3.59
16.750	10dBm	16.751	16.755	30.000		-60	3.59
16.750	10dBm	16.755	16.805	30.000		-60	3.59
16.750	10dBm	16.805	17.050	30.000		-60	3.59
16.750	10dBm	2.000	5.283	30.000		-60	3.46
16.750	10dBm	5.883	8.075	30.000		-60	3.75
16.750	10dBm	8.675	12.263	30.000		-60	3.75

MG369xC	Firmware Revision:	Operator:
Serial Number:	Date:	Options:

Section 4-8 Non-Harmonic Testing (Part1)

Part 1 (3 of 3)

MG369xC Frequency (GHz)	MG369xC Output Power Level[(a)]	Spectrum Analyzer Start Frequency (GHz)	Spectrum Analyzer Stop Frequency (GHz)	Spectrum Analyzer RBW (kHz)	Test Result (dBc)	Spec. (dBc)	Measurement Uncertainty
16.750	10dBm	12.863	16.450	10.000		-60	3.78
16.750	10dBm	17.050	20.000	10.000		-60	3.63

a. All specifications apply at the lesser of +10 dBm output or Maximum specified leveled output power, unless otherwise noted.

MG369xC	Firmware Revision:	Operator:
Serial Number:	Date:	Options:

Section 4-8 Non-Harmonic Testing (Part 2)

Part 2 (1 of 2)

MG369xC Freq. (GHz)	MG369xC Output Power Level[a]	Spectrum Analyzer Center Freq. (GHz)	Spectrum Analyzer Span	Spectrum Analyzer RBW	Test Result (dBc)	Specification (dBc)	Measurement Uncertainty	Exclusions
1.100000[b]	10 dBm	1.100000	1 MHz	10 kHz	n/a	n/a	n/a	
1.100000[b]	10 dBm	1.500000	1 MHz	10 kHz		–60 (opt. 4 units) –40 (opt. 5 units)	2.26	
1.100000[b]	10 dBm	0.500000	1 MHz	10 kHz		–60 (opt. 4 units) –40 (opt. 5 units)	2.26	
1.100000[b]	10 dBm	2.000000	1 MHz	10 kHz		–60 (opt. 4 units) –40 (opt. 5 units)	2.26	
1.100000[b]	10 dBm	6.500000	1 MHz	10 kHz		–60 (opt. 4 units) –40 (opt. 5 units)	2.54	
1.100000[b]	10 dBm	7.600000	1 MHz	10 kHz		–60 (opt. 4 units) –40 (opt. 5 units)	2.54	
20.001000	[c]	20.001000	1 MHz	10 kHz	n/a	n/a	n/a	Test not performed on MG3691C and MG3692C
20.001000	[c]	40.000000	1 MHz	10 kHz		–60	3.92	Test not performed on MG3691C and MG3692C
24.999000	[c]	24.999000	1 MHz	10 kHz	n/a	n/a	n/a	Test not performed on MG3691C and MG3692C
24.999000	[c]	45.800000	1 MHz	10 kHz		–60	3.92	Test not performed on MG3691C and MG3692C
24.999000	[c]	49.667000	1 MHz	10 kHz		–60	3.92	Test not performed on MG3691C and MG3692C
25.001000	[c]	25.001000	1 MHz	10 kHz	n/a	n/a	n/a	Test not performed on MG3691C and MG3692C
25.001000	[c]	49.799800	1 MHz	10 kHz		–60	4.13	Test not performed on MG3691C and MG3692C
31.886891	[c]	31.886891	1 MHz	10 kHz	n/a	n/a	n/a	Test not performed on MG3691C, MG3692C and MG3693C
31.886891	[c]	26.246891	1 MHz	10 kHz		–60	4.13	Test not performed on MG3691C, MG3692C and MG3693C
32.892580	[c]	32.892580	1 MHz	10 kHz	n/a	n/a	n/a	Test not performed on MG3691C, MG3692C and MG3693C

MG369xC	Firmware Revision:	Operator:
Serial Number:	Date:	Options:

Section 4-8 Non-Harmonic Testing (Part 2)

Part 2 (2 of 2)

MG369xC Freq. (GHz)	MG369xC Output Power Level[a]	Spectrum Analyzer Center Freq. (GHz)	Spectrum Analyzer Span	Spectrum Analyzer RBW	Test Result (dBc)	Specification (dBc)	Measurement Uncertainty	Exclusions
32.892580	[c]	28.555738	1 MHz	10 kHz		–60	4.08	Test not performed on MG3691C, MG3692C and MG3693C
39.999000	[c]	39.999000	1 MHz	10 kHz	n/a	n/a	n/a	Test not performed on MG3691C, MG3692C and MG3693C
39.999000	[c]	36.515522	1 MHz	10 kHz		–60	4.01	Test not performed on MG3691C, MG3692C and MG3693C
40.001000	[c]	40.001000	1 MHz	10 kHz	n/a	n/a	n/a	Test not performed on MG3691C, MG3692C, MG3693C and MG3694C
40.001000	[c]	39.935300	1 MHz	10 kHz		–60	4.01	Test not performed on MG3691C, MG3692C, MG3693C and MG3694C
43.634869	[c]	43.634869	1 MHz	10 kHz	n/a	n/a	n/a	Test not performed on MG3691C, MG3692C, MG3693C and MG3694C
43.634869	[c]	43.723037	1 MHz	10 kHz		–60	4.01	Test not performed on MG3691C, MG3692C, MG3693C and MG3694C
49.999000	[c]	49.999000	1 MHz	10 kHz	n/a	n/a	n/a	Test not performed on MG3691C, MG3692C, MG3693C and MG3694C
49.999000	[c]	44.215923	1 MHz	10 kHz		–60	4.04	Test not performed on MG3691C, MG3692C, MG3693C and MG3694C

a. All specifications apply at the lesser of +10 dBm output or Maximum specified leveled output power, unless otherwise noted.

b. Only preformed on units with option 4 or 5 installed.

c. Dependent on maximum leveled power by options and model number, see footnote tables on the following page.

MG369xC	Firmware Revision:	Operator:
Serial Number:	Date:	Options:

Section 4-8 Non-Harmonic Testing (Footnote Reference)

Reference

Footnote C: Table 1, Option 15 not Installed

Units with Option 15 not installed, frequency range from 20 GHz to maximum frequency of model. For output power with Option 22 derate all specifications by 2 dB.

Model	Output Power (dBm)	Output Power with Step Attenuator (opt 2X) installed (dBm)	Output Power with Electronic Step Attenuator (opt 2E) Installed (dBm)
MG3691C	+10	+10	+10
MG3692C	+10	+10	Not available
MG3693C	+6	+3	Not available
MG3694C	+6	+3	Not available
MG3695C	+3	0	Not available
MG3697C	+3	0 (typical 60–67 GHz)	Not available

Footnote C: Table 2, Option 15 Installed

Units with Option 15 installed, frequency range from 20 GHz to maximum frequency of model. For output power with Option 22 derate all specifications by 2 dB.

Model	Freq Range List if Not < 2 GHz to 20 GHz	Notes	Output Power (dBm)	Output Power with Step Attenuator (opt 2X) Installed (dBm)	Output power with Electronic Step Attenuator (opt 2E) Installed (dBm)
MG3691C	< 2 GHz to 10 GHz		+10	+10	+10
MG3692C	< 2 GHz to 20 GHz		+10	+10	N/A
MG3693C	< 2 GHz to 31.8 GHz		+10	+10	Not available
MG3694C	< 2 GHz to 40 GHz		+10	+10	Not available
MG3695C	> 20 GHz to ≤ 40 GHz	w/ opt. 4 or 5	+10	+10	Not available
MG3695C	> 40 GHz to ≤ 50 GHz	w/ opt. 4 or 5	+10	+8	Not available
MG3695C	> 20 GHz to ≤ 50 GHz	w/o opt. 4 or 5	+10	+10	Not available
MG3697C	> 20 GHz to ≤ 40 GHz	w/ opt. 4 or 5	+10	+10	Not available
MG3697C	> 40 GHz to ≤ 67 GHz	w/ opt. 4 or 5	+6	+6	Not available
MG3697C	> 67 GHz to ≤ 70 GHz	w/ opt. 4 or 5	+3 (typical)	0 (typical)	Not available
MG3697C	> 20 GHz to ≤ 40 GHz	w/o opt. 4 or 5	+10	+10	Not available
MG3697C	> 40 GHz to ≤ 67 GHz	w/o opt. 4 or 5	+9	+6 (typical)	Not available
MG3697C	> 67 GHz to ≤ 70 GHz	w/o opt. 4 or 5	+3 (typical)	0 (typical)	Not available

MG369xC	Firmware Revision:	Operator:
Serial Number:	Date:	Options:

Section 4-9 SSB Phase Noise (S/N 103313 and Lower) (No Opt. 3 or 3x)

(For serial numbers 103313 and lower)

All MG369xC Models without Option 3 or 3x (1 of 4)

Frequency Offset	Measured Value (dBc)	Upper Limit (dBc)	Measurement Uncertainty (dB)
Test Frequency: 15 MHz (Models with Option 4 Only)			
10 Hz		–102	4.0
100 Hz		–128	3.0
1 kHz		–142	2.0
10 kHz		–145	2.0
100 kHz		–145	2.0
1 MHz		–145	2.0
Test Frequency: 60 MHz (Models with Option 4 Only)			
10 Hz		–92	4.0
100 Hz		–122	3.0
1 kHz		–140	2.0
10 kHz		–142	2.0
100 kHz		–143	2.0
1 MHz		–145	2.0
Test Frequency: 499 MHz (Models with Option 4 Only)			
10 Hz		–75	4.0
100 Hz		–102	3.0
1 kHz		–120	2.0
10 kHz		–118	2.0
100 kHz		–118	2.0
1 MHz		–143	2.0

MG369xC	Firmware Revision:	Operator:
Serial Number:	Date:	Options:

Section 4-9 SSB Phase Noise (S/N 103313 and Lower) (No Opt. 3 or 3x)

(For serial numbers 103313 and lower)

All MG369xC Models without Option 3 or 3x (2 of 4)

Frequency Offset	Measured Value (dBc)	Upper Limit (dBc)	Measurement Uncertainty (dB)
Test Frequencies: 600 MHz (Models with Option 5 Only)			
10 Hz		–70	4.0
100 Hz		–94	3.0
1 kHz		–115	2.0
10 kHz		–115	2.0
100 kHz		–116	2.0
1 MHz		–138	2.0
Test Frequencies: 1.99 GHz (Models with Option 5 Only)			
10 Hz		–62	4.0
100 Hz		–85	3.0
1 kHz		–100	2.0
10 kHz		–102	2.0
100 kHz		–102	2.0
1 MHz		–111	2.0
Test Frequency: 2.01 GHz (Models without Option 4 Only)			
10 Hz		–65	4.0
100 Hz		–86	3.0
1 kHz		–113	2.0
10 kHz		–111	2.0
100 kHz		–114	2.0
1 MHz		–133	2.0
Test Frequency: 2.19 GHz (Models with Option 4 Only)			
10 Hz		–65	4.0
100 Hz		–86	3.0
1 kHz		–113	2.0
10 kHz		–111	2.0
100 kHz		–114	2.0
1 MHz		–133	2.0

MG369xC	Firmware Revision:	Operator:
Serial Number:	Date:	Options:

Section 4-9 SSB Phase Noise (S/N 103313 and Lower) (No Opt. 3 or 3x)

(For serial numbers 103313 and lower)

All MG369xC Models without Option 3 or 3x (3 of 4)

Frequency Offset	Measured Value (dBc)	Upper Limit (dBc)	Measurement Uncertainty (dB)
Test Frequency: 6.0 GHz			
10 Hz		–54	4.0
100 Hz		–81	3.0
1 kHz		–102	2.0
10 kHz		–103	2.0
100 kHz		–106	2.0
1 MHz		–128	2.0
Test Frequency: 10.0 GHz (8 GHz for MG3691C)			
10 Hz		–52	4.0
100 Hz		–75	3.0
1 kHz		–98	2.0
10 kHz		–104	2.0
100 kHz		–106	2.0
1 MHz		–126	2.0
Test Frequency: 19.99 GHz (not performed on MG3691C)			
10 Hz		–45	4.0
100 Hz		–69	3.0
1 kHz		–92	2.0
10 kHz		–98	2.0
100 kHz		–98	2.0
1 MHz		–124	2.0
Test Frequency: 20.01 GHz (not performed on MG3691C or MG3692C)			
10 Hz		–38	4.0
100 Hz		–62	3.0
1 kHz		–86	2.0
10 kHz		–92	2.0
100 kHz		–92	2.0
1 MHz		–118	2.0

MG369xC	Firmware Revision:	Operator:
Serial Number:	Date:	Options:

Section 4-9 SSB Phase Noise (S/N 103313 and Lower) (No Opt. 3 or 3x)

(For serial numbers 103313 and lower)

All MG369xC Models without Option 3 or 3x (4 of 4)

Frequency Offset	Measured Value (dBc)	Upper Limit (dBc)	Measurement Uncertainty (dB)
Test Frequency: 25.0 GHz (not performed on MG3691C or MG3692C)			
10 Hz		–38	4.0
100 Hz		–62	3.0
1 kHz		–86	2.0
10 kHz		–92	2.0
100 kHz		–92	2.0
1 MHz		–118	2.0

MG369xC	Firmware Revision:	Operator:
Serial Number:	Date:	Options:

Section 4-9 SSB Phase Noise: Power Line & Fan (S/N 103313 and Lower)

(For serial numbers 103313 and lower)

All MG369xC Models without Option 3 or 3x (1 of 2)

Frequency Offset	Measured Value (dBc)	Upper Limit (dBc)	Measurement Uncertainty (dB)
Test Frequency: 15 MHz (Models with Option 4 Only)			
< 300 Hz		–68	4.0
300 Hz to 1 kHz		–72	3.0
> 1 kHz		–72	2.0
Test Frequency: 60 MHz (Models with Options 4 Only)			
< 300 Hz		–68	4.0
300 Hz to 1 kHz		–72	3.0
> 1 kHz		–72	2.0
Test Frequency: 499 MHz (Models with Option 4 Only)			
< 300 Hz		–68	4.0
300 Hz to 1 kHz		–72	3.0
> 1 kHz		–72	2.0
Test Frequencies: 600 MHz (Models with Option 5 Only)			
< 300 Hz		–50	4.0
300 Hz to 1 kHz		–60	3.0
> 1 kHz		–60	2.0
Test Frequencies: 1.99 GHz (Models with Option 5 Only)			
< 300 Hz		–50	4.0
300 Hz to 1 kHz		–60	3.0
> 1 kHz		–60	2.0
Test Frequency: 2.01 GHz (Models without Option 4 Only)			
< 300 Hz		–50	4.0
300 Hz to 1 kHz		–60	3.0
> 1 kHz		–60	2.0

MG369xC	Firmware Revision:	Operator:
Serial Number:	Date:	Options:

Section 4-9 SSB Phase Noise: Power Line & Fan (S/N 103313 and Lower)

(For serial numbers 103313 and lower)

All MG369xC Models without Option 3 or 3x (2 of 2)

Frequency Offset	Measured Value (dBc)	Upper Limit (dBc)	Measurement Uncertainty (dB)
Test Frequency: 2.19 GHz (Models with Option 4 Only)			
< 300 Hz		–56	4.0
300 Hz to 1 kHz		–66	3.0
> 1 kHz		–66	2.0
Test Frequency: 6.0 GHz			
< 300 Hz		–50	4.0
300 Hz to 1 kHz		–60	3.0
> 1 kHz		–60	2.0
Test Frequency: 10.0 GHz (8 GHz for MG3691C)			
< 300 Hz		–46	4.0
300 Hz to 1 kHz		–56	3.0
> 1 kHz		–60	2.0
Test Frequency: 19.99 GHz (not performed on MG3691C)			
< 300 Hz		–46	4.0
300 Hz to 1 kHz		–56	3.0
> 1 kHz		–60	2.0
Test Frequency: 20.01 GHz (not performed on MG3691C or MG3692C)			
< 300 Hz		–40	4.0
300 Hz to 1 kHz		–50	3.0
> 1 kHz		–54	2.0
Test Frequency: 25.0 GHz (not performed on MG3691C or MG3692C)			
< 300 Hz		–40	4.0
300 Hz to 1 kHz		–50	3.0
> 1 kHz		–54	2.0

MG369xC	Firmware Revision:	Operator:
Serial Number:	Date:	Options:

Section 4-9 SSB Phase Noise (S/N 103313 and Lower) (+ Opt. 3)

(For serial numbers 103313 and lower)

All MG369xC Models with Option 3 (1 of 4)

Frequency Offset	Measured Value (dBc)	Upper Limit (dBc)	Measurement Uncertainty (dB)
Test Frequency: 15 MHz (Models with Option 4 Only)			
10 Hz		–102	4.0
100 Hz		–128	3.0
1 kHz		–142	2.0
10 kHz		–145	2.0
100 kHz		–148	2.0
1 MHz		–148	2.0
Test Frequency: 60 MHz (Models with Option 4 Only)			
10 Hz		–92	4.0
100 Hz		–118	3.0
1 kHz		–139	2.0
10 kHz		–145	2.0
100 kHz		–148	2.0
1 MHz		–148	2.0
Test Frequency: 499 MHz (Models with Option 4 Only)			
10 Hz		–77	4.0
100 Hz		–102	3.0
1 kHz		–124	2.0
10 kHz		–132	2.0
100 kHz		–128	2.0
1 MHz		–145	2.0

MG369xC	Firmware Revision:	Operator:
Serial Number:	Date:	Options:

Section 4-9 SSB Phase Noise (S/N 103313 and Lower) (+ Opt. 3)

(For serial numbers 103313 and lower)

All MG369xC Models with Option 3 (2 of 4)

Frequency Offset	Measured Value (dBc)	Upper Limit (dBc)	Measurement Uncertainty (dB)
Test Frequencies: 600 MHz (Models with Option 5 Only)			
10 Hz		–62	4.0
100 Hz		–85	3.0
1 kHz		–100	2.0
10 kHz		–102	2.0
100 kHz		–102	2.0
1 MHz		–111	2.0
Test Frequencies: 1.99 GHz (Models with Option 5 Only)			
10 Hz		–62	4.0
100 Hz		–85	3.0
1 kHz		–100	2.0
10 kHz		–102	2.0
100 kHz		–102	2.0
1 MHz		–111	2.0
Test Frequency: 2.01 GHz (Models without Option 4 Only)			
10 Hz		–54	4.0
100 Hz		–82	3.0
1 kHz		–106	2.0
10 kHz		–115	2.0
100 kHz		–112	2.0
1 MHz		–138	2.0
Test Frequency: 2.19 GHz (Models with Option 4 Only)			
10 Hz		–63	4.0
100 Hz		–92	3.0
1 kHz		–113	2.0
10 kHz		–121	2.0
100 kHz		–117	2.0
1 MHz		–134	2.0

MG369xC	Firmware Revision:	Operator:
Serial Number:	Date:	Options:

Section 4-9 SSB Phase Noise (S/N 103313 and Lower) (+ Opt. 3)

(For serial numbers 103313 and lower)

All MG369xC Models with Option 3 (3 of 4)

Frequency Offset	Measured Value (dBc)	Upper Limit (dBc)	Measurement Uncertainty (dB)
Test Frequency: 6.0 GHz			
10 Hz		–54	4.0
100 Hz		–82	3.0
1 kHz		–106	2.0
10 kHz		–115	2.0
100 kHz		–112	2.0
1 MHz		–138	2.0
Test Frequency: 10.0 GHz (8 GHz for MG3691C)			
10 Hz		–52	4.0
100 Hz		–75	3.0
1 kHz		–102	2.0
10 kHz		–113	2.0
100 kHz		–115	2.0
1 MHz		–134	2.0
Test Frequency: 19.99 GHz (not performed on MG3691C)			
10 Hz		–45	4.0
100 Hz		–69	3.0
1 kHz		–97	2.0
10 kHz		–109	2.0
100 kHz		–109	2.0
1 MHz		–130	2.0
Test Frequency: 20.01 GHz (not performed on MG3691C or MG3692C)			
10 Hz		–38	4.0
100 Hz		–62	3.0
1 kHz		–90	2.0
10 kHz		–104	2.0
100 kHz		–103	2.0
1 MHz		–122	2.0

MG369xC	Firmware Revision:	Operator:
Serial Number:	Date:	Options:

Section 4-9 SSB Phase Noise (S/N 103313 and Lower) (+ Opt. 3)

(For serial numbers 103313 and lower)

All MG369xC Models with Option 3 (4 of 4)

Frequency Offset	Measured Value (dBc)	Upper Limit (dBc)	Measurement Uncertainty (dB)
Test Frequency: 25.0 GHz (not performed on MG3691C or MG3692C)			
10 Hz		–38	4.0
100 Hz		–62	3.0
1 kHz		–90	2.0
10 kHz		–104	2.0
100 kHz		–103	2.0
1 MHz		–122	2.0

MG369xC	Firmware Revision:	Operator:
Serial Number:	Date:	Options:

Section 4-9 SSB Phase Noise: Power Line & Fan (S/N 103313 and Lower) (+ Opt. 3)

(For serial numbers 103313 and lower)

All MG369xC Models with Option 3 (1 of 2)

Frequency Offset	Measured Value (dBc)	Upper Limit (dBc)	Measurement Uncertainty (dB)
Test Frequency: 15 MHz (Models with Options 4 and 3 Only)			
< 300 Hz		–68	4.0
300 Hz to 1 kHz		–72	3.0
> 1 kHz		–72	2.0
Test Frequency: 60 MHz (Models with Options 4 and 3 Only)			
< 300 Hz		–68	4.0
300 Hz to 1 kHz		–72	3.0
> 1 kHz		–72	2.0
Test Frequency: 499 MHz (Models with Option 4 Only)			
< 300 Hz		–68	4.0
300 Hz to 1 kHz		–72	3.0
> 1 kHz		–72	2.0
Test Frequencies: 600 MHz (Models with Option 5 Only)			
< 300 Hz		–50	4.0
300 Hz to 1 kHz		–60	3.0
> 1 kHz		–60	2.0
Test Frequencies: 1.99 GHz (Models with Option 5 Only)			
< 300 Hz		–50	4.0
300 Hz to 1 kHz		–60	3.0
> 1 kHz		–60	2.0
Test Frequency: 2.01 GHz (Models without Option 4 Only)			
< 300 Hz		–50	4.0
300 Hz to 1 kHz		–60	3.0
> 1 kHz		–60	2.0

MG369xC	Firmware Revision:	Operator:
Serial Number:	Date:	Options:

Section 4-9 SSB Phase Noise: Power Line & Fan (S/N 103313 and Lower) (+ Opt. 3)

(For serial numbers 103313 and lower)

All MG369xC Models with Option 3 (2 of 2)

Frequency Offset	Measured Value (dBc)	Upper Limit (dBc)	Measurement Uncertainty (dB)
Test Frequency: 2.19 GHz (Models with Option 4 Only)			
< 300 Hz		–56	4.0
300 Hz to 1 kHz		–66	3.0
> 1 kHz		–66	2.0
Test Frequency: 6.0 GHz			
< 300 Hz		–50	4.0
300 Hz to 1 kHz		–60	3.0
> 1 kHz		–60	2.0
Test Frequency: 10.0 GHz (8 GHz for MG3691C)			
< 300 Hz		–46	4.0
300 Hz to 1 kHz		–56	3.0
> 1 kHz		–60	2.0
Test Frequency: 19.99 GHz (not performed on MG3691C)			
< 300 Hz		–46	4.0
300 Hz to 1 kHz		–56	3.0
> 1 kHz		–60	2.0
Test Frequency: 20.01 GHz (not performed on MG3691C or MG3692C)			
< 300 Hz		–40	4.0
300 Hz to 1 kHz		–50	3.0
> 1 kHz		–54	2.0
Test Frequency: 25.0 GHz (not performed on MG3691C or MG3692C)			
< 300 Hz		–40	4.0
300 Hz to 1 kHz		–50	3.0
> 1 kHz		–54	2.0

MG369xC	Firmware Revision:	Operator:
Serial Number:	Date:	Options:

Section 4-9 SSB Phase Noise (S/N 103313 and Lower) (+ Opt. 3x)

(For serial numbers 103313 and lower)

All MG369xC Models with Option 3x (1 of 4)

Frequency Offset	Measured Value (dBc)	Upper Limit (dBc)	Measurement Uncertainty (dB)
Test Frequency: 15 MHz (Models with Option 4 Only)			
1 Hz		–89	4.0
10 Hz		–111	4.0
100 Hz		–135	3.0
1 kHz		–142	2.0
10 kHz		–145	2.0
100 kHz		–148	2.0
1 MHz		–148	2.0
Test Frequency: 60 MHz (Models with Option 4 Only)			
1 Hz		–80	4.0
10 Hz		–101	4.0
100 Hz		–124	3.0
1 kHz		–139	2.0
10 kHz		–145	2.0
100 kHz		–148	2.0
1 MHz		–148	2.0
Test Frequency: 499 MHz (Models with Option 4 Only)			
1 Hz		–62	4.0
10 Hz		–88	4.0
100 Hz		–105	3.0
1 kHz		–124	2.0
10 kHz		–132	2.0
100 kHz		–128	2.0
1 MHz		–144	2.0

MG369xC	Firmware Revision:	Operator:
Serial Number:	Date:	Options:

Section 4-9 SSB Phase Noise (S/N 103313 and Lower) (+ Opt. 3x)

(For serial numbers 103313 and lower)

All MG369xC Models with Option 3x (2 of 4)

Frequency Offset	Measured Value (dBc)	Upper Limit (dBc)	Measurement Uncertainty (dB)
Test Frequencies: 600 MHz (Models with Option 5 Only)			
1 Hz		–38	4.0
10 Hz		–68	4.0
100 Hz		–85	3.0
1 kHz		–100	2.0
10 kHz		–102	2.0
100 kHz		–102	2.0
1 MHz		–111	2.0
Test Frequencies: 1.99 GHz (Models with Option 5 Only)			
1 Hz		–38	4.0
10 Hz		–68	4.0
100 Hz		–85	3.0
1 kHz		–100	2.0
10 kHz		–102	2.0
100 kHz		–102	2.0
1 MHz		–111	2.0
Test Frequency: 2.01 GHz (Models without Option 4 Only)			
1 Hz		–41	4.0
10 Hz		–65	4.0
100 Hz		–81	3.0
1 kHz		–106	2.0
10 kHz		–115	2.0
100 kHz		–112	2.0
1 MHz		–138	2.0

MG369xC	Firmware Revision:	Operator:
Serial Number:	Date:	Options:

Section 4-9 SSB Phase Noise (S/N 103313 and Lower) (+ Opt. 3x)

(For serial numbers 103313 and lower)

All MG369xC Models with Option 3x (3 of 4)

Frequency Offset	Measured Value (dBc)	Upper Limit (dBc)	Measurement Uncertainty (dB)
Test Frequency: 2.19 GHz (Models with Option 4 Only)			
1 Hz		–49	4.0
10 Hz		–71	4.0
100 Hz		–93	3.0
1 kHz		–113	2.0
10 kHz		–121	2.0
100 kHz		–117	2.0
1 MHz		–134	2.0
Test Frequency: 6.0 GHz			
1 Hz		–41	4.0
10 Hz		–65	4.0
100 Hz		–81	3.0
1 kHz		–106	2.0
10 kHz		–115	2.0
100 kHz		–112	2.0
1 MHz		–138	2.0
Test Frequency: 10.0 GHz (8 GHz for MG3691C)			
1 Hz		–34	4.0
10 Hz		–62	4.0
100 Hz		–83	3.0
1 kHz		–102	2.0
10 kHz		–113	2.0
100 kHz		–115	2.0
1 MHz		–134	2.0

MG369xC	Firmware Revision:	Operator:
Serial Number:	Date:	Options:

Section 4-9 SSB Phase Noise (S/N 103313 and Lower) (+ Opt. 3x)

(For serial numbers 103313 and lower)

All MG369xC Models with Option 3x (4 of 4)

Frequency Offset	Measured Value (dBc)	Upper Limit (dBc)	Measurement Uncertainty (dB)
Test Frequency: 19.99 GHz (not performed on MG3691C)			
1 Hz		–29	4.0
10 Hz		–59	4.0
100 Hz		–77	3.0
1 kHz		–97	2.0
10 kHz		–109	2.0
100 kHz		–109	2.0
1 MHz		–130	2.0
Test Frequency: 20.01 GHz (not performed on MG3691C or MG3692C)			
1 Hz		–23	4.0
10 Hz		–53	4.0
100 Hz		–70	3.0
1 kHz		–90	2.0
10 kHz		–104	2.0
100 kHz		–103	2.0
1 MHz		–122	2.0
Test Frequency: 25.0 GHz (not performed on MG3691C or MG3692C)			
10 Hz		–23	4.0
10 Hz		–53	4.0
100 Hz		–70	3.0
1 kHz		–90	2.0
10 kHz		–104	2.0
100 kHz		–103	2.0
1 MHz		–122	2.0

MG369xC	Firmware Revision:	Operator:
Serial Number:	Date:	Options:

Section 4-9 SSB Phase Noise: Power Line & Fan (S/N 103313 and Lower) (+ Opt. 3x)

(For serial numbers 103313 and lower)

All MG369xC Models with Option 3x (1 of 2)

Frequency Offset	Measured Value (dBc)	Upper Limit (dBc)	Measurement Uncertainty (dB)
Test Frequency: 15 MHz (Models with Options 4 Only)			
< 300 Hz		–68	4.0
300 Hz to 1 kHz		–72	3.0
> 1 kHz		–72	2.0
Test Frequency: 60 MHz (Models with Options 4 Only)			
< 300 Hz		–68	4.0
300 Hz to 1 kHz		–72	3.0
> 1 kHz		–72	2.0
Test Frequency: 499 MHz (Models with Option 4 Only)			
< 300 Hz		–68	4.0
300 Hz to 1 kHz		–72	3.0
> 1 kHz		–72	2.0
Test Frequencies: 600 MHz (Models with Option 5 Only)			
< 300 Hz		–50	4.0
300 Hz to 1 kHz		–60	3.0
> 1 kHz		–60	2.0
Test Frequencies: 1.99 GHz (Models with Option 5 Only)			
< 300 Hz		–50	4.0
300 Hz to 1 kHz		–60	3.0
> 1 kHz		–60	2.0
Test Frequency: 2.01 GHz (Models without Option 4 Only)			
< 300 Hz		–50	4.0
300 Hz to 1 kHz		–60	3.0
> 1 kHz		–60	2.0

MG369xC	Firmware Revision:	Operator:
Serial Number:	Date:	Options:

Section 4-9 SSB Phase Noise: Power Line & Fan (S/N 103313 and Lower) (+ Opt. 3x)

(For serial numbers 103313 and lower)

All MG369xC Models with Option 3x (2 of 2)

Frequency Offset	Measured Value (dBc)	Upper Limit (dBc)	Measurement Uncertainty (dB)
Test Frequency: 2.19 GHz (Models with Option 4 Only)			
< 300 Hz		–56	4.0
300 Hz to 1 kHz		–66	3.0
> 1 kHz		–66	2.0
Test Frequency: 6.0 GHz			
< 300 Hz		–50	4.0
300 Hz to 1 kHz		–60	3.0
> 1 kHz		–60	2.0
Test Frequency: 10.0 GHz (8 GHz for MG3691C)			
< 300 Hz		–46	4.0
300 Hz to 1 kHz		–56	3.0
> 1 kHz		–60	2.0
Test Frequency: 19.99 GHz (not performed on MG3691C)			
< 300 Hz		–46	4.0
300 Hz to 1 kHz		–56	3.0
> 1 kHz		–60	2.0
Test Frequency: 20.01 GHz (not performed on MG3691C or MG3692C)			
< 300 Hz		–40	4.0
300 Hz to 1 kHz		–50	3.0
> 1 kHz		–54	2.0
Test Frequency: 25.0 GHz (not performed on MG3691C or MG3692C)			
< 300 Hz		–40	4.0
300 Hz to 1 kHz		–50	3.0
> 1 kHz		–54	2.0

MG369xC	Firmware Revision:	Operator:
Serial Number:	Date:	Options:

Section 4-9 SSB Phase Noise (S/N 103314 and Higher) (No Opt. 3 or 3x)

(For serial numbers 103314 and higher)

All MG369xC Models without Option 3 or 3x (1 of 4)

Frequency Offset	Measured Value (dBc)	Upper Limit (dBc)	Measurement Uncertainty (dB)
Test Frequency: 15 MHz (Models with Option 4 Only)			
10 Hz		–102	4.0
100 Hz		–128	3.0
1 kHz		–142	2.0
10 kHz		–145	2.0
100 kHz		–145	2.0
1 MHz		–145	2.0
Test Frequency: 60 MHz (Models with Option 4 Only)			
10 Hz		–92	4.0
100 Hz		–122	3.0
1 kHz		–140	2.0
10 kHz		–142	2.0
100 kHz		–143	2.0
1 MHz		–145	2.0
Test Frequency: 499 MHz (Models with Option 4 Only)			
10 Hz		–75	4.0
100 Hz		–102	3.0
1 kHz		–120	2.0
10 kHz		–118	2.0
100 kHz		–118	2.0
1 MHz		–143	2.0

MG369xC	Firmware Revision:	Operator:
Serial Number:	Date:	Options:

Section 4-9 SSB Phase Noise (S/N 103314 and Higher) (No Opt. 3 or 3x)

(For serial numbers 103314 and higher)

All MG369xC Models without Option 3 or 3x (2 of 4)

Frequency Offset	Measured Value (dBc)	Upper Limit (dBc)	Measurement Uncertainty (dB)
Test Frequencies: 600 MHz (Models with Option 5 Only)			
10 Hz		–62	4.0
100 Hz		–85	3.0
1 kHz		–100	2.0
10 kHz		–102	2.0
100 kHz		–102	2.0
1 MHz		–111	2.0
Test Frequencies: 1.99 GHz (Models with Option 5 Only)			
10 Hz		–62	4.0
100 Hz		–85	3.0
1 kHz		–100	2.0
10 kHz		–102	2.0
100 kHz		–102	2.0
1 MHz		–111	2.0
Test Frequency: 2.01 GHz (Models without Option 4 Only)			
10 Hz		–54	4.0
100 Hz		–81	3.0
1 kHz		–102	2.0
10 kHz		–103	2.0
100 kHz		–106	2.0
1 MHz		–128	2.0
Test Frequency: 2.19 GHz (Models with Option 4 Only)			
10 Hz		–65	4.0
100 Hz		–86	3.0
1 kHz		–113	2.0
10 kHz		–111	2.0
100 kHz		–114	2.0
1 MHz		–133	2.0

MG369xC	Firmware Revision:	Operator:
Serial Number:	Date:	Options:

Section 4-9 SSB Phase Noise (S/N 103314 and Higher) (No Opt. 3 or 3x)

(For serial numbers 103314 and higher)

All MG369xC Models without Option 3 or 3x (3 of 4)

Frequency Offset	Measured Value (dBc)	Upper Limit (dBc)	Measurement Uncertainty (dB)
Test Frequency: 6.0 GHz			
10 Hz		–54	4.0
100 Hz		–81	3.0
1 kHz		–102	2.0
10 kHz		–103	2.0
100 kHz		–106	2.0
1 MHz		–128	2.0
Test Frequency: 10.0 GHz (8 GHz for MG3691C)			
10 Hz		–52	4.0
100 Hz		–75	3.0
1 kHz		–98	2.0
10 kHz		–104	2.0
100 kHz		–106	2.0
1 MHz		–126	2.0
Test Frequency: 19.99 GHz (not performed on MG3691C)			
10 Hz		–45	4.0
100 Hz		–69	3.0
1 kHz		–92	2.0
10 kHz		–98	2.0
100 kHz		–98	2.0
1 MHz		–124	2.0
Test Frequency: 20.01 GHz (not performed on MG3691C or MG3692C)			
10 Hz		–38	4.0
100 Hz		–62	3.0
1 kHz		–86	2.0
10 kHz		–92	2.0
100 kHz		–92	2.0
1 MHz		–118	2.0

MG369xC	Firmware Revision:	Operator:
Serial Number:	Date:	Options:

Section 4-9 SSB Phase Noise (S/N 103314 and Higher) (No Opt. 3 or 3x)

(For serial numbers 103314 and higher)

All MG369xC Models without Option 3 or 3x (4 of 4)

Frequency Offset	Measured Value (dBc)	Upper Limit (dBc)	Measurement Uncertainty (dB)
Test Frequency: 25.0 GHz (not performed on MG3691C or MG3692C)			
10 Hz		–38	4.0
100 Hz		–62	3.0
1 kHz		–86	2.0
10 kHz		–92	2.0
100 kHz		–92	2.0
1 MHz		–118	2.0

MG369xC	Firmware Revision:	Operator:
Serial Number:	Date:	Options:

Section 4-9 SSB Phase Noise: Power Line & Fan (S/N 103314 and Higher)

(For serial numbers 103314 and higher)

All MG369xC Models without Option 3 or 3x (1 of 2)

Frequency Offset	Measured Value (dBc)	Upper Limit (dBc)	Measurement Uncertainty (dB)
Test Frequency: 15 MHz (Models with Option 4 Only)			
< 300 Hz		–68	4.0
300 Hz to 1 kHz		–72	3.0
> 1 kHz		–72	2.0
Test Frequency: 60 MHz (Models with Option 4 Only)			
< 300 Hz		–68	4.0
300 Hz to 1 kHz		–72	3.0
> 1 kHz		–72	2.0
Test Frequency: 499 MHz (Models with Option 4 Only)			
< 300 Hz		–68	4.0
300 Hz to 1 kHz		–72	3.0
> 1 kHz		–72	2.0
Test Frequencies: 600 MHz (Models with Option 5 Only)			
< 300 Hz		–50	4.0
300 Hz to 1 kHz		–60	3.0
> 1 kHz		–60	2.0
Test Frequencies: 1.99 GHz (Models with Option 5 Only)			
< 300 Hz		–50	4.0
300 Hz to 1 kHz		–60	3.0
> 1 kHz		–60	2.0
Test Frequency: 2.01 GHz (Models without Option 4 Only)			
< 300 Hz		–50	4.0
300 Hz to 1 kHz		–60	3.0
> 1 kHz		–60	2.0

MG369xC	Firmware Revision:	Operator:
Serial Number:	Date:	Options:

Section 4-9 SSB Phase Noise: Power Line & Fan (S/N 103314 and Higher)

(For serial numbers 103314 and higher)

All MG369xC Models without Option 3 or 3x (2 of 2)

Frequency Offset	Measured Value (dBc)	Upper Limit (dBc)	Measurement Uncertainty (dB)
Test Frequency: 2.19 GHz (Models with Option 4 Only)			
< 300 Hz		–56	4.0
300 Hz to 1 kHz		–66	3.0
> 1 kHz		–66	2.0
Test Frequency: 6.0 GHz			
< 300 Hz		–50	4.0
300 Hz to 1 kHz		–60	3.0
> 1 kHz		–60	2.0
Test Frequency: 10.0 GHz (8 GHz for MG3691C)			
< 300 Hz		–46	4.0
300 Hz to 1 kHz		–56	3.0
> 1 kHz		–60	2.0
Test Frequency: 19.99 GHz (not performed on MG3691C)			
< 300 Hz		–46	4.0
300 Hz to 1 kHz		–56	3.0
> 1 kHz		–60	2.0
Test Frequency: 20.01 GHz (not performed on MG3691C or MG3692C)			
< 300 Hz		–40	4.0
300 Hz to 1 kHz		–50	3.0
> 1 kHz		–54	2.0
Test Frequency: 25.0 GHz (not performed on MG3691C or MG3692C)			
< 300 Hz		–40	4.0
300 Hz to 1 kHz		–50	3.0
> 1 kHz		–54	2.0

MG369xC	Firmware Revision:	Operator:
Serial Number:	Date:	Options:

Section 4-9 SSB Phase Noise (S/N 103314 and Higher) (+ Opt. 3)

(For serial numbers 103314 and higher)

All MG369xC Models with Option 3 (1 of 4)

Frequency Offset	Measured Value (dBc)	Upper Limit (dBc)	Measurement Uncertainty (dB)
Test Frequency: 15 MHz (Models with Option 4 Only)			
10 Hz		–102	4.0
100 Hz		–128	3.0
1 kHz		–142	2.0
10 kHz		–145	2.0
100 kHz		–148	2.0
1 MHz		–148	2.0
Test Frequency: 60 MHz (Models with Option 4 Only)			
10 Hz		–92	4.0
100 Hz		–122	3.0
1 kHz		–140	2.0
10 kHz		–145	2.0
100 kHz		–148	2.0
1 MHz		–148	2.0
Test Frequency: 499 MHz (Models with Option 4 Only)			
10 Hz		–77	4.0
100 Hz		–102	3.0
1 kHz		–124	2.0
10 kHz		–132	2.0
100 kHz		–128	2.0
1 MHz		–145	2.0

MG369xC	Firmware Revision:	Operator:
Serial Number:	Date:	Options:

Section 4-9 SSB Phase Noise (S/N 103314 and Higher) (+ Opt. 3)

(For serial numbers 103314 and higher)

All MG369xC Models with Option 3 (2 of 4)

Frequency Offset	Measured Value (dBc)	Upper Limit (dBc)	Measurement Uncertainty (dB)
Test Frequencies: 600 MHz (Models with Option 5 Only)			
10 Hz		–62	4.0
100 Hz		–85	3.0
1 kHz		–100	2.0
10 kHz		–102	2.0
100 kHz		–102	2.0
1 MHz		–111	2.0
Test Frequencies: 1.99 GHz (Models with Option 5 Only)			
10 Hz		–64	4.0
100 Hz		–85	3.0
1 kHz		–100	2.0
10 kHz		–102	2.0
100 kHz		–102	2.0
1 MHz		–111	2.0
Test Frequency: 2.01 GHz (Models without Option 4 Only)			
10 Hz		–54	4.0
100 Hz		–82	3.0
1 kHz		–106	2.0
10 kHz		–115	2.0
100 kHz		–112	2.0
1 MHz		–138	2.0
Test Frequency: 2.19 GHz (Models with Option 4 Only)			
10 Hz		–66	4.0
100 Hz		–92	3.0
1 kHz		–113	2.0
10 kHz		–121	2.0
100 kHz		–117	2.0
1 MHz		–135	2.0

MG369xC	Firmware Revision:	Operator:
Serial Number:	Date:	Options:

Section 4-9 SSB Phase Noise (S/N 103314 and Higher) (+ Opt. 3)

(For serial numbers 103314 and higher)

All MG369xC Models with Option 3 (3 of 4)

Frequency Offset	Measured Value (dBc)	Upper Limit (dBc)	Measurement Uncertainty (dB)
Test Frequency: 6.0 GHz			
10 Hz		–54	4.0
100 Hz		–82	3.0
1 kHz		–106	2.0
10 kHz		–115	2.0
100 kHz		–112	2.0
1 MHz		–138	2.0
Test Frequency: 10.0 GHz (8 GHz for MG3691C)			
10 Hz		–52	4.0
100 Hz		–75	3.0
1 kHz		–102	2.0
10 kHz		–113	2.0
100 kHz		–115	2.0
1 MHz		–134	2.0
Test Frequency: 19.99 GHz (not performed on MG3691C)			
10 Hz		–52	4.0
100 Hz		–69	3.0
1 kHz		–100	2.0
10 kHz		–109	2.0
100 kHz		–109	2.0
1 MHz		–130	2.0
Test Frequency: 20.01 GHz (not performed on MG3691C or MG3692C)			
10 Hz		–45	4.0
100 Hz		–63	3.0
1 kHz		–94	2.0
10 kHz		–104	2.0
100 kHz		–103	2.0
1 MHz		–122	2.0

MG369xC	Firmware Revision:	Operator:
Serial Number:	Date:	Options:

Section 4-9 SSB Phase Noise (S/N 103314 and Higher) (+ Opt. 3)

(For serial numbers 103314 and higher)

All MG369xC Models with Option 3 (4 of 4)

Frequency Offset	Measured Value (dBc)	Upper Limit (dBc)	Measurement Uncertainty (dB)
Test Frequency: 25.0 GHz (not performed on MG3691C or MG3692C)			
10 Hz		–45	4.0
100 Hz		–63	3.0
1 kHz		–94	2.0
10 kHz		–104	2.0
100 kHz		–103	2.0
1 MHz		–122	2.0

MG369xC	Firmware Revision:	Operator:
Serial Number:	Date:	Options:

Section 4-9 SSB Phase Noise: Power Line & Fan (S/N 103314 and Higher) (+ Opt. 3)

(For serial numbers 103314 and higher)

All MG369xC Models with Option 3 (1 of 2)

Frequency Offset	Measured Value (dBc)	Upper Limit (dBc)	Measurement Uncertainty (dB)
Test Frequency: 15 MHz (Models with Options 4 Only)			
< 300 Hz		–68	4.0
300 Hz to 1 kHz		–72	3.0
> 1 kHz		–72	2.0
Test Frequency: 60 MHz (Models with Options 4 Only)			
< 300 Hz		–68	4.0
300 Hz to 1 kHz		–72	3.0
> 1 kHz		–72	2.0
Test Frequency: 499 MHz (Models with Option 4 Only)			
< 300 Hz		–68	4.0
300 Hz to 1 kHz		–72	3.0
> 1 kHz		–72	2.0
Test Frequencies: 600 MHz (Models with Option 5 Only)			
< 300 Hz		–50	4.0
300 Hz to 1 kHz		–60	3.0
> 1 kHz		–60	2.0
Test Frequencies: 1.99 GHz (Models with Option 5 Only)			
< 300 Hz		–50	4.0
300 Hz to 1 kHz		–60	3.0
> 1 kHz		–60	2.0
Test Frequency: 2.01 GHz (Models without Option 4 Only)			
< 300 Hz		–50	4.0
300 Hz to 1 kHz		–60	3.0
> 1 kHz		–60	2.0

MG369xC	Firmware Revision:	Operator:
Serial Number:	Date:	Options:

Section 4-9 SSB Phase Noise: Power Line & Fan (S/N 103314 and Higher) (+ Opt. 3)

(For serial numbers 103314 and higher)

All MG369xC Models with Option 3 (2 of 2)

Frequency Offset	Measured Value (dBc)	Upper Limit (dBc)	Measurement Uncertainty (dB)
Test Frequency: 2.19 GHz (Models with Option 4 Only)			
< 300 Hz		–56	4.0
300 Hz to 1 kHz		–66	3.0
> 1 kHz		–66	2.0
Test Frequency: 6.0 GHz			
< 300 Hz		–50	4.0
300 Hz to 1 kHz		–60	3.0
> 1 kHz		–60	2.0
Test Frequency: 10.0 GHz (8 GHz for MG3691C)			
< 300 Hz		–46	4.0
300 Hz to 1 kHz		–56	3.0
> 1 kHz		–60	2.0
Test Frequency: 19.99 GHz (not performed on MG3691C)			
< 300 Hz		–46	4.0
300 Hz to 1 kHz		–56	3.0
> 1 kHz		–60	2.0
Test Frequency: 20.01 GHz (not performed on MG3691C or MG3692C)			
< 300 Hz		–40	4.0
300 Hz to 1 kHz		–50	3.0
> 1 kHz		–54	2.0
Test Frequency: 25.0 GHz (not performed on MG3691C or MG3692C)			
< 300 Hz		–40	4.0
300 Hz to 1 kHz		–50	3.0
> 1 kHz		–54	2.0

MG369xC	Firmware Revision:	Operator:
Serial Number:	Date:	Options:

Section 4-9 SSB Phase Noise (S/N 103314 and Higher) (+ Opt. 3x)

(For serial numbers 103314 and higher)

All MG369xC Models with Option 3x (1 of 4)

Frequency Offset	Measured Value (dBc)	Upper Limit (dBc)	Measurement Uncertainty (dB)
Test Frequency: 15 MHz (Models with Option 4 Only)			
1 Hz		–94	4.0
10 Hz		–118	4.0
100 Hz		–136	3.0
1 kHz		–142	2.0
10 kHz		–145	2.0
100 kHz		–148	2.0
1 MHz		–148	2.0
Test Frequency: 60 MHz (Models with Option 4 Only)			
1 Hz		–83	4.0
10 Hz		–109	4.0
100 Hz		–125	3.0
1 kHz		–140	2.0
10 kHz		–145	2.0
100 kHz		–148	2.0
1 MHz		–148	2.0
Test Frequency: 499 MHz (Models with Option 4 Only)			
1 Hz		–67	4.0
10 Hz		–91	4.0
100 Hz		–107	3.0
1 kHz		–124	2.0
10 kHz		–132	2.0
100 kHz		–128	2.0
1 MHz		–144	2.0

MG369xC	Firmware Revision:	Operator:
Serial Number:	Date:	Options:

Section 4-9 SSB Phase Noise (S/N 103314 and Higher) (+ Opt. 3x)

(For serial numbers 103314 and higher)

All MG369xC Models with Option 3x (2 of 4)

Frequency Offset	Measured Value (dBc)	Upper Limit (dBc)	Measurement Uncertainty (dB)
Test Frequencies: 600 MHz (Models with Option 5 Only)			
1 Hz		–38	4.0
10 Hz		–68	4.0
100 Hz		–85	3.0
1 kHz		–100	2.0
10 kHz		–102	2.0
100 kHz		–102	2.0
1 MHz		–111	2.0
Test Frequencies: 1.99 GHz (Models with Option 5 Only)			
1 Hz		–38	4.0
10 Hz		–68	4.0
100 Hz		–85	3.0
1 kHz		–100	2.0
10 kHz		–102	2.0
100 kHz		–102	2.0
1 MHz		–111	2.0
Test Frequency: 2.01 GHz (Models without Option 4 Only)			
1 Hz		–46	4.0
10 Hz		–70	4.0
100 Hz		–86	3.0
1 kHz		–106	2.0
10 kHz		–115	2.0
100 kHz		–112	2.0
1 MHz		–138	2.0

MG369xC	Firmware Revision:	Operator:
Serial Number:	Date:	Options:

Section 4-9 SSB Phase Noise (S/N 103314 and Higher) (+ Opt. 3x)

(For serial numbers 103314 and higher)

All MG369xC Models with Option 3x (3 of 4)

Frequency Offset	Measured Value (dBc)	Upper Limit (dBc)	Measurement Uncertainty (dB)
Test Frequency: 2.19 GHz (Models with Option 4 Only)			
1 Hz		–53	4.0
10 Hz		–77	4.0
100 Hz		–95	3.0
1 kHz		–113	2.0
10 kHz		–121	2.0
100 kHz		–117	2.0
1 MHz		–135	2.0
Test Frequency: 6.0 GHz			
1 Hz		–46	4.0
10 Hz		–70	4.0
100 Hz		–86	3.0
1 kHz		–106	2.0
10 kHz		–115	2.0
100 kHz		–112	2.0
1 MHz		–138	2.0
Test Frequency: 10.0 GHz (8 GHz for MG3691C)			
1 Hz		–38	4.0
10 Hz		–68	4.0
100 Hz		–83	3.0
1 kHz		–102	2.0
10 kHz		–113	2.0
100 kHz		–115	2.0
1 MHz		–134	2.0

MG369xC	Firmware Revision:	Operator:
Serial Number:	Date:	Options:

Section 4-9 SSB Phase Noise (S/N 103314 and Higher) (+ Opt. 3x)

(For serial numbers 103314 and higher)

All MG369xC Models with Option 3x (4 of 4)

Frequency Offset	Measured Value (dBc)	Upper Limit (dBc)	Measurement Uncertainty (dB)
Test Frequency: 19.99 GHz (not performed on MG3691C)			
1 Hz		–35	4.0
10 Hz		–64	4.0
100 Hz		–80	3.0
1 kHz		–100	2.0
10 kHz		–109	2.0
100 kHz		–109	2.0
1 MHz		–130	2.0
Test Frequency: 20.01 GHz (not performed on MG3691C or MG3692C)			
1 Hz		–29	4.0
10 Hz		–58	4.0
100 Hz		–74	3.0
1 kHz		–94	2.0
10 kHz		–104	2.0
100 kHz		–103	2.0
1 MHz		–122	2.0
Test Frequency: 25.0 GHz (not performed on MG3691C or MG3692C)			
10 Hz		–29	4.0
10 Hz		–58	4.0
100 Hz		–74	3.0
1 kHz		–94	2.0
10 kHz		–104	2.0
100 kHz		–103	2.0
1 MHz		–122	2.0

MG369xC	Firmware Revision:	Operator:
Serial Number:	Date:	Options:

Section 4-9 SSB Phase Noise: Power Line & Fan (S/N 103314 and Higher) (+ Opt. 3x)

(For serial numbers 103314 and higher)

All MG369xC Models with Option 3x (1 of 2)

Frequency Offset	Measured Value (dBc)	Upper Limit (dBc)	Measurement Uncertainty (dB)
Test Frequency: 15 MHz (Models with Options 4 Only)			
< 300 Hz		–68	4.0
300 Hz to 1 kHz		–72	3.0
> 1 kHz		–72	2.0
Test Frequency: 60 MHz (Models with Options 4 Only)			
< 300 Hz		–68	4.0
300 Hz to 1 kHz		–72	3.0
> 1 kHz		–72	2.0
Test Frequency: 499 MHz (Models with Option 4 Only)			
< 300 Hz		–68	4.0
300 Hz to 1 kHz		–72	3.0
> 1 kHz		–72	2.0
Test Frequencies: 600 MHz (Models with Option 5 Only)			
< 300 Hz		–50	4.0
300 Hz to 1 kHz		–60	3.0
> 1 kHz		–60	2.0
Test Frequencies: 1.99 GHz (Models with Option 5 Only)			
< 300 Hz		–50	4.0
300 Hz to 1 kHz		–60	3.0
> 1 kHz		–60	2.0
Test Frequency: 2.01 GHz (Models without Option 4 Only)			
< 300 Hz		–50	4.0
300 Hz to 1 kHz		–60	3.0
> 1 kHz		–60	2.0

MG369xC	Firmware Revision:	Operator:
Serial Number:	Date:	Options:

Section 4-9 SSB Phase Noise: Power Line & Fan (S/N 103314 and Higher) (+ Opt. 3x)

(For serial numbers 103314 and higher)

All MG369xC Models with Option 3x (2 of 2)

Frequency Offset	Measured Value (dBc)	Upper Limit (dBc)	Measurement Uncertainty (dB)
Test Frequency: 2.19 GHz (Models with Option 4 Only)			
< 300 Hz		–56	4.0
300 Hz to 1 kHz		–66	3.0
> 1 kHz		–66	2.0
Test Frequency: 6.0 GHz			
< 300 Hz		–50	4.0
300 Hz to 1 kHz		–60	3.0
> 1 kHz		–60	2.0
Test Frequency: 10.0 GHz (8 GHz for MG3691C)			
< 300 Hz		–46	4.0
300 Hz to 1 kHz		–56	3.0
> 1 kHz		–60	2.0
Test Frequency: 19.99 GHz (not performed on MG3691C)			
< 300 Hz		–46	4.0
300 Hz to 1 kHz		–56	3.0
> 1 kHz		–60	2.0
Test Frequency: 20.01 GHz (not performed on MG3691C or MG3692C)			
< 300 Hz		–40	4.0
300 Hz to 1 kHz		–50	3.0
> 1 kHz		–54	2.0
Test Frequency: 25.0 GHz (not performed on MG3691C or MG3692C)			
< 300 Hz		–40	4.0
300 Hz to 1 kHz		–50	3.0
> 1 kHz		–54	2.0

MG369xC	Firmware Revision:	Operator:
Serial Number:	Date:	Options:

Section 4-10 Power Level Log Conformity Test

All MG369xC Models (1 of 2)

Set L1[a]	Set F1 to 2.199 GHz (Option 4) or 1.999 GHz (Option 5) Only		Set F1 to 2.201 GHz (Option 4) or 2.001 GHz (All Others)		Specification (dBm)	Measurement Uncertainty (dB)
	Measured Power Non-pulse Mode (dBm)	Measured Power Pulse Mode (dBm)	Measured Power Non-pulse Mode (dBm)	Measured Power Pulse Mode (dBm)		
+25 dBm[b]					+24 to +26	0.44
+24 dBm[b]					+23 to +25	0.44
+23 dBm[b]					+22 to +24	0.44
+22 dBm[b]					+21 to +23	0.44
+21 dBm[b]					+20 to +22	0.44
+20 dBm[b]					+19 to +21	0.44
+19 dBm					+18 to +20	0.44
+18 dBm					+17 to +19	0.44
+17 dBm					+16 to +18	0.44
+16 dBm					+15 to +17	0.44
+15 dBm					+14 to +16	0.44
+14 dBm					+13 to +15	0.44
+13 dBm					+12 to +14	0.44
+12 dBm					+11 to +13	0.44
+11 dBm					+10 to +12	0.44
+10 dBm					+9 to +11	0.44
+9 dBm					+8 to +10	0.44
+8 dBm					+7 to +9	0.44
+7 dBm					+6 to +8	0.44
+6 dBm					+5 to +7	0.44
+5 dBm					+4 to +6	0.44
+4 dBm					+3 to +5	0.44
+3 dBm					+2 to +4	0.44
+2 dBm					+1 to +3	0.44
+1 dBm					+0 to +2	0.44
+0 dBm					–1 to +1	0.44

MG369xC	Firmware Revision:	Operator:
Serial Number:	Date:	Options:

Section 4-10 Power Level Log Conformity Test

All MG369xC Models (2 of 2)

Set L1[a]	Set F1 to 2.199 GHz (Option 4) or 1.999 GHz (Option 5) Only		Set F1 to 2.201 GHz (Option 4) or 2.001 GHz (All Others)		Specification (dBm)	Measurement Uncertainty (dB)
	Measured Power Non-pulse Mode (dBm)	Measured Power Pulse Mode (dBm)	Measured Power Non-pulse Mode (dBm)	Measured Power Pulse Mode (dBm)		
–1 dBm					–2 to +0	0.44
–2 dBm					–3 to –1	0.44
–3 dBm					–4 to –2	0.44
–4 dBm					–5 to –3	0.44
–5 dBm					–6 to –4	0.44

a. Start with the highest power level within instrument specification.

b. Attenuator is required.

MG369xC	Firmware Revision:	Operator:
Serial Number:	Date:	Options:

Section 4-10 Power Level Accuracy Test (No Opt. 2)

All MG369xC Models without Option 2 (1 of 3)

Set L1[a]	Measured Power (dBm)	Measured Power (dBm)	Measured Power (dBm)	Specification[b] (dBm)	Measurement Uncertainty (dB)
	DUT F1: 10 MHz	**DUT F1: 15 MHz**			
+25 dBm[c]	N/A	N/A	N/A	+23.5 to +26.5	0.44
+20 dBm[c]	N/A	N/A	N/A	+18.5 to +21.5	0.44
+15 dBm			N/A	+13.5 to +16.5	0.44
+10 dBm			N/A	+8.5 to +11.5	0.44
+5 dBm			N/A	+3.5 to +6.5	0.44
+0 dBm			N/A	–1.5 to +1.5	0.44
–5 dBm			N/A	–6.5 to –3.5	0.44
	DUT F1: 60 MHz	**DUT F1: 500 MHz**	**DUT F1: 600 MHz**		
+25 dBm[c]				+24 to +26	0.44
+20 dBm[c]				+19 to +21	0.44
+15 dBm				+14 to +16	0.44
+10 dBm				+9 to +11	0.44
+5 dBm				+4 to +6	0.44
+0 dBm				–1 to +1	0.44
–5 dBm				–6 to –4	0.44
	DUT F1: 2.0 GHz	**DUT F1: 4.0 GHz**	**DUT F1: 6.0 GHz**		
+25 dBm[c]				+24 to +26	0.44
+20 dBm[c]				+19 to +21	0.44
+15 dBm				+14 to +16	0.44
+10 dBm				+9 to +11	0.44
+5 dBm				+4 to +6	0.44
+0 dBm				–1 to +1	0.44
–5 dBm				–6 to –4	0.44
	DUT F1: 8.0 GHz	**DUT F1: 10.0 GHz**	**DUT F1: 12.0 GHz**		
+25 dBm[c]				+24 to +26	0.44
+20 dBm[c]				+19 to +21	0.44
+15 dBm				+14 to +16	0.44
+10 dBm				+9 to +11	0.44

MG369xC	Firmware Revision:	Operator:
Serial Number:	Date:	Options:

Section 4-10 Power Level Accuracy Test (No Opt. 2)

All MG369xC Models without Option 2 (2 of 3)

Set L1[a]	Measured Power (dBm)	Measured Power (dBm)	Measured Power (dBm)	Specification[b] (dBm)	Measurement Uncertainty (dB)
+5 dBm				+4 to +6	0.44
+0 dBm				–1 to +1	0.44
–5 dBm				–6 to –4	0.44
	DUT F1: 14.0 GHz	**DUT F1: 16.0 GHz**	**DUT F1: 18.0 GHz**		
+25 dBm[c]				+24 to +26	0.44
+20 dBm[c]				+19 to +21	0.44
+15 dBm				+14 to +16	0.44
+10 dBm				+9 to +11	0.44
+5 dBm				+4 to +6	0.44
+0 dBm				–1 to +1	0.44
–5 dBm				–6 to –4	0.44
	DUT F1: 20.0 GHz	**DUT F1: 22.0 GHz**	**DUT F1: 24.0 GHz**		
+25 dBm[c]				+24 to +26	0.44
+20 dBm[c]				+19 to +21	0.44
+15 dBm				+14 to +16	0.44
+10 dBm				+9 to +11	0.44
+5 dBm				+4 to +6	0.44
+0 dBm				–1 to +1	0.44
–5 dBm				–6 to –4	0.44
	DUT F1: 26.0 GHz	**DUT F1: 28.0 GHz**	**DUT F1: 30.0 GHz**		
+25 dBm[c]				+24 to +26	0.44
+20 dBm[c]				+19 to +21	0.44
+15 dBm				+14 to +16	0.44
+10 dBm				+9 to +11	0.44
+5 dBm				+4 to +6	0.44
+0 dBm				–1 to +1	0.44
–5 dBm				–6 to –4	0.44
	DUT F1: 32.0 GHz	**DUT F1: 34.0 GHz**	**DUT F1: 36.0 GHz**		
+25 dBm[c]				+24 to +26	0.44
+20 dBm[c]				+19 to +21	0.44

MG369xC	Firmware Revision:	Operator:
Serial Number:	Date:	Options:

Section 4-10 Power Level Accuracy Test (No Opt. 2)

All MG369xC Models without Option 2 (3 of 3)

Set L1[a]	Measured Power (dBm)	Measured Power (dBm)	Measured Power (dBm)	Specification[b] (dBm)	Measurement Uncertainty (dB)
+15 dBm				+14 to +16	0.44
+10 dBm				+9 to +11	0.44
+5 dBm				+4 to +6	0.44
+0 dBm				–1 to +1	0.44
–5 dBm				–6 to –4	0.44
	DUT F1: 38.0 GHz	**DUT F1: 40.0 GHz**			
+25 dBm[c]			N/A	+24 to +26	0.44
+20 dBm[c]			N/A	+19 to +21	0.44
+15 dBm			N/A	+14 to +16	0.44
+10 dBm			N/A	+9 to +11	0.44
+5 dBm			N/A	+4 to +6	0.44
+0 dBm			N/A	–1 to +1	0.44
–5 dBm			N/A	–6 to –4	0.44
	DUT F1: 50.0 GHz	**DUT F1: 60.0 GHz**	**DUT F1: 67.0 GHz**		
+10 dBm		N/A	N/A	+13.5 to +16.5	0.44
+5 dBm				+8.5 to +11.5	0.44
+0 dBm				+3.5 to +6.5	0.44
–5 dBm				–1.5 to +1.5	0.44
–10 dBm				–6.5 to –3.5	0.44

a. Start with the highest power level within instrument specification.

b. Accuracy with high power Option ±15X is 1.5 dBm

c. Attenuator is required to prevent damaging power sensor.

MG369xC	Firmware Revision:	Operator:
Serial Number:	Date:	Options:

Section 4-10 Power Level Accuracy Test (+ Opt. 2)

All MG369xC Models with Option 2 (1 of 11)

Set L1[a]	Measured Power (dBm)	Measured Power (dBm)	Measured Power (dBm)	Specification[b] (dBm)	Measurement Uncertainty (dB)
	DUT F1: 10 MHz Receiver: 10 MHz LO: N/A	DUT F1: 15 MHz Receiver: 15 MHz LO: N/A			
+25 dBm[c]	N/A	N/A		+23.5 to +26.5	0.44
+20 dBm[c]	N/A	N/A		+18.5 to +21.5	0.44
+15 dBm				+13.5 to +16.5	0.44
+10 dBm				+8.5 to +11.5	0.44
+5 dBm				+3.5 to +6.5	0.44
+0 dBm				–1.5 to +1.5	0.44
–5 dBm				–6.5 to –3.5	0.44
–10 dBm				–11.5 to –8.5	0.44
–15 dBm				–16.5 to –13.5	0.44
–20 dBm				–21.5 to –18.5	0.44
–25 dBm				–26.5 to –23.5	0.44
–30 dBm				–31.5 to –28.5	0.44
–35 dBm				–36.5 to –33.5	0.44
–40 dBm				–41.5 to –38.5	0.44
–45 dBm				–46.5 to –43.5	0.44
–50 dBm				–51.5 to –48.5	0.44
–55 dBm				–56.5 to –53.5	0.20
–60 dBm				–61.5 to –58.5	0.20
–65 dBm				–66.5 to –63.5	0.20
–70 dBm				–71.5 to –68.5	0.20
–75 dBm				–76.5 to –73.5	0.20
–80 dBm				–81.5 to –78.5	0.20
–85 dBm				–86.5 to –83.5	0.20
–90 dBm				–91.5 to –88.5	0.20
–95 dBm				–96.5 to –93.5	0.20

MG369xC	Firmware Revision:	Operator:
Serial Number:	Date:	Options:

Section 4-10 Power Level Accuracy Test (+ Opt. 2)

All MG369xC Models with Option 2 (2 of 11)

Set L1[a]	Measured Power (dBm)	Measured Power (dBm)	Measured Power (dBm)	Specification[b] (dBm)	Measurement Uncertainty (dB)
	DUT F1: 60 MHz Receiver: 60 MHz LO: N/A	DUT F1: 500 MHz Receiver: 500 MHz LO: N/A	DUT F1: 600 MHz Receiver: 600 MHz LO: N/A		
+25 dBm[c]				+24 to +26	0.44
+20 dBm[c]				+19 to +21	0.44
+15 dBm				+14 to +16	0.44
+10 dBm				+9 to +11	0.44
+5 dBm				+4 to +6	0.44
+0 dBm				–1 to +1	0.44
–5 dBm				–6 to –4	0.44
–10 dBm				–11 to –9	0.44
–15 dBm				–16 to –14	0.44
–20 dBm				–21 to –19	0.44
–25 dBm				–26 to –24	0.44
–30 dBm				–31 to –29	0.44
–35 dBm				–36 to –34	0.44
–40 dBm				–41 to –39	0.44
–45 dBm				–46 to –44	0.44
–50 dBm				–51 to –49	0.44
–55 dBm				–56 to –54	0.20
–60 dBm				–61 to –59	0.20
–65 dBm				–66 to –64	0.20
–70 dBm				–71 to –69	0.20
–75 dBm				–76 to –74	0.20
–80 dBm				–81 to –79	0.20
–85 dBm				–86 to –84	0.20
–90 dBm				–91 to –89	0.20
–95 dBm				–96 to –94	0.20

MG369xC	Firmware Revision:	Operator:
Serial Number:	Date:	Options:

Section 4-10 Power Level Accuracy Test (+ Opt. 2)

All MG369xC Models with Option 2 (3 of 11)

Set L1[a]	Measured Power (dBm)	Measured Power (dBm)	Measured Power (dBm)	Specification[b] (dBm)	Measurement Uncertainty (dB)
	DUT F1: 1.0 GHz Receiver: 1.0 GHz LO: N/A	DUT F1: 2.0 GHz Receiver: 2.0 GHz LO: N/A			
+25 dBm[c]				+24 to +26	0.44
+20 dBm[c]				+19 to +21	0.44
+15 dBm				+14 to +16	0.44
+10 dBm				+9 to +11	0.44
+5 dBm				+4 to +6	0.44
+0 dBm				–1 to +1	0.44
–5 dBm				–6 to –4	0.44
–10 dBm				–11 to –9	0.44
–15 dBm				–16 to –14	0.44
–20 dBm				–21 to –19	0.44
–25 dBm				–26 to –24	0.44
–30 dBm				–31 to –29	0.44
–35 dBm				–36 to –34	0.44
–40 dBm				–41 to –39	0.44
–45 dBm				–46 to –44	0.44
–50 dBm				–51 to –49	0.44
–55 dBm				–56 to –54	0.20
–60 dBm				–61 to –59	0.20
–65 dBm				–66 to –64	0.20
–70 dBm				–71 to –69	0.20
–75 dBm				–76 to –74	0.20
–80 dBm				–81 to –79	0.20
–85 dBm				–86 to –84	0.20
–90 dBm				–91 to –89	0.20
–95 dBm				–96 to –94	0.20

MG369xC	Firmware Revision:	Operator:
Serial Number:	Date:	Options:

Section 4-10 Power Level Accuracy Test (+ Opt. 2)

All MG369xC Models with Option 2 (4 of 11)

Set L1[a]	Measured Power (dBm)	Measured Power (dBm)	Measured Power (dBm)	Specification[b] (dBm)	Measurement Uncertainty (dB)
			DUT F1: 4.0 GHz Receiver: 8.51 MHz LO: 3991.49 MHz		
+25 dBm[c]				+24 to +26	0.44
+20 dBm[c]				+19 to +21	0.44
+15 dBm				+14 to +16	0.44
+10 dBm				+9 to +11	0.44
+5 dBm				+4 to +6	0.44
+0 dBm				–1 to +1	0.44
–5 dBm				–6 to –4	0.44
–10 dBm				–11 to –9	0.44
–15 dBm				–16 to –14	0.44
–20 dBm				–21 to –19	0.44
–25 dBm				–26 to –24	0.44
–30 dBm				–31 to –29	0.44
–35 dBm				–36 to –34	0.44
–40 dBm				–41 to –39	0.44
–45 dBm				–46 to –44	0.44
–50 dBm				–51 to –49	0.44
–55 dBm				–56 to –54	0.49
–60 dBm				–61 to –59	0.49
–65 dBm				–66 to –64	0.49
–70 dBm				–71 to –69	0.49
–75 dBm				–76 to –74	0.49
–80 dBm				–81 to –79	0.49
–85 dBm				–86 to –84	0.49
–90 dBm				–91 to –89	0.49
–95 dBm				–96 to –94	0.49

MG369xC	Firmware Revision:	Operator:
Serial Number:	Date:	Options:

Section 4-10 Power Level Accuracy Test (+ Opt. 2)

All MG369xC Models with Option 2 (5 of 11)

Set L1[a]	Measured Power (dBm)	Measured Power (dBm)	Measured Power (dBm)	Specification[b] (dBm)	Measurement Uncertainty (dB)
	DUT F1: 6.0 GHz Receiver: 8.51 MHz LO: 5991.49 MHz	DUT F1: 8.0 GHz Receiver: 8.51 MHz LO: 7991.49 MHz	DUT F1: 10.0 GHz Receiver: 8.51 MHz LO: 9991.49 MHz		
+25 dBm[c]				+24 to +26	0.44
+20 dBm[c]				+19 to +21	0.44
+15 dBm				+14 to +16	0.44
+10 dBm				+9 to +11	0.44
+5 dBm				+4 to +6	0.44
+0 dBm				–1 to +1	0.44
–5 dBm				–6 to –4	0.44
–10 dBm				–11 to –9	0.44
–15 dBm				–16 to –14	0.44
–20 dBm				–21 to –19	0.44
–25 dBm				–26 to –24	0.44
–30 dBm				–31 to –29	0.44
–35 dBm				–36 to –34	0.44
–40 dBm				–41 to –39	0.44
–45 dBm				–46 to –44	0.44
–50 dBm				–51 to –49	0.44
–55 dBm				–56 to –54	0.49
–60 dBm				–61 to –59	0.49
–65 dBm				–66 to –64	0.49
–70 dBm				–71 to –69	0.49
–75 dBm				–76 to –74	0.49
–80 dBm				–81 to –79	0.49
–85 dBm				–86 to –84	0.49
–90 dBm				–91 to –89	0.49
–95 dBm				–96 to –94	0.49

MG369xC	Firmware Revision:	Operator:
Serial Number:	Date:	Options:

Section 4-10 Power Level Accuracy Test (+ Opt. 2)

All MG369xC Models with Option 2 (6 of 11)

Set L1[a]	Measured Power (dBm)	Measured Power (dBm)	Measured Power (dBm)	Specification[b] (dBm)	Measurement Uncertainty (dB)
	DUT F1: 12.0 GHz Receiver: 8.51 MHz LO: 11991.49 MHz	DUT F1: 14.0 GHz Receiver: 8.51 MHz LO: 13991.49 MHz	DUT F1: 16.0 GHz Receiver: 8.51 MHz LO: 15991.49 MHz		
+25 dBm[c]				+24 to +26	0.44
+20 dBm[c]				+19 to +21	0.44
+15 dBm				+14 to +16	0.44
+10 dBm				+9 to +11	0.44
+5 dBm				+4 to +6	0.44
+0 dBm				–1 to +1	0.44
–5 dBm				–6 to –4	0.44
–10 dBm				–11 to –9	0.44
–15 dBm				–16 to –14	0.44
–20 dBm				–21 to –19	0.44
–25 dBm				–26 to –24	0.44
–30 dBm				–31 to –29	0.44
–35 dBm				–36 to –34	0.44
–40 dBm				–41 to –39	0.44
–45 dBm				–46 to –44	0.44
–50 dBm				–51 to –49	0.44
–55 dBm				–56 to –54	0.49
–60 dBm				–61 to –59	0.49
–65 dBm				–66 to –64	0.49
–70 dBm				–71 to –69	0.49
–75 dBm				–76 to –74	0.49
–80 dBm				–81 to –79	0.49
–85 dBm				–86 to –84	0.49
–90 dBm				–91 to –89	0.49
–95 dBm				–96 to –94	0.49

MG369xC	Firmware Revision:	Operator:
Serial Number:	Date:	Options:

Section 4-10 Power Level Accuracy Test (+ Opt. 2)

All MG369xC Models with Option 2 (7 of 11)

Set L1[a]	Measured Power (dBm)	Measured Power (dBm)	Measured Power (dBm)	Specification[b] (dBm)	Measurement Uncertainty (dB)
	DUT F1: 18.0 GHz Receiver: 8.51 MHz LO: 17991.49 MHz	DUT F1: 20.0 GHz Receiver: 8.51 MHz LO: 19991.49 MHz	DUT F1: 22.0 GHz Receiver: 8.51 MHz LO: 21991.49 MHz		
+25 dBm[c]				+24 to +26	0.44
+20 dBm[c]				+19 to +21	0.44
+15 dBm				+14 to +16	0.44
+10 dBm				+9 to +11	0.44
+5 dBm				+4 to +6	0.44
+0 dBm				–1 to +1	0.44
–5 dBm				–6 to –4	0.44
–10 dBm				–11 to –9	0.44
–15 dBm				–16 to –14	0.44
–20 dBm				–21 to –19	0.44
–25 dBm				–26 to –24	0.44
–30 dBm				–31 to –29	0.44
–35 dBm				–36 to –34	0.44
–40 dBm				–41 to –39	0.44
–45 dBm				–46 to –44	0.44
–50 dBm				–51 to –49	0.44
–55 dBm				–56 to –54	0.49
–60 dBm				–61 to –59	0.49
–65 dBm				–66 to –64	0.49
–70 dBm				–71 to –69	0.49
–75 dBm				–76 to –74	0.49
–80 dBm				–81 to –79	0.49
–85 dBm				–86 to –84	0.49
–90 dBm				–91 to –89	0.49
–95 dBm				–96 to –94	0.49

MG369xC	Firmware Revision:	Operator:
Serial Number:	Date:	Options:

Section 4-10 Power Level Accuracy Test (+ Opt. 2)

All MG369xC Models with Option 2 (8 of 11)

Set L1[a]	Measured Power (dBm)	Measured Power (dBm)	Measured Power (dBm)	Specification[b] (dBm)	Measurement Uncertainty (dB)
	DUT F1: 24.0 GHz Receiver: 8.51 MHz LO: 23991.49 MHz	DUT F1: 26.0 GHz Receiver: 8.51 MHz LO: 25991.49 MHz	DUT F1: 28.0 GHz Receiver: 8.51 MHz LO: 27991.49 MHz		
+25 dBm[c]				+24 to +26	0.44
+20 dBm[c]				+19 to +21	0.44
+15 dBm				+14 to +16	0.44
+10 dBm				+9 to +11	0.44
+5 dBm				+4 to +6	0.44
+0 dBm				–1 to +1	0.44
–5 dBm				–6 to –4	0.44
–10 dBm				–11 to –9	0.44
–15 dBm				–16 to –14	0.44
–20 dBm				–21 to –19	0.44
–25 dBm				–26 to –24	0.44
–30 dBm				–31 to –29	0.44
–35 dBm				–36 to –34	0.44
–40 dBm				–41 to –39	0.44
–45 dBm				–46 to –44	0.44
–50 dBm				–51 to –49	0.44
–55 dBm				–56 to –54	0.49
–60 dBm				–61 to –59	0.49
–65 dBm				–66 to –64	0.49
–70 dBm				–71 to –69	0.49
–75 dBm				–76 to –74	0.49
–80 dBm				–81 to –79	0.49
–85 dBm				–86 to –84	0.49
–90 dBm				–91 to –89	0.49
–95 dBm				–96 to –94	0.49

MG369xC	Firmware Revision:	Operator:
Serial Number:	Date:	Options:

Section 4-10 Power Level Accuracy Test (+ Opt. 2)

All MG369xC Models with Option 2 (9 of 11)

Set L1[a]	Measured Power (dBm)	Measured Power (dBm)	Measured Power (dBm)	Specification[b] (dBm)	Measurement Uncertainty (dB)
	DUT F1: 30.0 GHz Receiver: 8.51 MHz LO: 29991.49 MHz	DUT F1: 32.0 GHz Receiver: 8.51 MHz LO: 31991.49 MHz	DUT F1: 34.0 GHz Receiver: 8.51 MHz LO: 33991.49 MHz		
+25 dBm[c]				+24 to +26	0.44
+20 dBm[c]				+19 to +21	0.44
+15 dBm				+14 to +16	0.44
+10 dBm				+9 to +11	0.44
+5 dBm				+4 to +6	0.44
+0 dBm				–1 to +1	0.44
–5 dBm				–6 to –4	0.44
–10 dBm				–11 to –9	0.44
–15 dBm				–16 to –14	0.44
–20 dBm				–21 to –19	0.44
–25 dBm				–26 to –24	0.44
–30 dBm				–31 to –29	0.44
–35 dBm				–36 to –34	0.44
–40 dBm				–41 to –39	0.44
–45 dBm				–46 to –44	0.44
–50 dBm				–51 to –49	0.44
–55 dBm				–56 to –54	0.49
–60 dBm				–61 to –59	0.49
–65 dBm				–66 to –64	0.49
–70 dBm				–71 to –69	0.49
–75 dBm				–76 to –74	0.49
–80 dBm				–81 to –79	0.49
–85 dBm				–86 to –84	0.49
–90 dBm				–91 to –89	0.49
–95 dBm				–96 to –94	0.49

MG369xC	Firmware Revision:	Operator:
Serial Number:	Date:	Options:

Section 4-10 Power Level Accuracy Test (+ Opt. 2)

All MG369xC Models with Option 2 (10 of 11)

Set L1[a]	Measured Power (dBm)	Measured Power (dBm)	Measured Power (dBm)	Specification[b] (dBm)	Measurement Uncertainty (dB)
	DUT F1: 36.0 GHz Receiver: 8.51 MHz LO: 35991.49 MHz	DUT F1: 38.0 GHz Receiver: 8.51 MHz LO: 37991.49 MHz	DUT F1: 40.0 GHz Receiver: 8.51 MHz LO: 39991.49 MHz		
+25 dBm[c]				+24 to +26	0.44
+20 dBm[c]				+19 to +21	0.44
+15 dBm				+14 to +16	0.44
+10 dBm				+9 to +11	0.44
+5 dBm				+4 to +6	0.44
+0 dBm				–1 to +1	0.44
–5 dBm				–6 to –4	0.44
–10 dBm				–11 to –9	0.44
–15 dBm				–16 to –14	0.44
–20 dBm				–21 to –19	0.44
–25 dBm				–26 to –24	0.44
–30 dBm				–31 to –29	0.44
–35 dBm				–36 to –34	0.44
–40 dBm				–41 to –39	0.44
–45 dBm				–46 to –44	0.44
–50 dBm				–51 to –49	0.44
–55 dBm				–56 to –54	0.49
–60 dBm				–61 to –59	0.49
–65 dBm				–66 to –64	0.49
–70 dBm				–71 to –69	0.49
–75 dBm				–76 to –74	0.49
–80 dBm				–81 to –79	0.49
–85 dBm				–86 to –84	0.49
–90 dBm				–91 to –89	0.49
–95 dBm				–96 to –94	0.49

MG369xC	Firmware Revision:	Operator:
Serial Number:	Date:	Options:

Section 4-10 Power Level Accuracy Test (+ Opt. 2)

All MG369xC Models with Option 2 (11 of 11)

Set L1[a]	Measured Power (dBm)	Measured Power (dBm)	Measured Power (dBm)	Specification[b] (dBm)	Measurement Uncertainty (dB)
	DUT F1: 50.0 GHz[d] Receiver: N/A LO: N/A	DUT F1: 60.0Hz[d] Receiver: N/A LO: N/A	DUT F1: 67.0 GHz[d] Receiver: N/A LO: N/A		
+10 dBm		N/A	N/A	+8.5 to +11.5	0.44
+5 dBm				+3.5 to +6.5	0.44
+0 dBm				–1.5 to +1.5	0.44
–5 dBm				–6.5 to –3.5	0.44
–10 dBm				–11.5 to –8.5	0.44
–15 dBm				–16.5 to –13.5	0.44
–20 dBm				–21.5 to –18.5	0.44
–25 dBm				–26.5 to –23.5	0.44
–30 dBm		N/A	N/A	–31.5 to –28.5	0.44
–35 dBm		N/A	N/A	–36.5 to –33.5	0.44
–40 dBm		N/A	N/A	–41.5 to –38.5	0.44
–45 dBm		N/A	N/A	–46.5 to –43.5	0.44
–50 dBm		N/A	N/A	–51.5 to –48.5	0.44
–55 dBm		N/A	N/A	–56.5 to –53.5	0.44
–60 dBm		N/A	N/A	–61.5 to –58.5	0.44

a. Start with the highest power level within instrument specification.

b. Accuracy with high power Option 15X is ± 1.5 dBm.

c. Attenuator is required to prevent damaging power sensor.

d. These measurements use the power meter and power sensor only.

MG369xC	Firmware Revision:	Operator:
Serial Number:	Date:	Options:

Section 4-10 Power Level Flatness Test (No Opt. 2)

All MG369xC Models without Option 2 (1 of 2)

MG3691C and MG3692C

Set L1 to +17 dBm (for models with Option 22, set L1 to +15 dBm)

Frequency Range	Power Sensor	# of steps	Maximum Power (dBm)	Minimum Power (dBm)	Variation (Max – Min) (dB)	Variation Spec. (dB)	Measurement Uncertainty (dB)
Minimum Frequency[a] to < 20 MHz (no Opt. 15x)[b]	SC7400	5				3.00	0.289
20 MHz to 50 MHz (no Option 15x)[2]	SC7400	5				1.60	0.281
50 MHz[c] to Maximum Frequency (no Option 15x)	MA2474D	190				1.60	0.539
Minimum Frequency[a] to 50 MHz (with Opt. 15x)[b]	SC7400	10				3.00	0.281
50 MHz[c] to Maximum Frequency (with Opt. 15x)	MA2474D	190				3.00	0.539

a. 100K if Option 22 installed or 10 MHz if Options 4 or 5 installed.

b. Perform test only if Option 4 or 5 installed.

c. 50 MHz if Option 4 or 5 installed otherwise 2 GHz.

MG3693C and MG3694C

Set L1 to +6 dBm (for models with Option 22, set L1 to +4 dBm)

Frequency Range	Power Sensor	# of Steps	Maximum Power (dBm)	Minimum Power (dBm)	Variation (Max – Min) (dB)	Variation Spec. (dB)	Measurement Uncertainty (dB)
Minimum frequency[a] to < 20 MHz (no Opt. 15x)[b]	SC7400	5				3.00	0.289
20 MHz to 50 MHz (no Option 15x)[2]	SC7400	5				1.60	0.281
50 MHz[c] to Maximum Frequency (no Option 15x)	MA2474D	190				1.60	0.736
Minimum Frequency[a] to 50 MHz (with Opt. 15x)[b]	SC7400	10				3.00	0.281
50 MHz[c] to Maximum Frequency (with Opt. 15x)	MA2474D	190				3.00	0.736

a. 100K if Option 22 installed or 10 MHz if Options 4 or 5 installed.

b. Perform test only if Option 4 or 5 installed.

c. 50 MHz if Option 4 or 5 installed otherwise 2 GHz.

MG369xC	Firmware Revision:	Operator:
Serial Number:	Date:	Options:

Section 4-10 Power Level Flatness Test

All MG369xC Models without Option 2 (2 of 2)

MG3695C - Set L1 to +3 dBm (for models with Option 22, set L1 to +1 dBm)

Frequency Range	Power Sensor	# of Steps	Maximum Power (dBm)	Minimum Power (dBm)	Variation (Max – Min) (dB)	Variation Spec. (dB)	Measurement Uncertainty (dB)
Minimum frequency[a] to < 20 MHz (no Opt. 15x)[b]	SC7400	5				3.00	0.289
20 MHz to 50 MHz (no Option 15x)[b]	SC7400	5				1.60	0.281
50 MHz[c] to ≤ 40 GHz (no Option 15x)	SC7430 or SC7570[d]	140				1.60	0.584
40 GHz to 50GHz (no Option 15x)	SC7430 or SC7570[d]	50				2.20	0.788
Minimum Frequency[a] to 50 MHz (with Opt. 15x)[b]	SC7400	10				3.00	0.281
50 MHz[c] to Maximum Frequency (with Opt. 15x)	SC7430 or SC7570[d]	190				3.00	0.788

a. 100K if Option 22 installed or 10 MHz if Options 4 or 5 installed.

b. Perform test only if Option 4 or 5 installed.

c. 50 MHz if Option 4 or 5 installed otherwise 2 GHz.

d. The MA2475D power sensor can be substituted. However, the uncertainty numbers would have to be recalculated by the user.

MG3697C - Set L1 to +3 dBm (for models with Option 22, set L1 to +1 dBm)

Frequency Range	Power Sensor	# of Steps	Maximum Power (dBm)	Minimum Power (dBm)	Variation (Max – Min) (dB)	Variation Spec. (dB)	Measurement Uncertainty (dB)
Minimum frequency[a] to < 20 MHz (no Opt. 15x)[b]	SC7400	5				3.00	0.289
20 MHz to 50 MHz (no Option 15x) [2]	SC7400	5				1.60	0.281
50 MHz[c] to ≤ 40 GHz (no Option 15x)	SC7430 or SC7570	140				1.60	0.584
40 GHz to Maximum Frequency (no Option 15x)	SC7430 or SC7570	50				2.20	1.716
Minimum Frequency[1] to 50 MHz (with Option 15x)	SC7400	10				3.00	0.281
50 MHz[3] to Maximum Frequency (with Opt. 15x)	SC7430 or SC7570	190				3.00	1.716

a. 100K if Option 22 installed or 10 MHz if Options 4 or 5 installed.

b. Perform test only if Option 4 or 5 installed.

c. 50 MHz if Option 4 or 5 installed otherwise 2 GHz.

MG369xC	Firmware Revision:	Operator:
Serial Number:	Date:	Options:

Section 4-10 Power Level Flatness Test

All MG369xC Models with Option 2 (1 of 2)

MG3691C and MG3692C

Set L1 to +15 dBm (for models with Option 2E or 22, set L1 to +13 dBm; for models with Option 2E and 22, set L1 to +11 dBm.)

Frequency Range	Power Sensor	# of Steps	Maximum Power (dBm)	Minimum Power (dBm)	Variation (Max – Min) (dB)	Variation Spec. (dB)	Measurement Uncertainty (dB)
Minimum Frequency[a] to < 20 MHz (no Opt. 15x)[b]	SC7400	5				3.00	0.289
20 MHz to 50 MHz (no Option 15x) [b]	SC7400	5				1.60	0.281
50 MHz[c] to Maximum Frequency (no Option 15x)	MA2474D	190				1.60	0.539
Minimum Frequency[a] to 50 MHz (with Opt. 15x)[b]	SC7400	10				3.00	0.281
50 MHz[c] to Maximum Frequency (with Opt. 15x)	MA2474D	190				3.00	0.539

a. 100K if Option 22 installed or 10 MHz if Options 4 or 5 installed.

b. Perform test only if Option 4 or 5 installed.

c. 50 MHz if Option 4 or 5 installed otherwise 2GHz.

MG3693C and MG3694C

Set L1 to +3 dBm (for models with Option 22, set L1 to +1 dBm)

Frequency Range	Power Sensor	# of Steps	Maximum Power (dBm)	Minimum Power (dBm)	Variation (Max – Min) (dB)	Variation Spec. (dB)	Measurement Uncertainty (dB)
Minimum frequency[a] to < 20 MHz (no Opt. 15x)[b]	SC7400	5				3.00	0.289
20 MHz to 50 MHz (no Option 15x)[b]	SC7400	5				1.60	0.281
50 MHz[c] to Maximum Frequency (no Option 15x)	MA2474D	190				1.60	0.736
Minimum Frequency[a] to 50 MHz (with Opt. 15x)[b]	SC7400	10				3.00	0.281
50 MHz[c] to Maximum Frequency (with Opt. 15x)	MA2474D	190				3.00	0.736

a. 100K if Option 22 installed or 10 MHz if Options 4 or 5 installed.

b. Perform test only if Option 4 or 5 installed.

c. 50 MHz if Option 4 or 5 installed otherwise 2GHz.

MG369xC	Firmware Revision:	Operator:
Serial Number:	Date:	Options:

Section 4-10 Power Level Flatness Test

All MG369xC Models with Option 2 (2 of 2)

MG3695C - Set L1 to +0 dBm (for models with Option 22, set L1 to -2 dBm.)

Frequency Range	Power Sensor	# of Steps	Maximum Power (dBm)	Minimum Power (dBm)	Variation (Max – Min) (dB)	Variation Spec. (dB)	Measurement Uncertainty (dB)
Minimum frequency[a] to < 20 MHz (no Opt. 15x)[b]	SC7400	5				3.00	0.290
20 MHz to 50 MHz (no Option 15x)[b]	SC7400	5				1.60	0.282
50 MHz[c] to ≤ 40 GHz (no Option 15x)	SC7430 or SC7570[d]	140				1.60	0.584
40 GHz to 50GHz (no Option 15x)	SC7430 or SC7570[d]	50				2.20	0.788
Minimum Frequency[a] to 50 MHz (with Opt. 15x)[b]	SC7400	10				3.00	0.282
50 MHz[c] to Maximum Frequency (with Opt. 15x)	SC7430 or SC7570[d]	190				3.00	0.788

a. 100K if Option 22 installed or 10 MHz if Options 4 or 5 installed.

b. Perform test only if Option 4 or 5 installed.

c. 50 MHz if Option 4 or 5 installed otherwise 2GHz.

d. The MA2475D power sensor can be substituted. However, the uncertainty numbers would have to be recalculated by the user.

MG3697C - Set L1 to +0 dBm (for models with Option 22, set L1 to -2 dBm.)

Frequency Range	Power Sensor	# of Steps	Maximum Power (dBm)	Minimum Power (dBm)	Variation (Max – Min) (dB)	Variation Spec. (dB)	Measurement Uncertainty (dB)
Minimum frequency[a] to < 20 MHz (no Opt. 15x)[b]	SC7400	5				3.00	0.290
20 MHz to 50 MHz (no Option 15x)[b]	SC7400	5				1.60	0.282
50 MHz[c] to ≤ 40 GHz (no Option 15x)	SC7430 or SC7570	4				1.60	0.584
40 GHz to Maximum Frequency (no Option 15x)	SC7430 or SC7570	50				2.20	1.716
Minimum Frequency[a] to 50 MHz (with Option 15x)	SC7400	10				3.00	0.282
50 MHz[c] to Maximum Frequency (with Opt. 15x)	SC7430 or SC7570	190				3.00	1.716

a. 100K if Option 22 installed or 10 MHz if Options 4 or 5 installed.

b. Perform test only if Option 4 or 5 installed.

c. 50 MHz if Option 4 or 5 installed otherwise 2GHz.

MG369xC	Firmware Revision:	Operator:
Serial Number:	Date:	Options:

Section 4-10 Maximum Leveled Power Test

All MG369xC Models without Option 15 (1 of 2)

MG3691C

Set L1 to +20 dBm

Frequency Range (GHz)	Power Sensor	# of Steps	Minimum Measured Power (dBm)	Specification w/out Option 2 (dBm)[a]	Specification with Option 2 (dBm)[a]	Specification with Option 2E (dBm)[a]	Measurement Uncertainty (dB)
Minimum Frequency[b] to < 2.0 w/Option 5 ≤ 2.2 w/Option 4	SC7400	50		+19.0	+18.0	+15.0	0.268
≥ 2.0 to 10 w/Option 5 > 2.2 to 10 w/Option 4 to Maximum Frequency	SC7400	150		+19.0	+18.0	+13.0	0.269

a. For models with Option 22, derate specification by 2 dB.

b. 100K if Option 22 installed, 10 MHz if Options 4 or 5 is installed or 2.0 GHz if options 4, 5 or 22 are not installed.

MG3692C

Set L1 to +20 dBm

Frequency Range (GHz)	Power Sensor	# of Steps	Minimum Measured Power (dBm)	Specification w/out Option 2 (dBm)[a]	Specification with Option 2 (dBm)[a]	Measurement Uncertainty (dB)
Minimum Frequency[b] to ≤ 10.0	SC7400	100		+19.0	+18.0	0.269
> 10.0 to ≤ 20.0	MA2474D	100		+17.0	+15.0	0.539

a. For models with Option 22, derate specification by 2 dB.

b. 100K if Option 22 installed, 10 MHz if Options 4 or 5 is installed or 2.0 GHz if options 4, 5 or 22 are not installed.

MG3693C or MG3694C

Set L1 to +20 dBm

Frequency Range (GHz)	Power Sensor	# of Steps	Minimum Measured Power (dBm)	Specification w/out Option 2 (dBm)[a]	Specification with Option 2 (dBm)[a]	Measurement Uncertainty (dB)
Minimum Frequency[b] to ≤ 10.0	SC7400	50		+15.0	+14.0	0.269
> 10.0 to ≤ 20.0	MA2474D	50		+12.0	+10.0	0.539
> 20.0 to ≤ 40.0[c]	MA2474D	100		+9.0	+6.0	0.736

a. For models with Option 22, derate specification by 2 dB

b.100K if Option 22 installed, 10 MHz if Options 4 or 5 is installed or 2.0 GHz if options 4, 5 or 22 are not installed.

c. Or the maximum frequency within instrument specification.

MG369xC	Firmware Revision:	Operator:
Serial Number:	Date:	Options:

Section 4-10 Maximum Leveled Power Test

All MG369xC Models without Option 15 (2 of 2)

MG3695C or MG3697C

Set L1 to +20 dBm

Frequency Range (GHz)	Power Sensor	# of Steps	Minimum Measured Power (dBm)	Specification w/out Option 2 (dBm)[a]	Specification with Option 2 (dBm)[a]	Measurement Uncertainty (dB)
Minimum Frequency[b] to < 2.0 w/Option 5 ≤ 2.2 w/Option 4	SC7400	20		+12.0	+10.0	0.268
≥ 2.0 to 20 w/Option 5 > 2.2 to 20 w/Option 4	SC7430 or SC7570[c]	60		+10.0	+8.0	0.454
> 20.0 to ≤ 40.0	SC7430 or SC7570[c]	60		+6.0	+3.0	1.716
> 40.0 to ≤ Maximum Frequency[d]	SC7430 or SC7570[c]	60		+3.0	+0.0[e]	1.716

a. For models with Option 22, derate specification by 2 dB

b. 100K if Option 22 installed or 10 MHz if Options 4 or 5 installed.

c. The MA2475D power sensor can be substituted on MG3695C models, however the uncertainty numbers would have to be recalculated by the user.

d. 50 GHz for MG3695C, 67 GHz for MG3697C without option 2 or 60 GHz for MG3697C with option 2.

e. Typical 60-70 GHz.

MG369xC	Firmware Revision:	Operator:
Serial Number:	Date:	Options:

Section 4-10 Maximum Leveled Power Test

All MG369xC Models with Option 15 and without Options 4 or 5 (1 of 2)

MG3691C

Set L1 to +30 dBm

Frequency Range (GHz)	Power Sensor	# of Steps	Minimum Measured Power (dBm)	Specification w/out Option 2 (dBm)[a]	Specification with Option 2 (dBm)[a]	Specification with Option 2E (dBm)[a]	Measurement Uncertainty (dB)
Minimum Frequency[b] to ≤ 10.0	SC7400	200		+26.0	+25.0	+25.0	0.269

a. For models with Option 22, derate specification by 2 dB.

b.100K if Option 22 installed, 10 MHz if Options 4 or 5 installed or 2.0 GHz if options 4, 5 or 22 are not installed.

MG3692C

Set L1 to +30 dBm

Frequency Range (GHz)	Power Sensor	# of Steps	Minimum Measured Power (dBm)	Specification w/out Option 2 (dBm)[a]	Specification with Option 2 (dBm)[a]	Measurement Uncertainty (dB)
Minimum Frequency[b] to ≤ 10.0	SC7400	100		+26.0	+25.0	0.269
10.0 to ≤ 16.0	MA2474D	50		+25.0	+23.0	0.539
>16.0 to ≤ 20.0	MA2474D	50		+23.0	+21.0	0.539

a. For models with Option 22, derate specification by 2 dB.

b.100K if Option 22 installed, 10 MHz if Options 4 or 5 installed or 2.0 GHz if options 4, 5 or 22 are not installed.

MG3693C or MG3694C

Set L1 to +30 dBm

Frequency Range (GHz)	Power Sensor	# of Steps	Minimum Measured Power (dBm)	Specification w/out Option 2 (dBm)[a]	Specification with Option 2 (dBm)[a]	Measurement Uncertainty (dB)
Minimum Frequency[b] to ≤ 10.0	SC7400	50		+23.0	+21.0	0.269
10.0 to ≤ 20.0	MA2474D	50		+23.0	+21.0	0.539
> 20.0 to ≤ 40.0[c]	MA2474D	100		+19.0	+17.0	0.736

a. For models with Option 22, derate specification by 2 dB.

b.100K if Option 22 installed, 10 MHz if Options 4 or 5 installed or 2.0 GHz if options 4, 5 or 22 are not installed.

c. Or the maximum frequency within instrument specification.

MG369xC	Firmware Revision:	Operator:
Serial Number:	Date:	Options:

Section 4-10 Maximum Leveled Power Test

All MG369xC Models with Option 15 and without Options 4 or 5 (2 of 2)

MG3695C

Set L1 to +30 dBm

Frequency Range (GHz)	Power Sensor	# of Steps	Minimum Measured Power (dBm)	Specification w/out Option 2 (dBm)[a]	Specification with Option 2 (dBm)[a]	Measurement Uncertainty (dB)
Minimum Frequency[b] to ≤ 10.0	SC7400	40		+23.0	+21.0	0.269
10.0 to ≤ 20.0	SC7430 or SC7570[c]	40		+23.0	+21.0	0.454
> 20.0 to ≤ 40.0	SC7430 or SC7570[c]	80		+19.0	+17.0	0.584
> 40.0 to ≤ 50.0	SC7430 or SC7570[c]	40		+13.0	+10.0	0.790

a. For models with Option 22, derate specification by 2 dB.

b.100K if Option 22 installed, 10 MHz if Options 4 or 5 installed or 2.0 GHz if options 4, 5 or 22 are not installed.

c. The MA2475D power sensor can be substituted on MG3695C models, however the uncertainty numbers would have to be recalculated by the user.

MG3697C

Set L1 to +30 dB

Frequency Range (GHz)	Power Sensor	# of Steps	Minimum Measured Power (dBm)	Specification w/out Option 2 (dBm)[a]	Specification with Option 2 (dBm)[a]	Measurement Uncertainty (dB)
Minimum Frequency[b] to ≤ 10.0	SC7400	40		+21.0	+19.0	0.269
10.0 to ≤ 20.0	SC7430 or SC7570	40		+21.0	+19.0	0.454
> 20.0 to ≤ 40.0	SC7430 or SC7570	60		+19.0	+16.0	0.584
> 40.0 to ≤ Maximum Frequency[c]	SC7430 or SC7570	60		+9.0	+6.0[d]	1.716

a. For models with Option 22, derate specification by 2 dB.

b.100K if Option 22 installed, 10 MHz if Options 4 or 5 installed or 2.0 GHz if options 4, 5 or 22 are not installed.

c. 67 GHz for MG3697C without option 2 or 60 GHz for MG3697C with option 2.

d. Typical 60 to 70 GHz.

MG369xC	Firmware Revision:	Operator:
Serial Number:	Date:	Options:

Section 4-10 Maximum Leveled Power Test

All MG369xC Models with Option 15 and Option 4 or 5 (1 of 3)

MG3691C

Set L1 to +30 dBm

Frequency Range (GHz)	Power Sensor	# of Steps	Minimum Measured Power (dBm)	Specification w/out Option 2 (dBm)[a]	Specification with Option 2 (dBm)[a]	Specification with Option 2E (dBm)[a]	Measurement Uncertainty (dB)
Minimum Frequency[b] to < 2.0 w/Option 5 ≤ 2.2 w/Option 4	SC7400	50		+19.0	+18.0	+15.0	0.268
≥ 2.0 to 10 w/Option 5 > 2.2 to 10 w/Option 4	SC7400	150		+25.0	+24.0	+16.0	0.237

a. For models with Option 22, derate specification by 2 dB.

b. 100K if Option 22 installed or 10 MHz if Options 4 or 5 installed.

MG3692C

Set L1 to +30 dBm

Frequency Range (GHz)	Power Sensor	# of Steps	Minimum Measured Power (dBm)	Specification w/out Option 2 (dBm)[a]	Specification with Option 2 (dBm)[a]	Measurement Uncertainty (dB)
Minimum Frequency[b] to < 2.0 w/Option 5 ≤ 2.2 w/Option 4	SC7400	25		+19.0	+18.0	0.268
≥ 2.0 to 10 w/Option 5 > 2.2 to 10 w/Option 4	MA2474D	75		+25.0	+24.0	0.539
> 10.0 to 16	MA2474D	50		+22.0	+20.0	0.539
> 16.0 to 20	MA2474D	50		+21.0	+19.0	0.539

a. For models with Option 22, derate specification by 2 dB.

b.100K if Option 22 installed or 10 MHz if Options 4 or 5 installed.

MG369xC	Firmware Revision:	Operator:
Serial Number:	Date:	Options:

Section 4-10 Maximum Leveled Power Test

All MG369xC Models with Option 15 and Options 4 or 5 (2 of 3)

MG3693C

Set L1 to +30 dBm

Frequency Range (GHz)	Power Sensor	# of Steps	Minimum Measured Power (dBm)	Specification w/out Option 2 (dBm)[a]	Specification with Option 2 (dBm)[a]	Measurement Uncertainty (dB)
Minimum Frequency[b] to < 2.0 w/Option 5 ≤ 2.2 w/Option 4	SC7400	25		+17.0	+16.0	0.268
≥ 2.0 to 20 w/Option 5 > 2.2 to 20 w/Option 4	MA2474D	100		+21.0	+19.0	0.539
> 20 to ≤ 31.8	MA2474D	75		+17.0	+15.0	0.546

a. For models with Option 22, derate specification by 2 dB.

b.100K if Option 22 installed or 10 MHz if Options 4 or 5 installed.

MG3694C

Set L1 to +30 dBm

Frequency Range (GHz)	Power Sensor	# of Steps	Minimum Measured Power (dBm)	Specification w/out Option 2 (dBm)[a]	Specification with Option 2 (dBm)[a]	Measurement Uncertainty (dB)
Minimum Frequency[b] to < 2.0 w/Option 5 ≤ 2.2 w/Option 4	SC7400	20		+17.0	+16.0	0.268
≥ 2.0 to 20 w/Option 5 > 2.2 to ≤ 20 w/Option 4	MA2474D	90		+21.0	+19.0	0.539
> 20 to ≤ 40.0	MA2474D	90		+17.0	+15.0	0.539

a. For models with Option 22, derate specification by 2 dB.

b. 100K if Option 22 installed or 10 MHz if Options 4 or 5 installed.

MG369xC	Firmware Revision:	Operator:
Serial Number:	Date:	Options:

Section 4-10 Maximum Leveled Power Test

All MG369xC Models with Option 15 and Options 4 or 5 (3 of 3)

MG3695C

Set L1 to +30 dBm

Frequency Range (GHz)	Power Sensor	# of Steps	Minimum Measured Power (dBm)	Specification w/out Option 2 (dBm)[a]	Specification with Option 2 (dBm)[a]	Measurement Uncertainty (dB)
Minimum Frequency[b] to < 2.0 w/Option 5 ≤ 2.2 w/Option 4	SC7400	10		+16.0	+14.0	0.268
≥ 2.0 to 20 w/Option 5 > 2.2 to 20 w/Option 4	SC7430 or SC7570[c]	75		+21.0	+19.0	0.454
> 20 to ≤ 40.0	SC7430 or SC7570[c]	75		+17.0	+15.0	0.584
< 40 to ≤ 50.0	SC7430 or SC7570[c]	40		+11.0	+8.0	0.794

a. For models with Option 22, derate specification by 2 dB.

b. 100K if Option 22 installed or 10 MHz if Options 4 or 5 installed.

c. The MA2475D power sensor can be substituted on MG3695C models, however the uncertainty numbers would have to be recalculated by the user..

MG3697C

Set L1 to +30 dBm

Frequency Range (GHz)	Power Sensor	# of Steps	Minimum Measured Power (dBm)	Specification w/out Option 2 (dBm)[a]	Specification with Option 2 (dBm)[a]	Measurement Uncertainty (dB)
Minimum Frequency[b] to < 2.0 w/Option 5 ≤ 2.2 w/Option 4	SC7400	10		+16.0	+15.0	0.268
≥ 2.0 to 20 w/Option 5 > 2.2 to 20 w/Option 4	SC7430 or SC7570	50		+19.0	+18.0	0.454
> 20 to ≤ 40.0	SC7430 or SC7570	50		+16.0	+14.0	0.584
> 40 to ≤ Maximum Frequency[c]	SC7430 or SC7570	90		+9.0	+6.0[d]	1.716

a. For models with Option 22, derate specification by 2 dB.

b. 100K if Option 22 installed or 10 MHz if Options 4 or 5 installed..

c. 67 GHz for MG3697C without option 2 or 60 GHz for MG3697C with option 2.

d. Typical 60 to 70 GHz.

MG369xC	Firmware Revision:	Operator:
Serial Number:	Date:	Options:

Section 4-11 Frequency Modulation Tests (+ Opt. 12 or 28x)

All MG369xC Models with Option 12 or 28x (1 of 6)

Locked External FM Accuracy at 5 GHz

Measured Test Results	Specification	Measurement Uncertainty
Vmodon =	N/A	None
Vmodoff =	N/A	None
FMerror% =	10%	1.5%

Locked Low-Noise External FM Accuracy at 5 GHz

Measured Test Results	Specification	Measurement Uncertainty
Vmodon =	N/A	None
Vmodoff =	N/A	None
FMerror% =	10%	1.5%

Locked External FM Accuracy at 20 GHz

Measured Test Results	Specification	Measurement Uncertainty
Vmodon =	N/A	None
Vmodoff =	N/A	None
FMerror% =	10%	1.5%

Locked Low-Noise External FM Accuracy at 20 GHz

Measured Test Results	Specification	Measurement Uncertainty
Vmodon =	N/A	None
Vmodoff =	N/A	None
FMerror% =	10%	1.5%

Locked Internal FM Accuracy at 5 GHz

Measured Test Results	Specification	Measurement Uncertainty
Vmodon =	N/A	None
Vmodoff =	N/A	None
FMerror% =	10%	1.5%

MG369xC	Firmware Revision:	Operator:
Serial Number:	Date:	Options:

Section 4-11 Frequency Modulation Tests (+ Opt. 12 or 28x)

All MG369xC Models with Option 12 or 28x (2 of 6)

Locked Low-Noise Internal FM Accuracy at 5 GHz

Measured Test Results	Specification	Measurement Uncertainty
Vmodon =	N/A	None
Vmodoff =	N/A	None
FMerror% =	10%	1.5%

Locked Internal FM Accuracy at 20 GHz

Measured Test Results	Specification	Measurement Uncertainty
Vmodon =	N/A	None
Vmodoff =	N/A	None
FMerror% =	10%	1.5%

Locked Low-Noise Internal FM Accuracy at 20 GHz

Measured Test Results	Specification	Measurement Uncertainty
Vmodon =	N/A	None
Vmodoff =	N/A	None
FMerror% =	10%	1.5%

Wide External ΦM Accuracy at 5 GHz

Measured Test Results	Specification	Measurement Uncertainty
Vmodon =	N/A	None
Vmodoff =	N/A	None
ΦMerror% =	10%	1.5%

Narrow External ΦM Accuracy at 5 GHz

Measured Test Results	Specification	Measurement Uncertainty
Vmodon =	N/A	None
Vmodoff =	N/A	None
ΦMerror% =	10%	1.5%

MG369xC	Firmware Revision:	Operator:
Serial Number:	Date:	Options:

Section 4-11 Frequency Modulation Tests (+ Opt. 12 or 28x)

All MG369xC Models with Option 12 or 28x (3 of 6)

Wide External ΦM Accuracy at 20 GHz

Measured Test Results	Specification	Measurement Uncertainty
Vmodon =	N/A	None
Vmodoff =	N/A	None
ΦMerror% =	10%	1.5%

Narrow External ΦM Accuracy at 20 GHz

Measured Test Results	Specification	Measurement Uncertainty
Vmodon =	N/A	None
Vmodoff =	N/A	None
ΦMerror% =	10%	1.5%

Wide Internal ΦM Accuracy at 5 GHz

Measured Test Results	Specification	Measurement Uncertainty
Vmodon =	N/A	None
Vmodoff =	N/A	None
ΦMerror% =	10%	1.5%

Narrow Internal ΦM Accuracy at 5 GHz

Measured Test Results	Specification	Measurement Uncertainty
Vmodon =	N/A	None
Vmodoff =	N/A	None
ΦMerror% =	10%	1.5%

Wide Internal ΦM Accuracy at 20 GHz

Measured Test Results	Specification	Measurement Uncertainty
Vmodon =	N/A	None
Vmodoff =	N/A	None
ΦMerror% =	10%	1.5%

MG369xC	Firmware Revision:	Operator:
Serial Number:	Date:	Options:

Section 4-11 Frequency Modulation Tests (+ Opt. 12 or 28x)

All MG369xC Models with Option 12 or 28x (4 of 6)

Narrow Internal ΦM Accuracy at 20 GHz

Measured Test Results	Specification	Measurement Uncertainty
Vmodon =	N/A	None
Vmodoff =	N/A	None
ΦMerror% =	10%	1.5%

Locked External FM Flatness

Function Generator Frequency	MG369xC FM Sensitivity	Vmodoff (dBm)	Vmodon (dBm)	Mod Index	FMflat (dB)	Specification (dB)	Measurement Uncertainty (dB)
10 kHz	10 kHz/V					±1.0	0.07
20 kHz	20 kHz/V					±1.0	0.07
50 kHz	50 kHz/V					±1.0	0.07
99.8 kHz[a]	100 kHz/V				Reference	-	-
200 kHz	200 kHz/V					±1.0	0.07
500 kHz	500 MHz/V					±1.0	0.07
1 MHz	1 MHz/V					±1.0	0.07
9.98 MHz[b]	9.98 MHz/V[c]					±3.0	0.07

a. A potential spurious beat note exists at a 100 kHz rate that can interfere with the carrier frequency null measurement. Therefore, The measurement is performed at a 99.8 kHz rate with a function generator multimeter reading of 0.7070 Vrms.

b. Bandwidth test.

c. VBW set may need to be reduced to 30 Hz to obtain a stable reading.

MG369xC	Firmware Revision:	Operator:
Serial Number:	Date:	Options:

Section 4-11 Frequency Modulation Tests (+ Opt. 12 or 28x)

All MG369xC Models with Option 12 or 28x (5 of 6)

Narrow External ΦM Flatness

Function Generator Frequency	MG369xC ΦM Sensitivity	Vmodoff (dBm)	Vmodon (dBm)	Mod Index	FMflat (dB)	Specification (dB)	Measurement Uncertainty (dB)
10 kHz	1 rad/V					±1.0	0.07
20 kHz	1 rad/V					±1.0	0.07
50 kHz	1 rad/V					±1.0	0.07
99.8 kHz[a]	1 rad/V				Reference	-	-
200 kHz	1 rad/V					±1.0	0.07
500 kHz	1 rad/V					±1.0	0.07
1 MHz	1 rad/V					±1.0	0.07
10 MHz[b]	1 rad/V[c]					±3.0	0.07

a. A potential spurious beat note exists at a 100 kHz rate that can interfere with the carrier frequency null measurement. Therefore, The measurement is performed at a 99.8 kHz rate with a function generator multimeter reading of 0.7070 Vrms.

b. Bandwidth test.

c. VBW set may need to be reduced to 30 Hz to obtain a stable reading.

MG369xC	Firmware Revision:	Operator:
Serial Number:	Date:	Options:

Section 4-11 Frequency Modulation Tests (+ Opt. 12 or 28x)

All MG369xC Models with Option 12 or 28x (6 of 6)

Wide External ΦM Flatness

Function Generator Frequency	MG369xC ΦM Sensitivity	Vmodoff (dBm)	Vmodon (dBm)	Mod Index	FMflat (dB)	Specification (dB)	Measurement Uncertainty (dB)
10 kHz	1 rad/V					±1.0	0.07
20 kHz	1 rad/V					±1.0	0.07
50 kHz	1 rad/V					±1.0	0.07
99.8 kHz[a]	1 rad/V				Reference	–	–
200 kHz	1 rad/V					±1.0	0.07
500 kHz	1 rad/V					±1.0	0.07

a. A potential spurious beat note exists at a 100 kHz rate that can interfere with the carrier frequency null measurement. Therefore, The measurement is performed at a 99.8 kHz rate with a function generator multimeter reading of 0.7070 Vrms.

Unlocked Narrow External FM Accuracy at 5 GHz

FMref (GHz)	FMmod (GHz)	FMerr (%)	Specification (%)	Measurement Uncertainty (%)
			10	0.1

MG369xC	Firmware Revision:	Operator:
Serial Number:	Date:	Options:

Section 4-12 Amplitude Modulation Test (+ Opt. 14 or 28x)

All MG369xC Models with Option 14 or 28x (1 of 4)

External AM Accuracy vs. Frequency at 50% Modulation

DUT Frequency (GHz)	LO Frequency (GHz)	M (%)	Specification (%)	Measurement Uncertainty (±%)
1.0[a]	n/a[a]		45 to 55	1.0 ± 1 Digit
1.4	1.52053		45 to 55	1.0 ± 1 Digit
2.2	2.32053		45 to 55	1.0 ± 1 Digit
2.3	2.42053		45 to 55	1.0 ± 1 Digit
5.0	5.12053		45 to 55	1.0 ± 1 Digit
8.3	8.42053		45 to 55	1.0 ± 1 Digit
8.4	8.52053		45 to 55	1.0 ± 1 Digit
14.0	14.12053		45 to 55	1.0 ± 1 Digit
20.0	20.12053		45 to 55	1.0 ± 1 Digit
23.0	23.12053		45 to 55	1.0 ± 1 Digit
26.5	26.37947		45 to 55	1.0 ± 1 Digit
30.0	29.87947		45 to 55	1.0 ± 1 Digit
33.0	32.87947		45 to 55	1.0 ± 1 Digit
36.0	35.87947		45 to 55	1.0 ± 1 Digit
40.0	39.87947		45 to 55	1.0 ± 1 Digit

a. Measured directly by modulation analyzer.

MG369xC	Firmware Revision:	Operator:
Serial Number:	Date:	Options:

Section 4-12 Amplitude Modulation Test

All MG369xC Models with Option 14 or 28x (2 of 4)

Internal AM Accuracy vs. Frequency at 50% Modulation

DUT Frequency (GHz)	LO Frequency (GHz)	M (%)	Specification (%)	Measurement Uncertainty (±%)
1.0[a]	n/a[a]		45 to 55	1.0 ± 1 Digit
1.4	1.52053		45 to 55	1.0 ± 1 Digit
2.2	2.32053		45 to 55	1.0 ± 1 Digit
2.3	2.42053		45 to 55	1.0 ± 1 Digit
5.0	5.12053		45 to 55	1.0 ± 1 Digit
8.3	8.42053		45 to 55	1.0 ± 1 Digit
8.4	8.52053		45 to 55	1.0 ± 1 Digit
14.0	14.12053		45 to 55	1.0 ± 1 Digit
20.0	20.12053		45 to 55	1.0 ± 1 Digit
23.0	23.12053		45 to 55	1.0 ± 1 Digit
26.5	26.37947		45 to 55	1.0 ± 1 Digit
30.0	29.87947		45 to 55	1.0 ± 1 Digit
33.0	32.87947		45 to 55	1.0 ± 1 Digit
36.0	35.87947		45 to 55	1.0 ± 1 Digit
40.0	39.87947		45 to 55	1.0 ± 1 Digit

a. Measured directly by modulation analyzer.

MG369xC	Firmware Revision:	Operator:
Serial Number:	Date:	Options:

Section 4-12 Amplitude Modulation Test

All MG369xC Models with Option 14 or 28x (3 of 4)

AM Roll Off at 50 kHz Bandwidth

DUT Frequency (GHz)	LO Frequency (GHz)	V_1 Multimeter Reading (Volts)	V_{50} Multimeter Reading (Volts)	Calculated AM_{ro} (dB)	Specification (dB)	Measurement Uncertainty (dB)
1.0[a][b]	n/a[a][b]				±3.00	±0.02
1.4[b]	1.52053[b]				±3.00	±0.02
2.2	2.32053				±3.00	±0.02
2.3	2.42053				±3.00	±0.02
5.0	5.12053				±3.00	±0.02
8.3	8.42053				±3.00	±0.02
8.4	8.52053				±3.00	±0.02
14.0	14.12053				±3.00	±0.02
20.0	20.12053				±3.00	±0.02
23.0	23.12053				±3.00	±0.02
26.5	26.37947				±3.00	±0.02
30.0	29.87947				±3.00	±0.02
33.0	32.87947				±3.00	±0.02
36.0	35.87947				±3.00	±0.02
40.0	39.87947				±3.00	±0.02

a. Measured directly by modulation analyzer.

b. Typical below 2.2 GHz, with option 4 and 15x.

MG369xC	Firmware Revision:	Operator:
Serial Number:	Date:	Options:

Section 4-12 Amplitude Modulation Test

All MG369xC Models with Option 14 or 28x (4 of 4)

AM Flatness

DUT F1 (GHz)	LO F1 (GHz)	V_O (V)	V_1 (V)	V_2 (V)	V_3 (V)	V_4 (V)	V_5 (V)	V_6 (V)	V_7 (V)	V_8 (V)	V_9 (V)	V_{10} (V)	AM_{flat} (dB)	Spec. (dB)	MU (dB)
1.0[a]	n/a[a]													±0.30	±0.02
1.4	1.52053													±0.30	±0.02
2.2	2.32053													±0.30	±0.02
2.3	2.42053													±0.30	±0.02
5.0	5.12053													±0.30	±0.02
8.3	8.42053													±0.30	±0.02
8.4	8.52053													±0.30	±0.02
14.0	14.12053													±0.30	±0.02
20.0	20.12053													±0.30	±0.02
23.0	23.12053													±0.30	±0.02
26.5	26.37947													±0.30	±0.02
30.0	29.87947													±0.30	±0.02
33.0	32.87947													±0.30	±0.02
36.0	35.87947													±0.30	±0.02
40.0	39.87947													±0.30	±0.02

a. Measured directly by modulation analyzer.

MG369xC	Firmware Revision:	Operator:
Serial Number:	Date:	Options:

Section 4-13 Pulse Modulation Tests (+ Opt. 26x or 27)

All MG369xC Models with Option 26x or 27 (1 of 4)

Pulse Rise and Fall Times

DUT Frequency (GHz)	Rise Time (ns)	Fall Time (ns)	Specification (ns)	Measurement Uncertainty (± ns)
0.500 000 001			N/A (Option 4) 10 (Option 5)	0.023
1.200 000 001			N/A (Option 4) 10 (Option 5)	0.023
1.900 000 001			N/A (Option 4) 10 (Option 5)	0.023
5.000 000 001			10	0.023
14.000 000 001			10	0.023
22.000 000 001			10	0.023
28.000 000 001			10	0.023
34.000 000 001			10	0.023
41.000 000 001			10	0.023

Pulse Overshoot

DUT Frequency (GHz)	Overshoot (%)	Specification (%)	Measurement Uncertainty (%)
0.500 000 001		10 (Option 4) 10 (Option 5)	5
1.200 000 001		10 (Option 4) 10 (Option 5)	5
1.900 000 001		10 (Option 4) 10 (Option 5)	5
5.000 000 001		10	5
14.000 000 001		10	5
22.000 000 001		10	5
28.000 000 001		10	5
34.000 000 001		10	5
41.000 000 001		10[a]	5

a. For MG3695C and MG3697C overshoot > 40 GHz is 20% typical at rated power and is not tested.

MG369xC	Firmware Revision:	Operator:
Serial Number:	Date:	Options:

Section 4-13 Pulse Modulation Tests (+ Opt. 26x or 27)

All MG369xC Models with Option 26x or 27 (2 of 4)

Pulse Power Accuracy (Pulse Width ≥ 1 μs)

DUT Frequency (GHz)	V_{ref} (Volts)	V_{pulse} (Volts)	$P_{accuracy}$ (dB)	Specification (dB)	Measurement Uncertainty (dB)
0.050 000 001				±0.5	0.1
1.200 000 001				±0.5	0.1
1.900 000 001				±0.5	0.1
5.000 000 001				±0.5	0.1
14.000 000 001				±0.5	0.1
22.000 000 001				±0.5	0.1
28.000 000 001				±0.5	0.1
34.000 000 001				±0.5	0.1
41.000 000 001				±0.5	0.1

Pulse Power Accuracy (Pulse Width < 1 μs)

DUT Frequency (GHz)	V_{ref} (Volts)	V_{pulse} (Volts)	$P_{accuracy}$ (dB)	Specification (dB)	Measurement Uncertainty (dB)
2.200 000 001				±1.0	0.1
5.000 000 001				±1.0	0.1
14.000 000 001				±1.0	0.1
22.000 000 001				±1.0	0.1
28.000 000 001				±1.0	0.1
34.000 000 001				±1.0	0.1
41.000 000 001				±1.0	0.1

MG369xC	Firmware Revision:	Operator:
Serial Number:	Date:	Options:

Section 4-13 Pulse Modulation Test (+ Opt. 26x or 27)

All MG369xC Models with Option 26x or 27 (3 of 4)

Pulse On/Off Ratio

DUT Frequency (GHz)	P_{depth} (dB)	Specification (dB)[a]	Measurement Uncertainty (dB)
0.010		–80	0.9
1.0		–80	0.9
1.4		–80	0.9
2.0		–80	0.9
2.2		–80	1.0
2.3		–80	1.0
5.0		–80	1.7
8.3		–80	2.6
8.4		–80	2.6
14.0		–80	2.5
20.0		–80	2.5
23.0		–80	3.3
26.5		–80	3.3
30.0		–80	3.1
33.0		–80	3.2
36.0		–80	3.2
40.0[b]		–80	3.2
50.0[b]		–80	3.2

a. For models with Option 15x, specification is 70 dB

b. Must change RBW and VBW to 300 Hz.

MG369xC	Firmware Revision:	Operator:
Serial Number:	Date:	Options:

Section 5-7 Preliminary Calibration

Procedure Step	Step Completion
1. Internal DVM Calibration (calterm119)	
2. Coarse Loop Pre-tune DAC Calibration (calterm 137)	
3. Sweep Time DAC Calibration (calterm 132)	
4. If Option 6 is Installed then YIG Offset Calibration (calterm 134)	
5. YIG Frequency Linearizer DACs Calibration (calterm 127)	
6. 10 MHz Reference Oscillator Calibration (calterm 130)	
7. Ramp Center DAC Calibration (calterm 129)	
8. Sweep Width DAC Calibration (calterm 133)	
9. Center Frequency DAC Calibration (calterm 114)	
10. Store the Calibration Data (calterm 787)	

MG369xC	Firmware Revision:	Operator:
Serial Number:	Date:	Options:

Section 5-8 Frequency Synthesis Test (1 of 3)

MG3691C	
Coarse Loop[a]	
2.000 000 000 00	
5.000 000 000 00	
8.000 000 000 00	
10.000 000 000 00	
Fine Loop[b]	
2.000 000 100 00	
2.000 000 200 00	
2.000 000 300 00	
2.000 000 400 00	
2.000 000 500 00	
2.000 000 600 00	
2.000 000 700 00	
2.000 000 800 00	
2.000 000 900 00	
2.000 001 000 00	

MG3692C	
Coarse Loop[a]	
2.000 000 000 00	
5.000 000 000 00	
8.000 000 000 00	
11.000 000 000 00	
14.000 000 000 00	
17.000 000 000 00	
20.000 000 000 00	
Fine Loop[b]	
2.000 000 100 00	
2.000 000 200 00	
2.000 000 300 00	
2.000 000 400 00	
2.000 000 500 00	
2.000 000 600 00	
2.000 000 700 00	
2.000 000 800 00	
2.000 000 900 00	
2.000 001 000 00	

a. Tolerance for all frequencies listed above is ±10 Hz. All frequencies are in GHz.

b. Tolerance for all frequencies listed above is ±100 Hz. All frequencies are in GHz.

MG369xC	Firmware Revision:	Operator:
Serial Number:	Date:	Options:

Section 5-8 Frequency Synthesis Test (2 of 3)

MG3693C	
Coarse Loop[a]	
2.000 000 000 00	
5.000 000 000 00	
8.000 000 000 00	
11.000 000 000 00	
14.000 000 000 00	
17.000 000 000 00	
20.000 000 000 00	
23.000 000 000 00	
26.000 000 000 00	
29.000 000 000 00	
30.000 000 000 00	
Fine Loop[b]	
2.000 000 100 00	
2.000 000 200 00	
2.000 000 300 00	
2.000 000 400 00	
2.000 000 500 00	
2.000 000 600 00	
2.000 000 700 00	
2.000 000 800 00	
2.000 000 900 00	
2.000 001 000 00	

MG3694C	
Coarse Loop[a]	
2.000 000 000 00	
5.000 000 000 00	
8.000 000 000 00	
11.000 000 000 00	
14.000 000 000 00	
17.000 000 000 00	
20.000 000 000 00	
23.000 000 000 00	
26.000 000 000 00	
29.000 000 000 00	
32.000 000 000 00	
35.000 000 000 00	
38.000 000 000 00	
40.000 000 000 00	
Fine Loop[b]	
2.000 000 100 00	
2.000 000 200 00	
2.000 000 300 00	
2.000 000 400 00	
2.000 000 500 00	
2.000 000 600 00	
2.000 000 700 00	
2.000 000 800 00	
2.000 000 900 00	
2.000 001 000 00	

a. Tolerance for all frequencies listed above is ±10 Hz. All frequencies are in GHz.

b. Tolerance for all frequencies listed above is ±100 Hz. All frequencies are in GHz.

MG369xC	Firmware Revision:	Operator:
Serial Number:	Date:	Options:

Section 5-8 Frequency Synthesis Test (3 of 3)

MG3695C	
Coarse Loop[a]	
2.000 000 000 00	
5.000 000 000 00	
8.000 000 000 00	
11.000 000 000 00	
14.000 000 000 00	
17.000 000 000 00	
20.000 000 000 00	
23.000 000 000 00	
26.000 000 000 00	
29.000 000 000 00	
32.000 000 000 00	
35.000 000 000 00	
38.000 000 000 00	
40.000 000 000 00	
50.000 000 000 00[3]	
Fine Loop[c]	
2.000 000 100 00	
2.000 000 200 00	
2.000 000 300 00	
2.000 000 400 00	
2.000 000 500 00	
2.000 000 600 00	
2.000 000 700 00	
2.000 000 800 00	
2.000 000 900 00	
2.000 001 000 00	

MG3697C	
Coarse Loop[a]	
2.000 000 000 00*	
5.000 000 000 00	
8.000 000 000 00	
11.000 000 000 00	
14.000 000 000 00	
17.000 000 000 00	
20.000 000 000 00	
23.000 000 000 00	
26.000 000 000 00	
29.000 000 000 00	
32.000 000 000 00	
35.000 000 000 00	
38.000 000 000 00	
40.000 000 000 00	
65.000 000 000 00[b]	
Fine Loop[c]	
2.000 000 100 00	
2.000 000 200 00	
2.000 000 300 00	
2.000 000 400 00	
2.000 000 500 00	
2.000 000 600 00	
2.000 000 700 00	
2.000 000 800 00	
2.000 000 900 00	
2.000 001 000 00	

a. Tolerance for all frequencies listed above is ±10 Hz. All frequencies are in GHz.

b. Only if test equipment capable of taking the measurement is available.

c. Tolerance for all frequencies listed above is ±100 Hz. All frequencies are in GHz.

MG369xC	Firmware Revision:	Operator:
Serial Number:	Date:	Options:

Section 5-9 Switched Filter Shaper Calibration

Procedure Step	Step Completion
Log Amplifier Zero Calibration 1. Log Amplifier Zero Calibration (calterm 115)	
Limiter DAC Adjustment (MG369_B with Option 15) 2. Limiter DAC Adjustment (calterm 145)	
Shaper DAC Adjustment 3. Shaper DAC Adjustment (calterm 138) 4. Store the Calibration Data (calterm 787)	

Section 5-10 RF Level Calibration

This calibration is performed using an automatic test system. Contact Anritsu Customer Service for further information.

Section 5-11 ALC Bandwidth Calibration

Procedure Step	Step Completion
1. ALC Bandwidth Calibration (Calterm 110)	
2. Store the Calibration Data (calterm 787)	

Section 5-12 ALC Slope Calibration

Procedure Step	Step Completion
1. ALC Slope Calibration (slpcal)	
2. Store the Calibration Data (calterm 787)	

MG369xC	Firmware Revision:	Operator:
Serial Number:	Date:	Options:

Section 5-13 AM Calibration

Procedure Step	Step Completion
1. Linear AM Calibration (calterm 112)	
2. Linear AM Calibration SDM (calterm 172)	
3. Log AM Calibration (calterm 113)	
4. Log AM Calibration SDM (calterm 173)	
5. AM Function Generator Calibration (calterm 146)	
6. AM Meter Calibration (calterm 147)	
7. Store the Calibration Data (calterm 787)	

Section 5-14 FM Calibration

Procedure Step	Step Completion
1. FM Variable Gain Linearity Calibration (calterm 148)	
2. FM Narrow Mode Sensitivity Calibration (calterm 125)	
3. ΦM External Wide Sensitivity Calibration (calterm 149)	
4. ΦM External Narrow Sensitivity Calibration (calterm 150)	
5.ΦM Wide Flatness Calibration (calterm 155)	
6. ΦM Narrow Flatness Calibration (calterm 156)	
7. FM Meter Calibration (calterm 123)	
8. FM Function Generator Calibration (calterm 154)	
9. Store the Calibration Data (calterm 787)	

Appendix C — Technical Data Sheet

C-1 MG369xC Technical Data Sheet

The latest version of the MG369xC RF/Microwave Signal Generators Technical Data Sheet, Anritsu PN: 11410-00515, can be downloaded from the Anritsu Internet site:

http://www.anritsu.com

The data sheet provides performance specifications for all models in the MG369xC series.

Index

A

A2 Microprocessor PCB 7-9
A3 Reference PCB 7-10
A4 Coarse Loop PCB 7-11
A5 to A9 PCB 7-13
A9 YIG Assembly 2-2
Adapter, Attenuator and Cable Insertion Loss . . A-1
ALC 2-12
ALC and Modulation Subsystem
    Block Diagram 2-7, 2-8
    Troubleshooting 6-20
ALC Loop Operation 2-12
ALC Slope 2-13
ALC/AM/Pulse Modulator 2-2
AM Calibration 5-28
AM Flatness 4-49
AM Roll Off 4-47
Amplitude Modulation 2-13
Amplitude Modulation Tests 4-44
Analog Sweep Mode 2-11
Anritsu, contact 1-2
Attenuator 2-17
Auxiliary
    Troubleshooting 6-19

C

Calibration 5-1
    ALC Slope Calibration 5-23
    Alternate Reference Calibration 5-11
    AM Calibration 5-27
    Bandwidth 5-23
    FM Calibration 5-30
    Initial Setup 5-6
    Limiter 5-16
    Log Amplifier 5-16
    Preliminary Calibration 5-9
    Shaper 5-17
    Subassembly Replacement 5-5
    Switched Filter Shaper 5-15
    Test Equipment 5-1
Chassis Cover 7-6
Coarse Loop
    Testing 5-13
    Troubleshooting 6-17
Contacting Anritsu 1-2
contacting Anritsu 1-2

D

Diagnostics
    Internal Self-Test 6-1
Digital Control 2-1
Digital Down Converter 2-15
Doubler Module 2-16
Down Converter 2-15
    Functional Description 2-15
    Troubleshooting 6-18
DVM
    Troubleshooting 6-14

E

Error Messages 6-1, 6-4
    Error Message Index 6-2
    Operation Related 6-6
    Self-Test 6-1
ESD Requirements 1-3, 6-1
External Leveling 2-12

F

Fine Loop
    PCB 7-10
    Testing 5-13
    Troubleshooting 6-15
Flatness Test 4-19
FM PCB Troubleshooting 6-19
Frequency Modulation 2-11
Frequency Synthesis 2-2, 2-6
Front Panel Assembly 2-1, 7-8

H

Harmonic test 3-12, 4-10

I

Identification Number 1-1
Inputs/Outputs 2-3
Internal AM Accuracy 4-46
Internal Time Base Aging Rate Test 3-9

L

Level Accuracy 4-19
Level Flatness 4-25
Links
    contacting Anritsu 1-2

M

Maintenance 1-3
Measurement Uncertainty 3-6, 4-7
Messages
    Status 6-6
    Warning 6-6
Modulation Index Calculations 3-51, 4-40
Motherboard/Interconnections 2-3

N

N5531S 3-1
Normal Operation Error 6-4

O

Online Manual 1-1

P

PC Setup 5-7
Performance Verification
Using N5531S Measuring Receiver 3-1
Using standard test equipment 4-1
Phase Modulation 2-11
Power Level Accuracy 4-19
Power Supply 2-2, 7-17
Power Sweep 2-13
Preventive Maintenance 1-3
Pulse Generator 2-13
Pulse Modulation Operation 2-13
Pulse On/Off Ratio 3-70, 4-56
Pulse Power Accuracy 3-68, 4-54

Q

Quadrupler Module 2-16

R

Related Manuals 1-2
Replaceable Parts 7-1
Replacement Parts 5-5
RF Deck 2-2, 2-14
RF Outputs 2-10
RF Signal Filtering 2-14

S

Safety Symbols Safety-1
Self-Test Error Messages-Index 6-2
Single Sideband Phase Noise 3-16, 4-14
Spurious Signals Test 3-12, 4-10
SQM Operation 2-16
Startup Configuration 1-5
Step Sweep Mode 2-12

T

Test Equipment 1-6, 3-2, 5-1
Test Equipment List
Calibration 5-1
RF Level Calibration 5-18
Testing with N5531S Equipment 3-2
Testing with Standard Equipment 4-2
Test Records
ALC Bandwidth Calibration A-145, B-93
ALC Slope Calibration A-145, B-93
AM Calibration A-146, B-94
Amplitude Modulation A-135, B-82
FM Calibration A-146, B-94
Frequency Modulation A-129, B-76
Frequency Synthesis A-142, B-90
Harmonic Testing A-3, B-3
Internal Time Base Aging Rate A-2, B-2
Maximum Leveled Power A-120, B-69
Non-Harmonic Testing A-8, B-12
Power Level Accuracy A-59, B-51
Power Level Flatness A-114, B-65
Power Level Log Conformity A-51, B-49
Preliminary Calibration A-141, B-89
Pulse Modulation A-138, B-86
RF Level Calibration A-145, B-93
SSB Phase Noise (S/N 103313 and Lower) . A-15, B-13
SSB Phase Noise (S/N 103314 and Higher) A-33, B-31
Switched Filter Shaper Calibration A-145, B-93
Testing with N5531S vs standard equipment . . . 1-1
Troubleshooting 6-1, 6-7
ALC 6-20
Auxiliary PCB 6-19

U

URL contacting Anritsu 1-2

W

Warning/Status Messages 6-4
Website, Contacting Anritsu 1-2

Y

YIG Loop Testing 5-13
YIG-tuned Oscillator 2-14

Anritsu prints on recycled paper with vegetable soybean oil ink.

Anritsu Company
490 Jarvis Drive
Morgan Hill, CA 95037-2809
USA
http://www.anritsu.com